SECTION 7A

MANUAL TRANSMISSION

CONTENTS

General Description 7A-2
On-Vehicle Service..... 7A-3
Maintenance Service..... 7A-3
Oil change 7A-3
Rear Gear Shift Control..... 7A-4
Unit Repair Overhaul 7A-7
Dismounting Unit..... 7A-7
Remounting Unit 7A-8
Disassembling Unit 7A-9
Front gear shift control 7A-10
Extension case 7A-10
Transmission case 7A-10
Countershaft..... 7A-11
Input shaft and main shaft 7A-12
Shift shafts and forks..... 7A-14
Assembling Unit 7A-19
Main shaft and input shaft..... 7A-19
Countershaft and reverse idle gear..... 7A-23
Shift shafts and forks..... 7A-25
Transmission lower case and upper case..... 7A-26
Extension case..... 7A-27
Input shaft bearing retainer 7A-28
Clutch release bearing 7A-28
Input shaft 7A-29
Front gear shift control 7A-29
Tightening Torque Specification 7A-30
Required Service Material 7A-31
Special Tool..... 7A-32

General Description

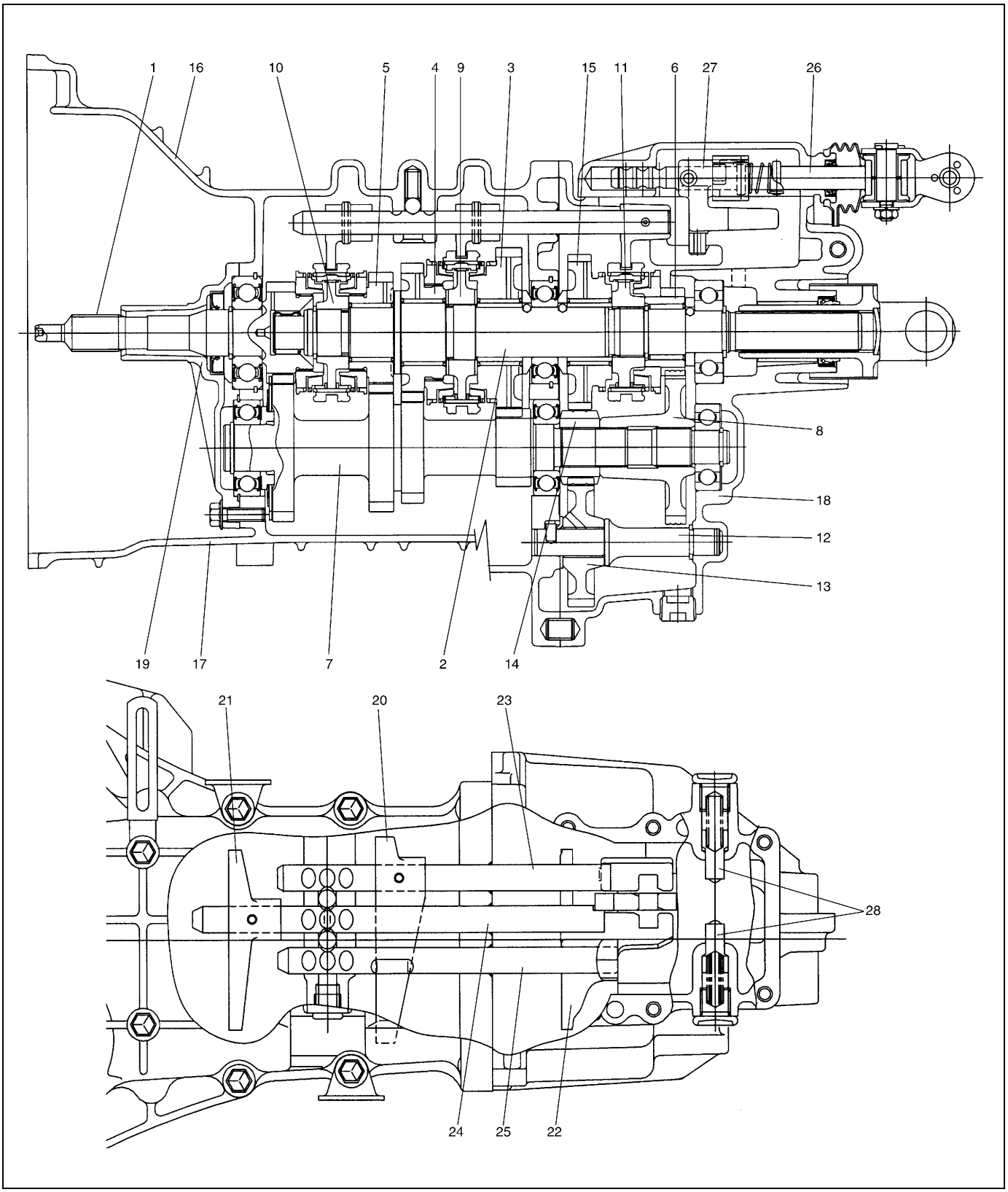

1. Input shaft	8. Countershaft 5th gear	15. Main shaft reverse gear	22. Reverse gear shift fork
2. Main shaft	9. Low speed synchronizer hub	16. Upper case	23. Low speed gear shift shaft
3. Main shaft low gear	10. High speed synchronizer hub	17. Lower case	24. High speed gear shift shaft
4. Main shaft 2nd gear	11. 5th speed synchronizer hub	18. Extension case	25. Reverse gear shift shaft
5. Main shaft 3rd gear	12. Reverse gear shaft	19. Input shaft bearing retainer	26. Gear shift front shaft
6. Main shaft 5th gear	13. Reverse idle gear	20. Low speed gear shift fork	27. Gear shift front arm
7. Countershaft	14. Countershaft reverse gear	21. High speed gear shift fork	28. Select guide pin

On-Vehicle Service

Maintenance Service

Oil change

1) Before changing or inspecting oil, be sure to stop engine and lift vehicle horizontally.
2) With vehicle lifted up, check oil level and leakage. If leakage exists, correct or repair it.
3) Drain old oil and pour new specified oil as shown below by specified amount (roughly up to level hole).

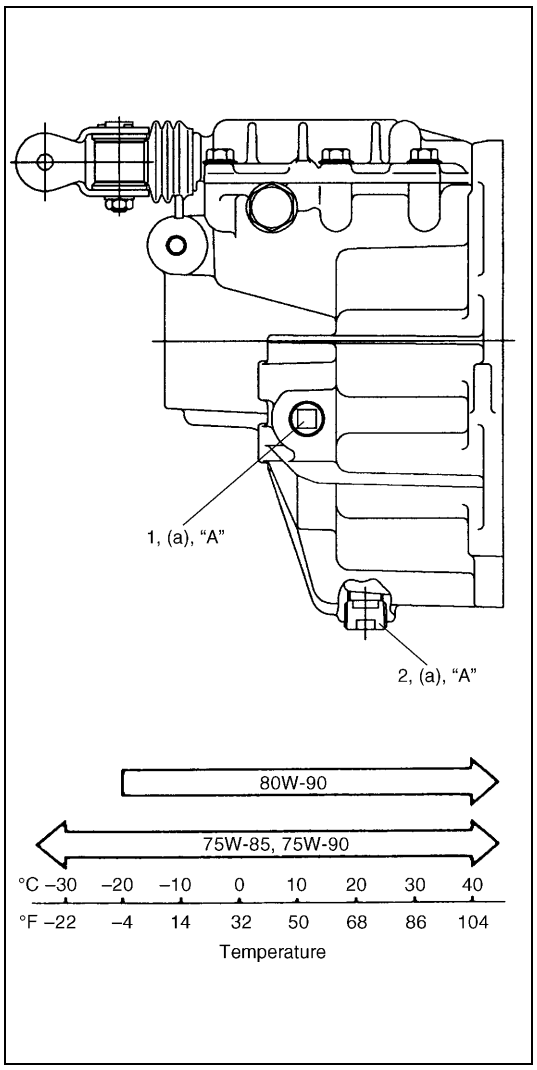

NOTE:

- **It is highly recommended to use SAE 75W-90 gear oil.**
- **Whenever vehicle is hoisted for any service work other than oil change, also be sure to check for oil leakage.**
- **If water or rust is mixed in drained oil, be sure to check boot of transmission.**

Transmission oil
API GL-4
For SAE classification, refer to viscosity chart in the figure.

Transmission oil capacity
1.3 liters (2.75/2.29 US/Imp. pt)

4) Torque drain plug (2) and level / filler plug (1) as specified below after applying sealant to its thread.

CAUTION:
Transmission oil must not be poured through gear shift control lever part.

"A" : Sealant 99000-31110

Tightening torque
Transmission oil filler and drain plugs
(a) : 23 N·m (2.3 kg-m, 17.0 lb-ft)

Rear Gear Shift Control

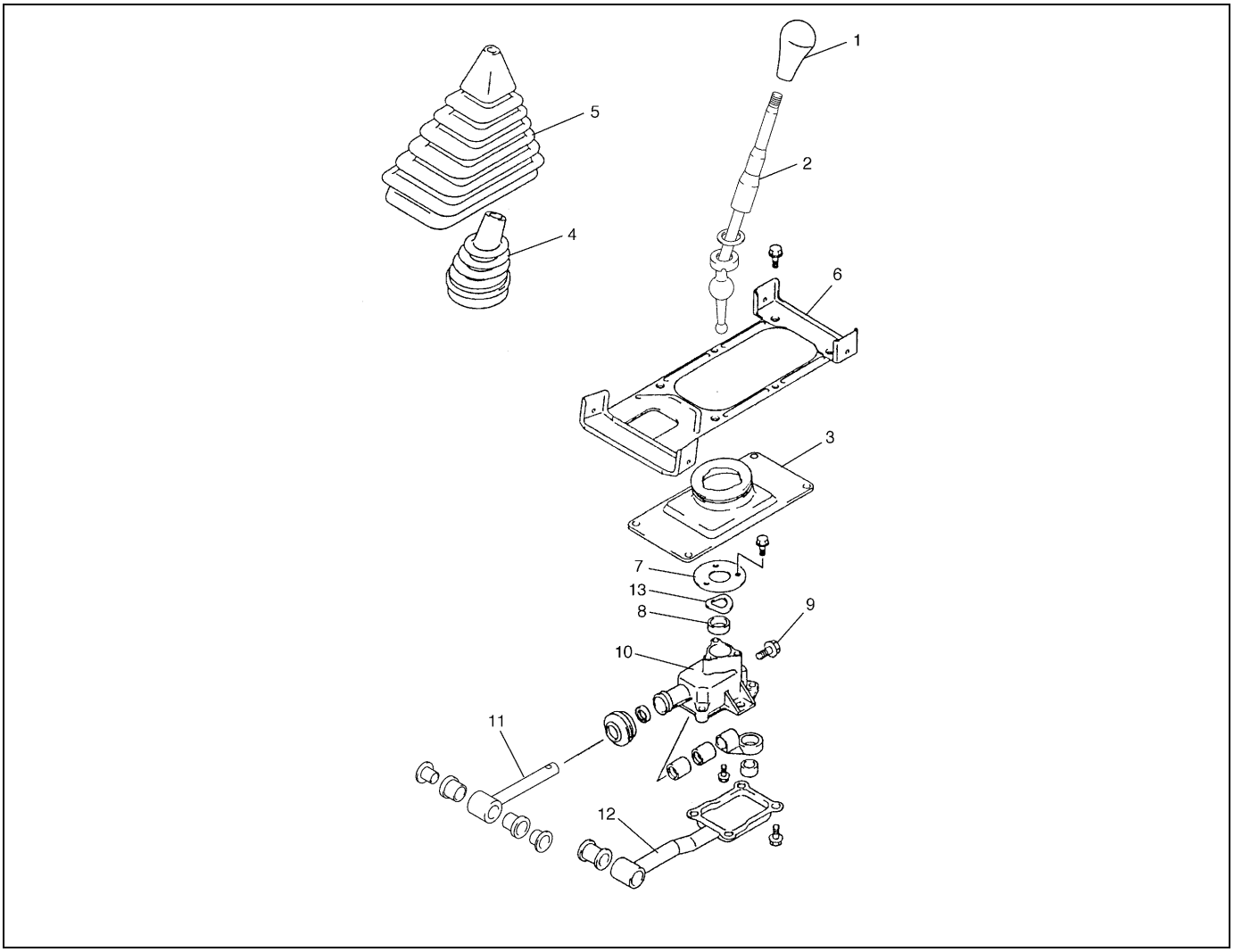

1. Gear shift knob	5. Gear shift lever boot No.3	9. Gear control select bolt	13. Gear shift control seat spring
2. Gear shift lever	6. Gear shift lever boot cover	10. Gear shift lever case	
3. Gear shift lever boot No.1	7. Gear shift lever plate	11. Gear shift rear shaft	
4. Gear shift lever boot No.2	8. Gear shift control lower seat	12. Extension rod	

REMOVAL

1) Remove shift knob and remove center console box with shift lever boot No.3

2) Pull out shift lever boot No.2 (3) and remove shift lever boot cover (1) and shift lever boot No.1 (2).

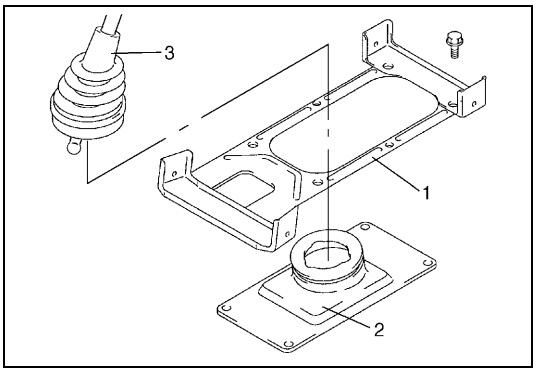

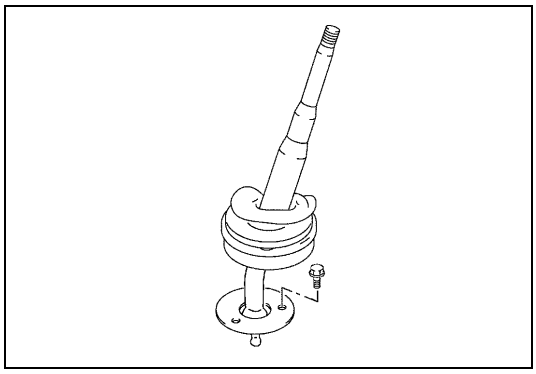

3) Remove 3 bolts, and then remove shift lever case plate, shim, spring and shift lever.

4) Hoist vehicle and drain transmission oil.
5) Remove exhaust No.1 pipe, refer to “Component” in Section 6K.
6) Remove propeller shaft No.1 (and No.2, if equipped for 4WD), refer to “Propeller Shafts” in Section 4B.

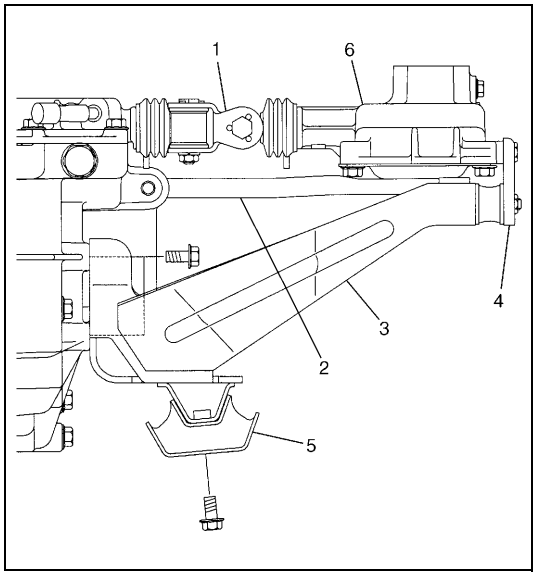

7) Remove gear shift control joint bolt and extension rod bolt.
8) Apply transmission jack and remove rear mounting bracket (3) with gear shift case mounting bracket (4) and engine rear mounting (5).
9) Remove rear gear shift control assembly (6).

1.	Gear shift control joint
2.	Extension rod

INSPECTION

- Check that gear shift control lever moves smoothly without abnormal noise.
- Check bushes and boot for damage and deterioration.

INSTALLATION

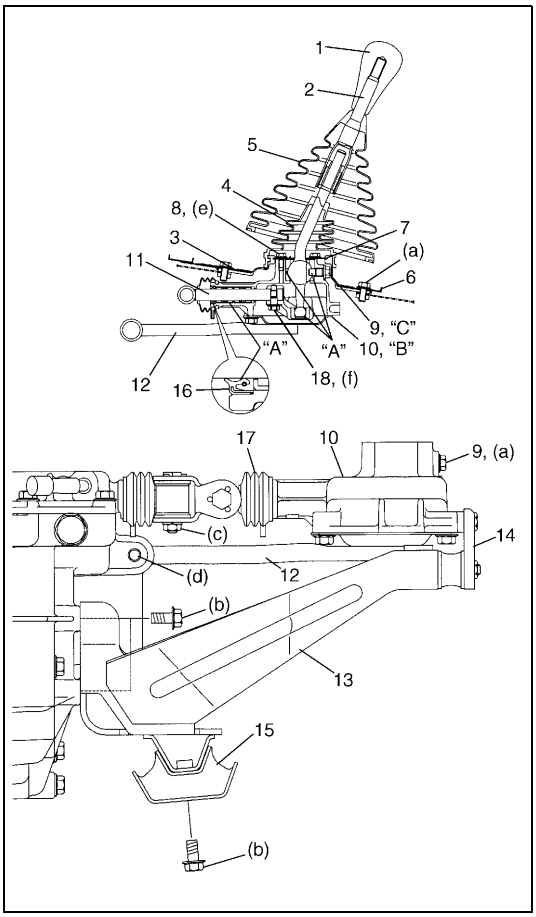

Install in reverse order of removal procedure noting following points.

“A” : Grease 99000-25010
“B” : Sealant 99000-31110
“C” : Cement 99000-32110

- Press fit oil seal, referring to figure for installing direction.
- Make breather of boot face downward as shown in figure.
- Torque bolts to specifications, as given below.

Tightening torque
Gear shift control boot cover bolts
(a) : 23 N·m (2.3 kg-m, 17.0 lb-ft)
Transmission rear mounting bolts
(b) : 25 N·m (2.5 kg-m, 18.0 lb-ft)
Control shaft joint nuts
(c) : 18 N·m (1.8 kg-m, 13.0 lb-ft)
Extension rod joint bolt
(d) : 35 N·m (3.5 kg-m, 25.5 lb-ft)
Gear shift lever plate bolts
(e) : 5.5 N·m (0.55 kg-m, 4.0 lb-ft)
Gear shift rear arm bolt
(f) : 34 N·m (3.4 kg-m, 24.5 lb-ft)

- When installing propeller shaft(s), refer to “Propeller Shafts” in Section 4B.
- When installing exhaust No.1 pipe, refer to “Component” in Section 6K.
- After connecting clutch cable, adjust clutch pedal free travel, refer to “Maintenance Service” in Section 7C.

1. Gear shift knob	10. Gear shift lever case
2. Gear shift lever	11. Gear shift rear shaft
3. Gear shift lever boot No.1	12. Extension rod
4. Gear shift lever boot No.2	13. Rear mounting bracket
5. Gear shift lever boot No.3	14. Gear shift case mounting bracket
6. Gear shift lever boot cover	15. Engine rear mounting
7. Gear shift lever plate	16. Oil seal
8. Gear shift lever plate bolt	17. Boot
9. Gear control select bolt	18. Gear shift rear arm bolt

Unit Repair Overhaul

Dismounting Unit

1) Disconnect negative cable at battery.
2) Remove shift lever and rear gear shift control assembly, refer to “Rear Gear Shift Control Removal” in this section.

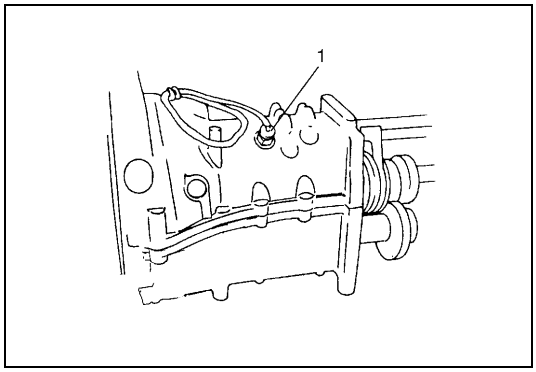

3) Disconnect back up lamp switch lead wire at coupler respectively.
4) Remove starting motor from transmission case, refer to “Starting Motor” of Section 6G.

1. Back up lamp switch

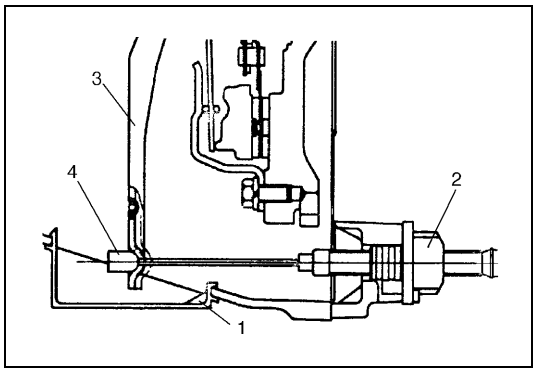

5) Remove clutch housing cap (1) and disconnect clutch cable (4) from clutch release fork (3).

2. Clutch cable nut

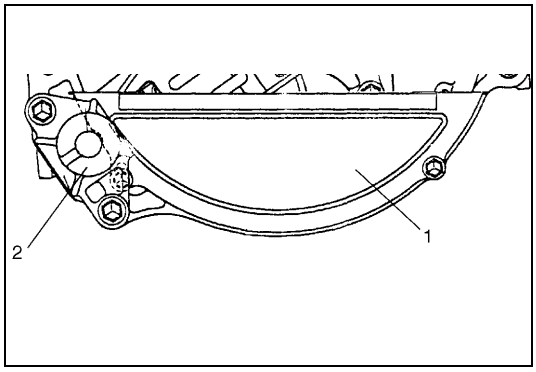

6) Remove clutch cable bracket (2) and clutch housing lower plate (1) from transmission case.

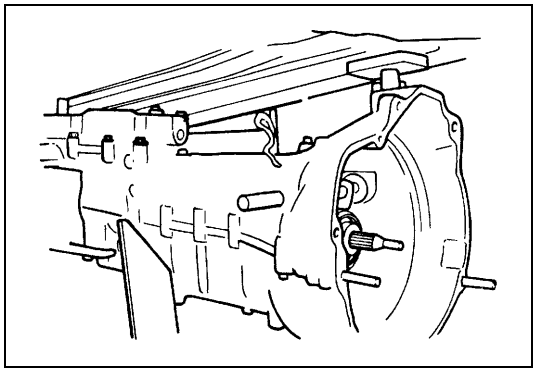

7) Remove bolts and nuts fastening engine cylinder block and transmission case and separate transmission from engine.
8) Take down transmission.
9) Remove clutch cover, disc and flywheel referring to “Clutch Cover, Clutch Disc, Flywheel and Release Bearing” in Section 7C.

Remounting Unit

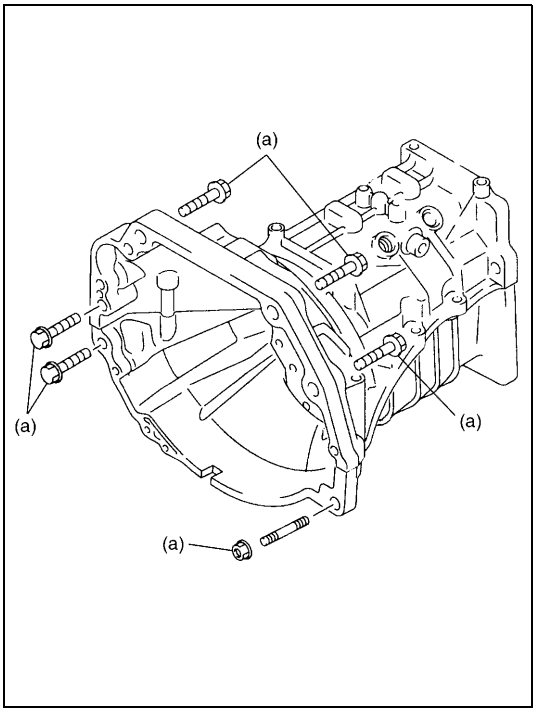

For remounting, reverse dismounting procedure.

- When installing flywheel, clutch cover and disc, refer to “Clutch Cover, Clutch Disc, Flywheel and Release Bearing” in Section 7C.
  Use specified torques as given below.

Tightening torque
Transmission to engine bolts and nut
(a) : 94 N·m (9.4 kg-m, 68.0 lb-ft)

- For tightening torques not mentioned above, refer to “Tightening Torque Specification” at the end of this section.
- Connecting clutch cable, refer to “Maintenance Service” in Section 7C in this manual for details.
- When installing starting motor, refer to “Starting Motor” in Section 6G.
- When installing rear gear shift control assembly and shift lever, refer to “Rear Gear Shift Control” in this section.
- Pour transmission oil according to “Maintenance Service” in this section.

Disassembling Unit

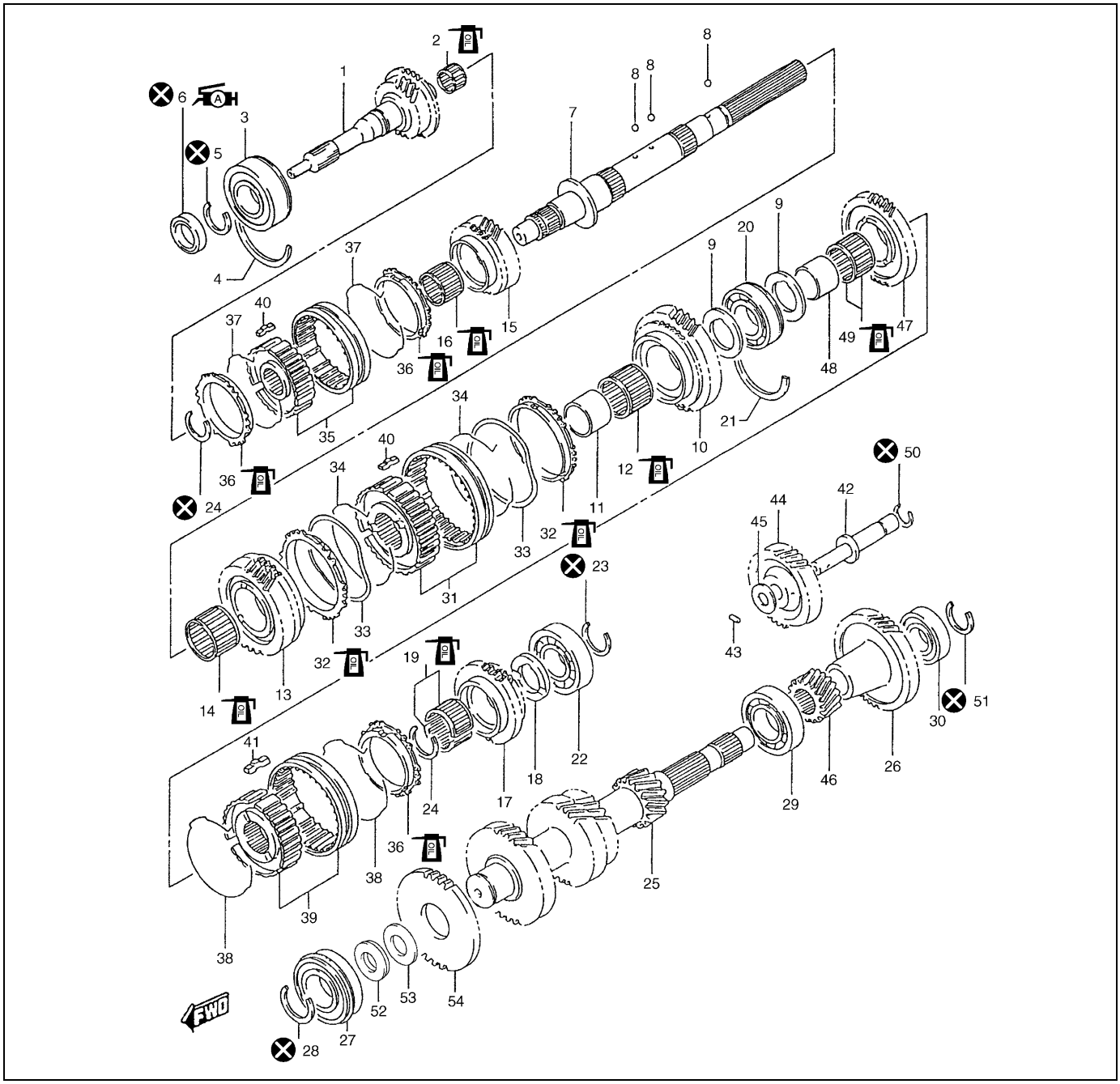

1. Input shaft	15. 3rd gear	30. Rear bearing	45. Washer
2. Input shaft bearing	16. 3rd gear needle bearing	31. Low speed synchronizer hub assembly	46. Countershaft reverse gear
3. Front bearing	17. 5th gear	32. Low speed synchronizer ring	47. Main shaft reverse gear
4. C-ring	18. 5th gear washer	33. Low speed synchronizer spring	48. Gear bush
5. Circlip	19. 5th gear needle bearing	34. Synchronizer spring	49. Needle bearing
6. Oil seal : Apply grease 99000-25010 to oil seal lip	20. Main shaft bearing	35. High speed synchronizer hub assembly	50. Snap ring
	21. C-ring	36. High speed synchronizer ring	51. Circlip
7. Main shaft	22. Main shaft rear bearing	37. Synchronizer spring	52. Friction gear retainer
8. Main shaft washer ball	23. Circlip	38. Synchronizer spring	53. Friction spring
9. Main shaft bearing washer	24. Circlip	39. 5th speed synchronizer hub assembly	54. Friction gear
10. Low gear	25. Countershaft	40. Synchronizer key	Do not reuse.
11. Gear bush	26. Countershaft 5th gear	41. Synchronizer key	Apply transmission oil.
12. Needle bearing	27. Front bearing	42. Reverse gear shaft	
13. 2nd gear	28. Circlip	43. Pin	
14. Needle bearing	29. Center bearing	44. Reverse idle gear	

Front gear shift control

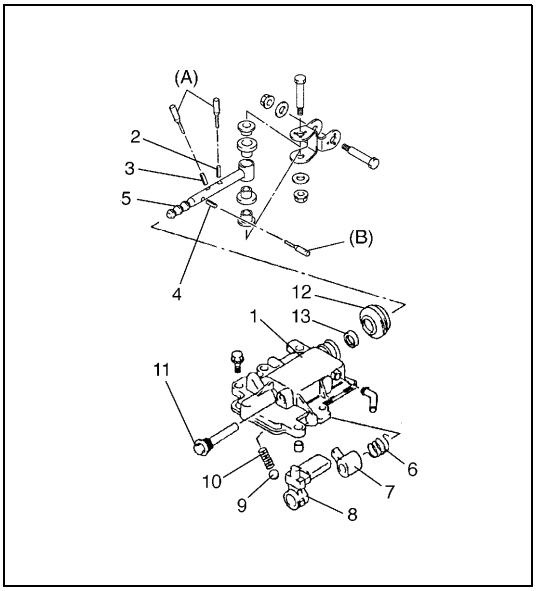

1) Remove gear shift lever front case (1).
2) Remove reverse gear shift limit bolt (11).
3) Remove shift front arm pin (4), shift limit spring pin (2) and shift limit yoke pin (3) by using special tools.

Special tool
(A) : 09922-85811
(B) : 09925-78210

4) Pull out gear shift shaft (5), and then remove limit spring (6), limit yoke (7) and shift front arm (8).

NOTE:

Ball (9) and spring (10) will jump out when disconnecting gear shift shaft.

5) Remove boot (12) and oil seal (13).

Extension case

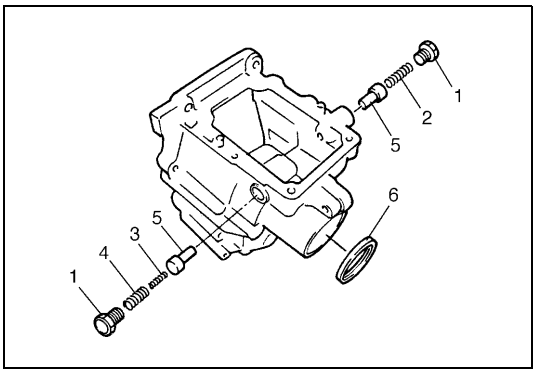

1) Remove select return spring bolts (1), return springs and select guide pins (5).
2) Remove bolts securing extension case to transmission case, and then take off extension case.
3) Remove extension case seal (6) as necessary.

2. Low select return spring	4. Reverse select return spring (outer)
3. Reverse select return spring (inner)	

Transmission case

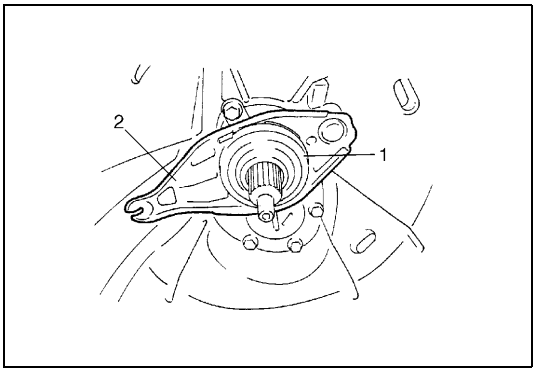

1) Remove clutch release bearing (1) and release fork (2).
2) Remove input shaft bearing retainer bolts and pull out retainer.
3) Take out oil seal from input shaft bearing retainer as necessary.

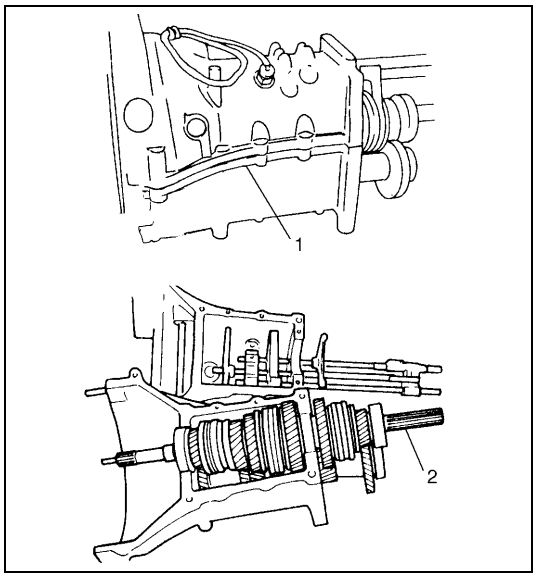

4) Remove bolts fastening upper and lower cases together, separate the two, and take out main shaft assembly (2).
Using a screwdriver or the like can be used to pry two cases apart, as shown. In such a case, do not stick screwdriver too far into between two mating faces, or faces may get damaged.

1. Pry Point

Countershaft

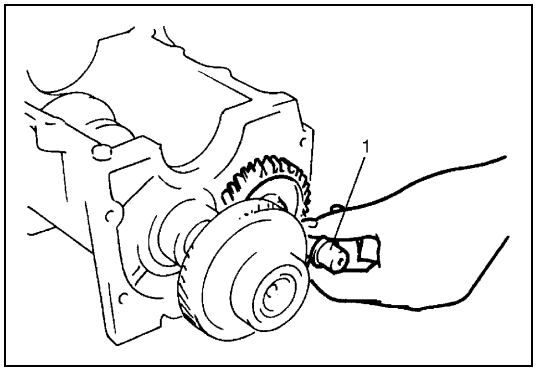

1) Remove reverse idle gear shaft (1) with gear.

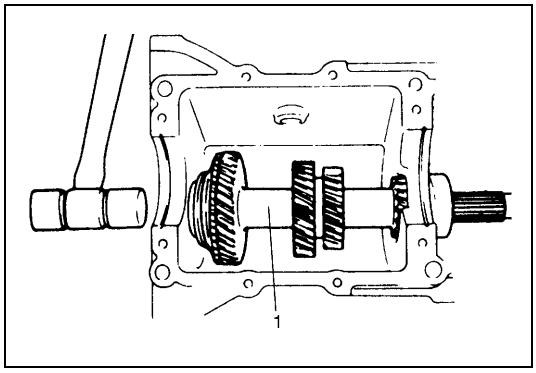

2) Remove outside circlip of countershaft front bearing.
3) Using plastic hammer, drive countershaft (1) rearward.

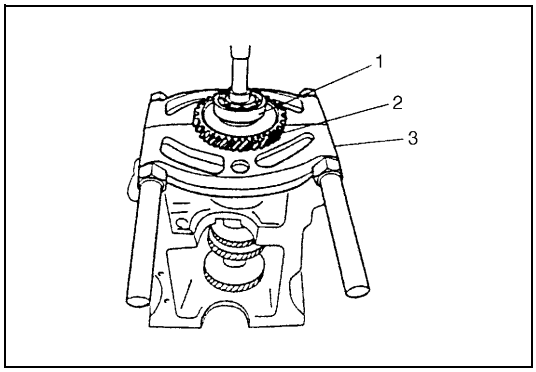

CAUTION:
Be sure to set flat face of puller against 5th gear so as not to cause damage to teeth.

4) Remove countershaft rear bearing (1) and 5th gear (2) with puller (3) and hydraulic press.

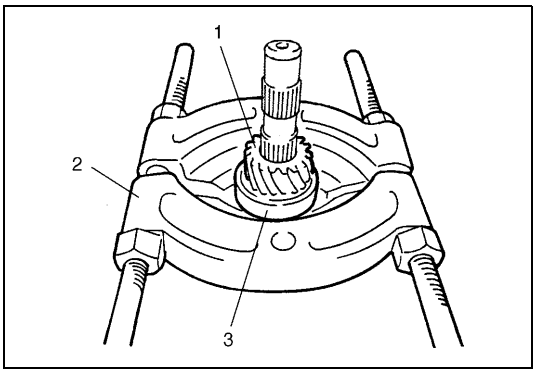

5) Remove countershaft reverse gear (1) and center bearing (3) with puller (2) and hydraulic press.
6) Remove countershaft from lower case.

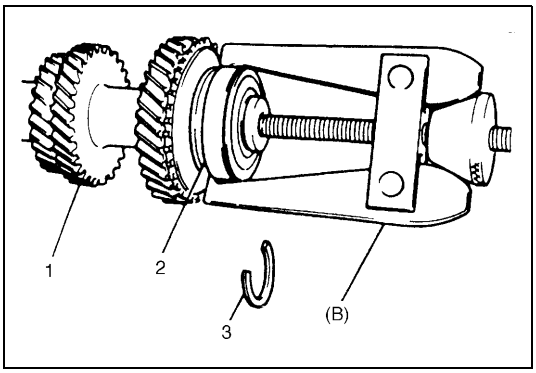

7) Remove circlip (3) of countershaft front bearing (2) and pull out bearing by using special tool.

Special tool
(B) : 09913-60910

1. Countershaft	

Input shaft and main shaft

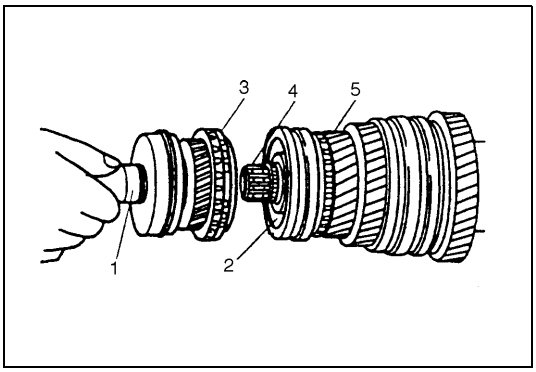

1) Take out input shaft (1) by hand, taking care not to let high-speed synchronizer ring (3) fall off.

2. Main shaft	5. 3rd gear
4. Bearing	

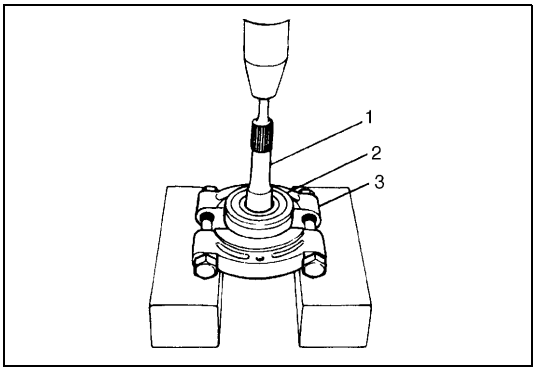

2) Remove circlip of input shaft (1) and pull out bearing (2) with puller (3) and hydraulic press as necessary.

NOTE:

Sealed bearing must not be washed. Replace it with new one when required.

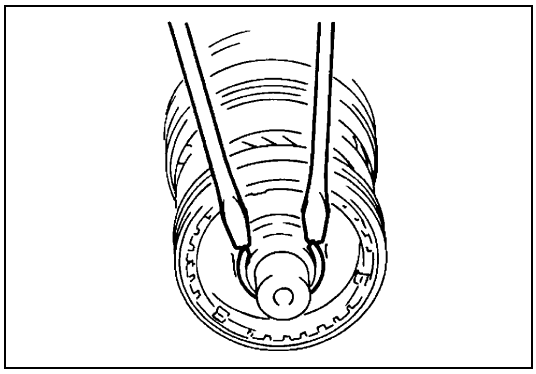

3) Remove circlip retaining hub of high-speed synchronizer sleeve, and slide off sleeve hub, third driven gear and needle bearing from main shaft.

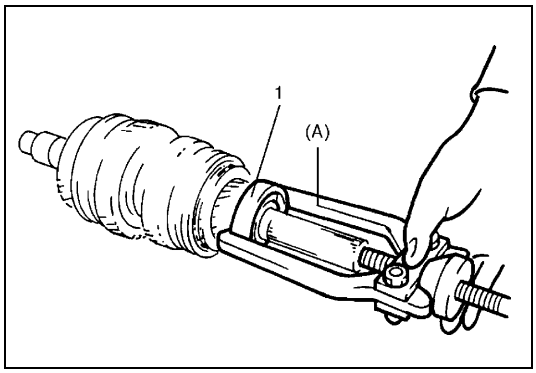

4) Remove circlip retaining rear bearing (1) on main shaft. Remove main shaft bearing using special tool.

Special tool
(A) : 09913-65135

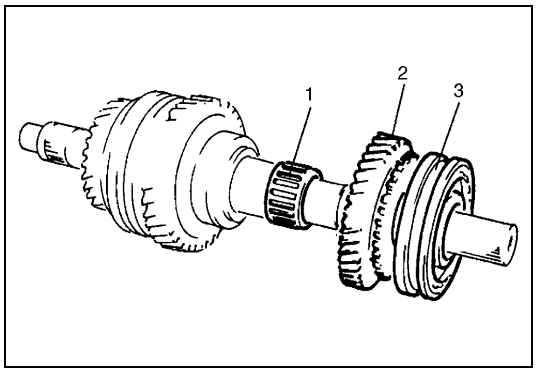

5) From main shaft, take off 5th gear washer, ball, 5th gear, 5th speed synchronizer ring and 5th gear needle bearing (1).
6) Remove circlip retaining the 5th speed synchronizer hub (3) on main shaft.
7) Remove 5th speed synchronizer hub, reverse gear (2) and reverse gear needle bearing.

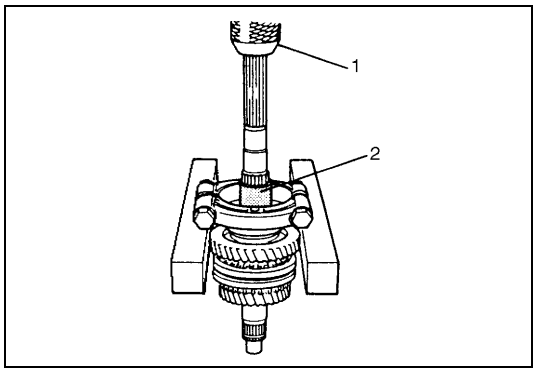

NOTE:

During this removal, watch out for a ball which may fall off. It must not be lost. Also, ball bearing should not be removed together with washer and bush.

8) Remove bearing washer and reverse gear bush (2) on main shaft by using hydraulic press (1).

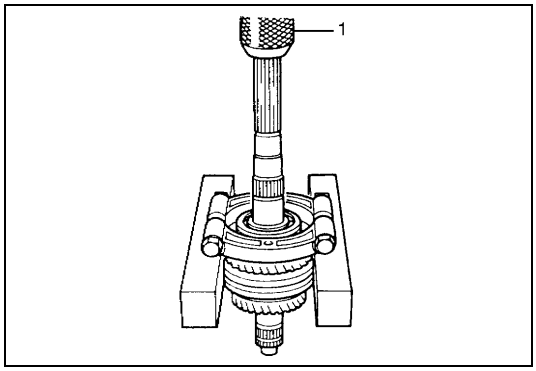

NOTE:

In the state as shown, there is a ball in washer which is located under bearing. Be sure to prevent it from falling off and getting lost.

9) Remove ball and main shaft (center) bearing by using hydraulic press (1).

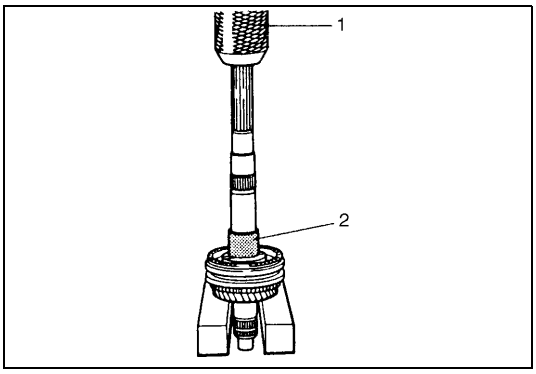

10) Remove bearing washer, ball, low gear, low synchronizer, ring, needle bearing and low gear bush (2) on main shaft.
11) Remove low speed synchronizer sleeve and hub assembly, 2nd gear and 2nd synchronizer ring all together by using hydraulic press (1).

NOTE:

If bush can't be pulled out by hand, pull off sleeve and hub together by using press.

12) Remove sleeve from hub and then take off synchronizer keys and springs.

Shift shafts and forks

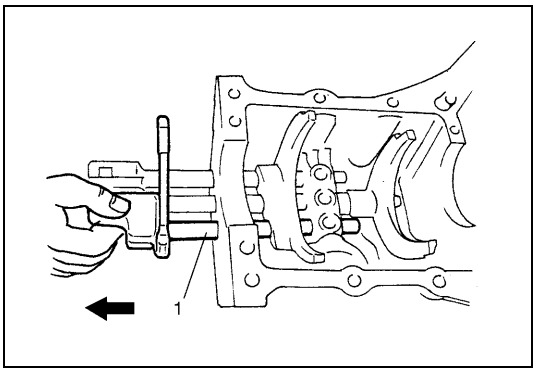

1) Pull out reverse gear shift shaft (1). As this shaft comes out, locating ball and spring will jump out of hole; do not let them fly away.

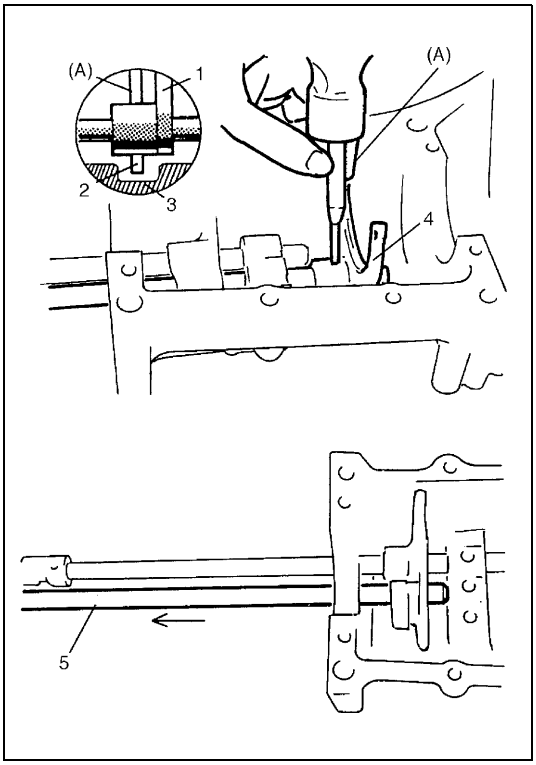

CAUTION:

When removing yoke pin, be sure not to drive it out so far as to contact case. Or it will cause damage to case.

2) Using special tool, drive out yoke pin on high speed gear shift fork (4), and pull out shift shaft (5).
As in above case, be careful not to let locating ball, interlock ball and spring fly away.

Special tool
(A) : 09922-85811

1. Fork	3. Transmission case
2. Spring pin	

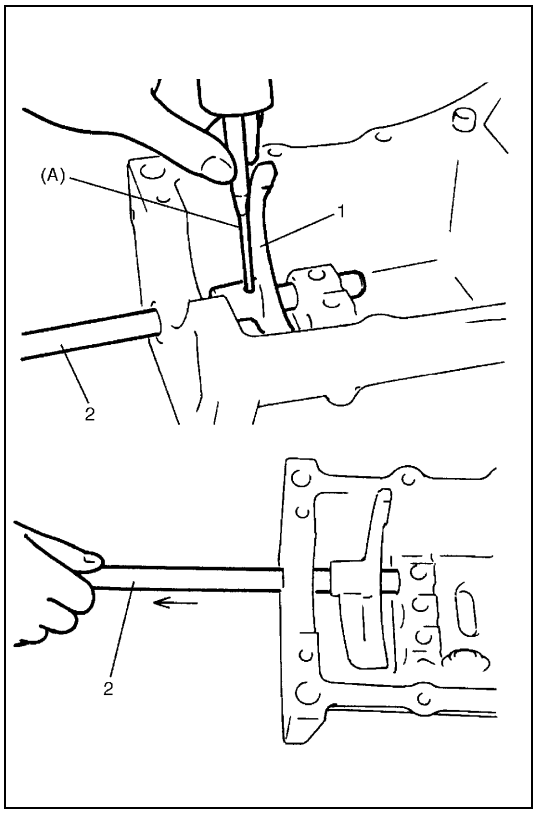

3) Drive yoke pin out of low speed gear shift fork (1) and pull out fork shaft (2) and fork.

Special tool
(A) : 09922-85811

INSPECTION

Gear Shift Lever

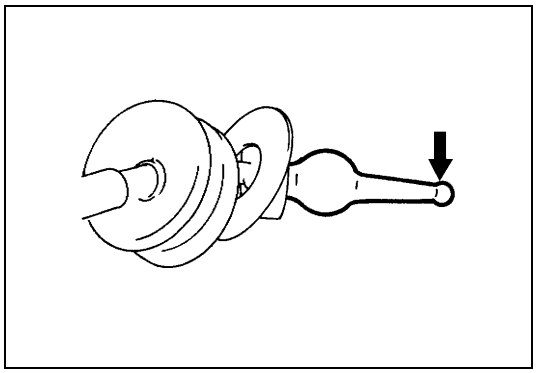

Check lower end of gear shift lever where gear shift fork shaft contact for wear and any kind of damage. Worn or damaged gear shift lever must be replaced with a new one.

Reverse & Low Speed Select Guide Pins

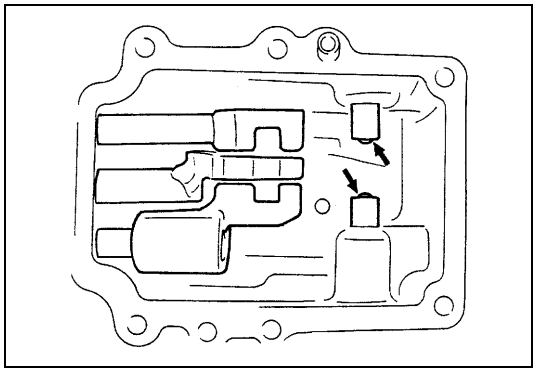

Check both select guide pins where gear shift front arm contacts for stepped wear. Replace worn select guide pin.

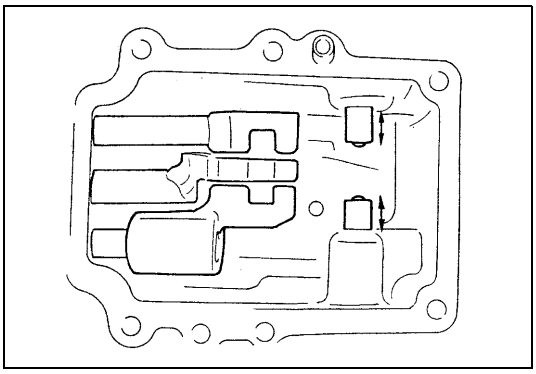

Move shaft and check low speed select guide pin for smooth movement without rattle. If found defective, replace it and apply grease to pin.

Gear Shift Fork Shaft

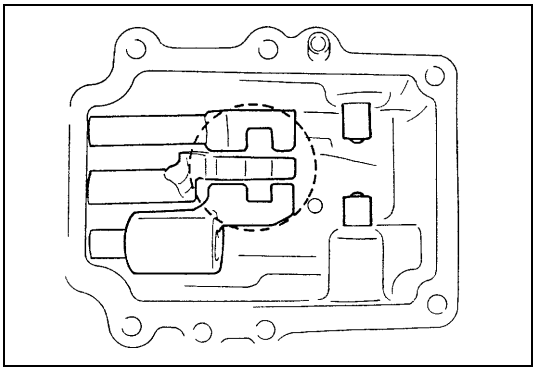

Visually check each gear shift fork shaft (High, Low and Reverse) where gear shift front arm contacts for wear. Worn shaft must be replaced.

Gears

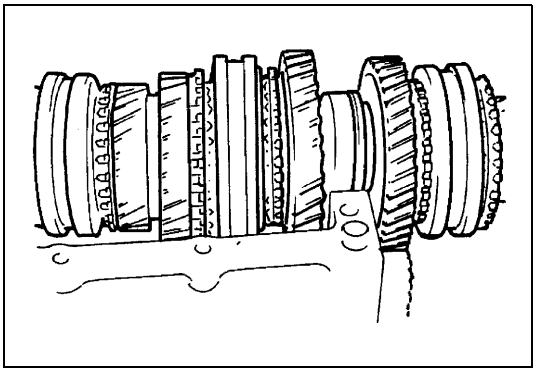

Check each part for wear, damage or discoloration. Replace if found defective.

Synchronizer Hubs, Sleeves and Keys

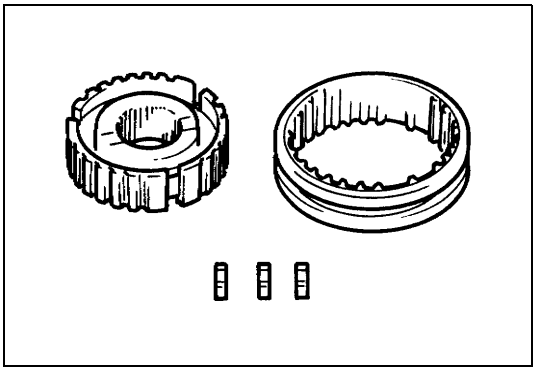

Check each part for wear or damage. Replace if found defective.

Shift Forks and Sleeves

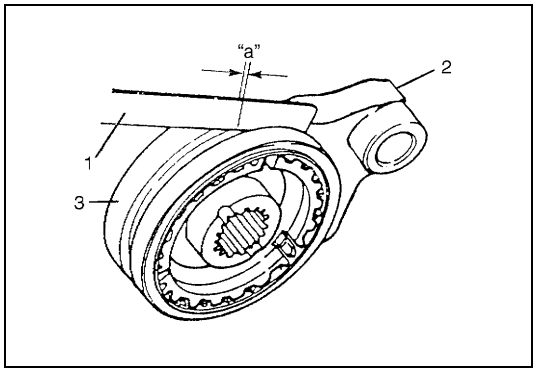

Check contact surfaces for wear or damage.
Measure clearance between fork and sleeve.

Clearance "a" between fork and sleeve
Service limit : 1.0 mm (0.039 in.)

1. Thickness gauge	3. Sleeve
2. Shift fork	

Main Shaft

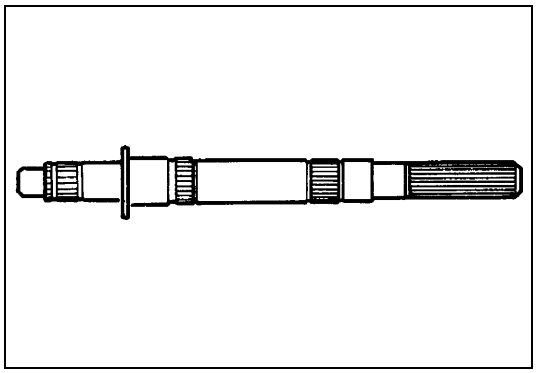

Check each part of shaft for wear, discoloration or damage. Replace shaft if any part is found defective.

Bearings and Bushes

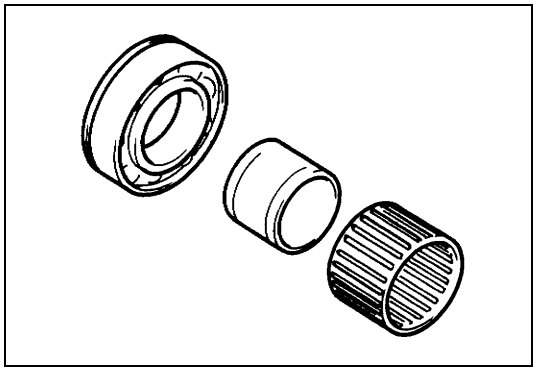

Check each part for wear, damage or discoloration. With ball bearing, check that it rotates smoothly and it does not make noise.
Replace if found defective.

Input Shaft

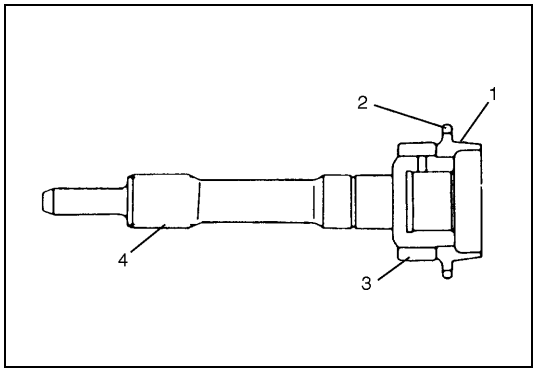

Inspect cone (1) and toothed ring (2) for wear and damage.

Inspect gear teeth (3) and splines (4) for wear and damage.
If any part of input shaft inspected as above is found excessively worn or badly damaged, replace shaft.

Combination of Gear and Synchronizer Ring

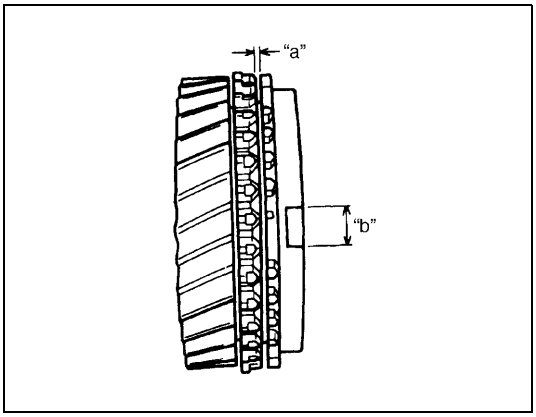

Check clearance "a" between synchronizer ring and gear, key slot width "b" in synchronizer ring and each chamfered tooth of gear and synchronizer ring and replace with new one, if necessary. Also, check gear tooth.

Clearance "a" between synchronizer ring and gear
Standard : 1.0 – 1.4 mm (0.039 – 0.055 in.)
Service limit : 0.5 mm (0.019 in.)

Key slot width "b"
Standard : 10.1 mm (0.397 in.)
Service limit : 10.4 mm (0.409 in.)

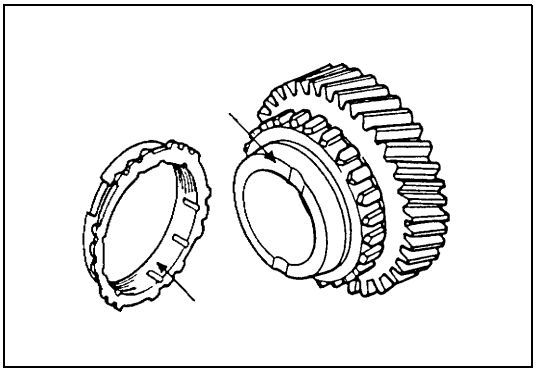

Inspect external cone (of gear) and internal cone (of ring) for abnormal wear. Be sure that contact patterns on these surfaces indicate uniform full-face contact, and that surfaces are free from any wavy wear. A badly worn member must be replaced.
Proper synchronizing action on gear shifting can be expected only when ring-to-gear clearance and condition of cone surfaces, among other things, are satisfactory.

Fork Shaft Locating Springs

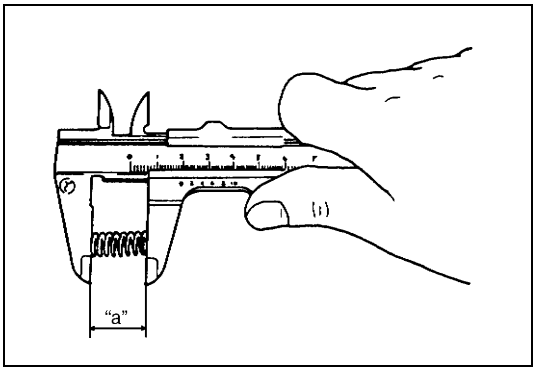

If "gears slipping out of mesh" has been complained, check these springs for strength by measuring their free length, and replace them if their free lengths are less than service limit.

Fork shaft spring free length "a"
Standard : 25.0 mm (0.984 in.)
Service limit : 23.0 mm (0.906 in.)

Gear Shift Shafts

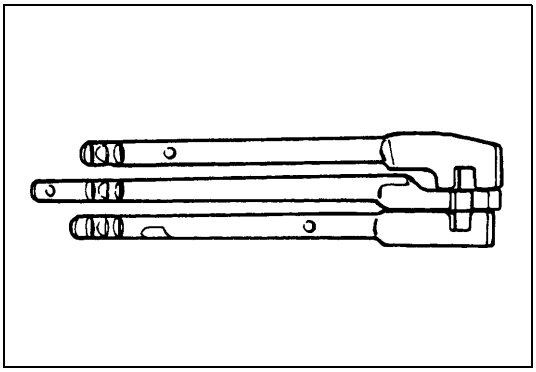

Check the part of shaft as indicated in figure for uneven wear. Replace shaft if uneven wear is noted.

Assembling Unit

NOTE:

- **Before installation, wash each part and apply specified gear oil to sliding faces of bearing and gear.**
- **Use new circlips on shaft for reinstallation. Don't reuse used circlips.**
- **Tighten each fastening bolt and nut according to "Tightening Torque Specification" in this section.**

Main shaft and input shaft

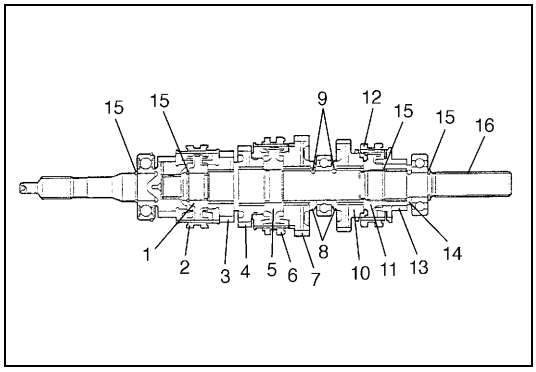

Install each parts by reversing respective removal procedures. Be careful for installing direction of each washer, gear, synchronizer hub and sleeve.
Refer to figure. Make sure to install each ball on main shaft.

1. High speed synchronizer hub	9. Ball
2. High speed synchronizer sleeve	10. Reverse gear
3. 3rd gear	11. 5th speed synchronizer hub
4. 2nd gear	12. 5th speed synchronizer sleeve
5. Low speed synchronizer hub	13. 5th gear
6. Low speed synchronizer sleeve	14. 5th gear washer
7. Low gear	15. Circlip
8. Washer	16. Main shaft

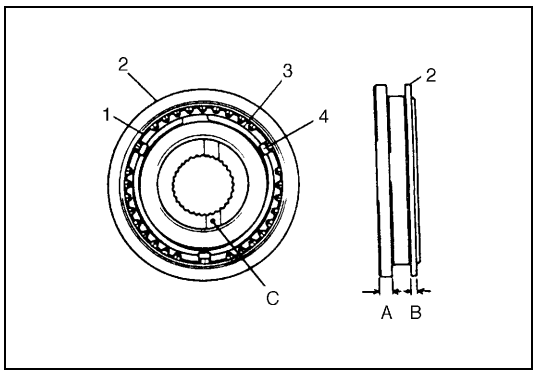

1) Fit sleeve (2) to low speed hub (1), place 3 synchronizer keys (4) in it and set synchronizer springs (3).
   Refer to figure for proper installing direction of hub, sleeve and springs. Synchronizer key has no specific direction for installation.

NOTE:

When installing each synchronizer spring, insert its hooked end to hub hole and put it toward right.

A :	Thick (2nd gear side)
B :	Thin (Low gear side)
C :	Punch mark (Low gear side)

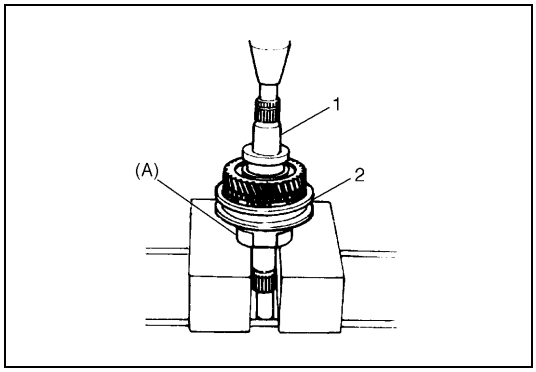

2) Install needle bearing, 2nd gear and 2nd synchronizer ring to main shaft (1).
3) Press-fit hub and sleeve assembly onto main shaft with press.

Special tool
(A) : 09927-08210

2. Low speed sleeve and hub assembly

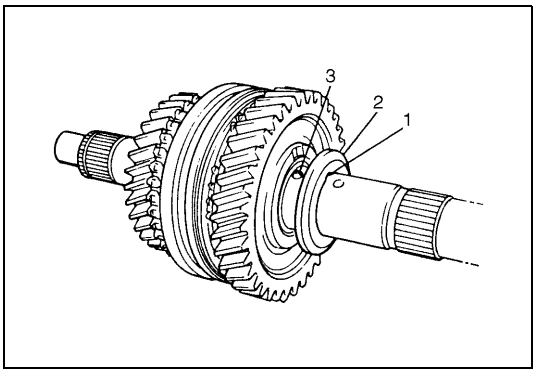

4) Install low gear bush, needle bearing, synchronizer ring, low gear, ball (3) and washer onto main shaft.
   Fit ball into hole in shaft and install washer so that its slot (1) comes over ball.
   To direct washer correctly, bring its circumference chamfered side (2) to main shaft center bearing.

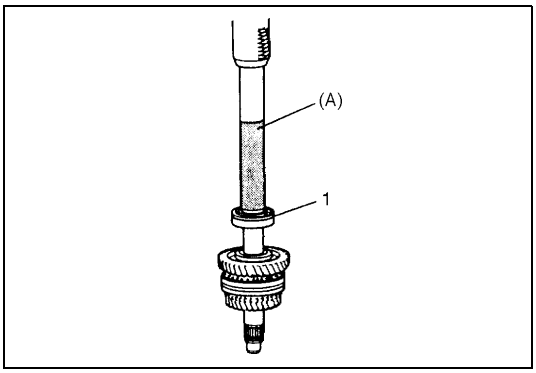

5) Press-fit center bearing with bearing installer (special tool) using care for its installing direction.

Special tool
(A) : 09925-18011

1.	Ring groove

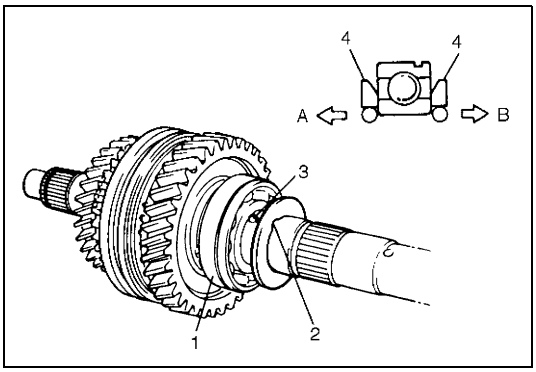

6) Install ball (3) and washer (4).
   As figure shows, install washer so that its circumference chamfered side faces center bearing (1) and its slot (2) comes over ball.

A :	Input shaft side
B :	Rear bearing side

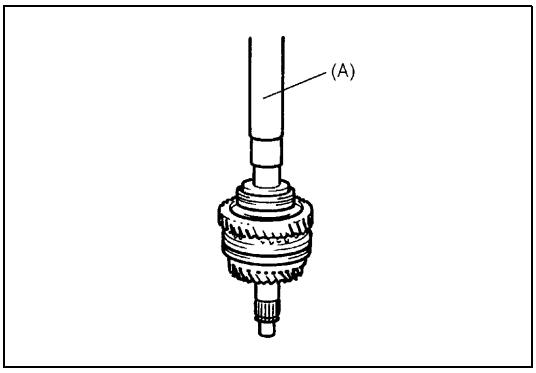

7) Press-fit reverse gear bush, preventing ball installed in step 6) from coming off.

Special tool
(A) : 09925-18011

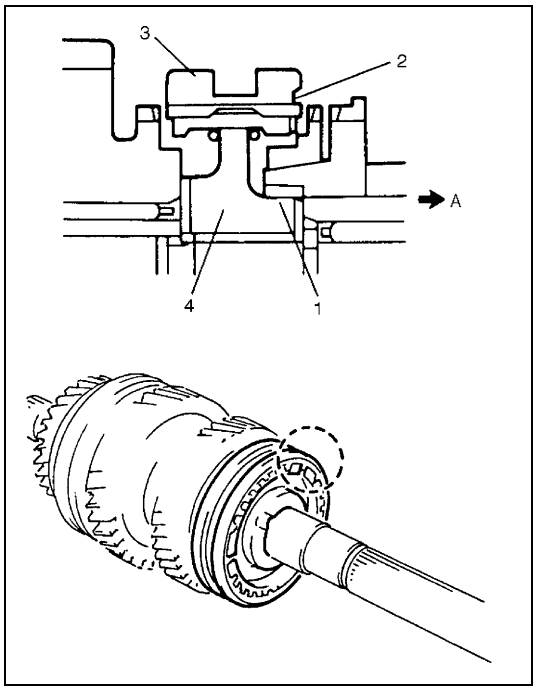

8) Install reverse gear bearing, reverse gear and 5th speed synchronizer hub (4) and sleeve (3). For proper direction, make sure to install hub so that the side whose inside boss (1) is smaller in diameter and longer is directed to main shaft rear bearing, and sleeve so that the side whose inside is stepped is also directed to main shaft rear bearing.

2.	Stepped sleeve
A :	Rear bearing side

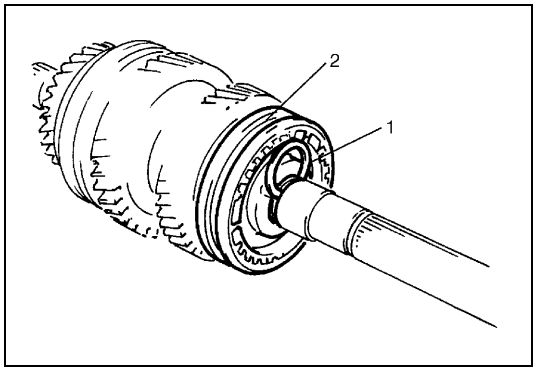

9) Fit 5th speed synchronizer hub circlip (1) into groove in main shaft.

2.	5th speed synchronizer hub and sleeve assembly

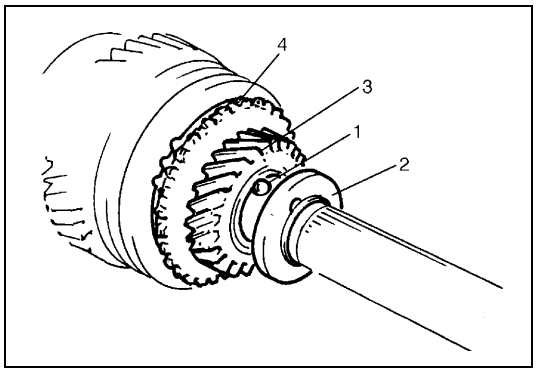

10) Install 5th gear bearing, 5th gear synchronizer ring (4) and 5th gear (3). Then install ball (1) and washer (2), making oil groove of washer face 5th gear.

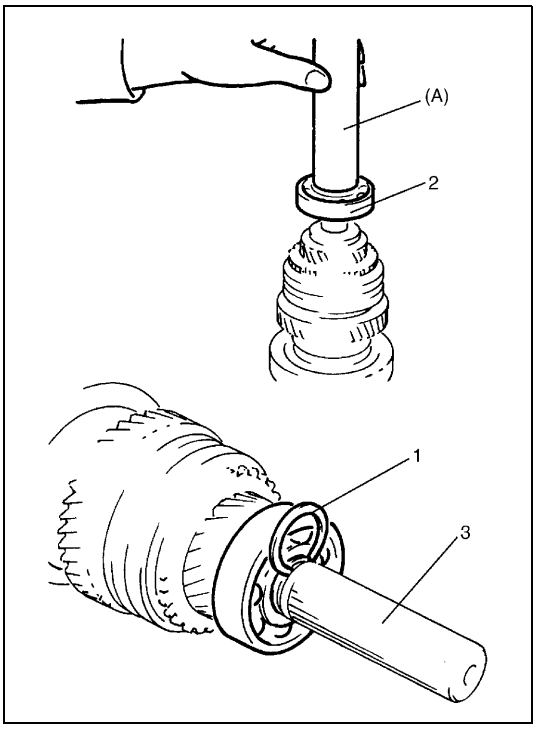

11) Press-fit main shaft rear bearing (2) and fit circlip (1) into groove in main shaft (3).

Special tool
(A) : 09925-18011

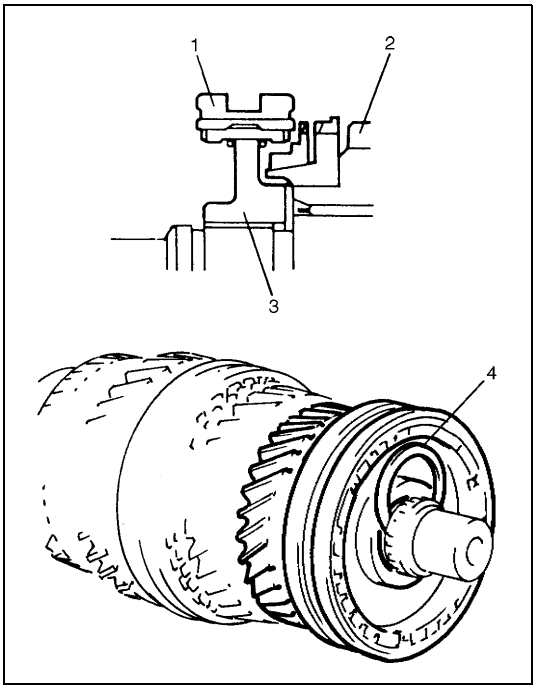

12) Install 3rd gear bearing, 3rd gear (2), high speed synchronizer ring, hub (3) and sleeve (1). When installing hub, direct the side with larger outer diameter boss to 3rd gear side. Then fit circlip (4) into groove in main shaft.

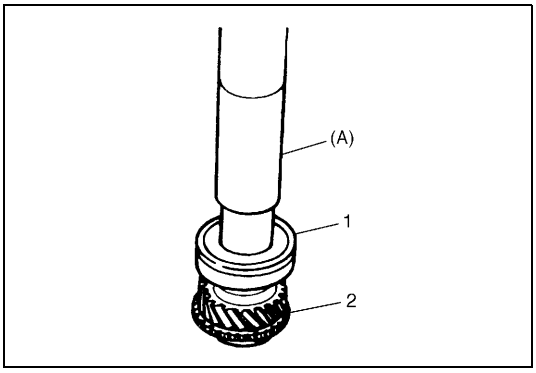

13) When installing bearing (1), bring it so that its groove for C-ring is in the rear and press-fit with special tool and hydraulic press.

Special tool
(A) : 09925-18011

2. Input shaft

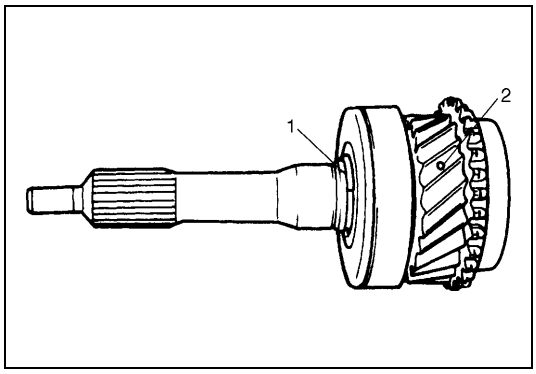

14) After fitting circlip (1), air-blow lubrication oil hole (2).

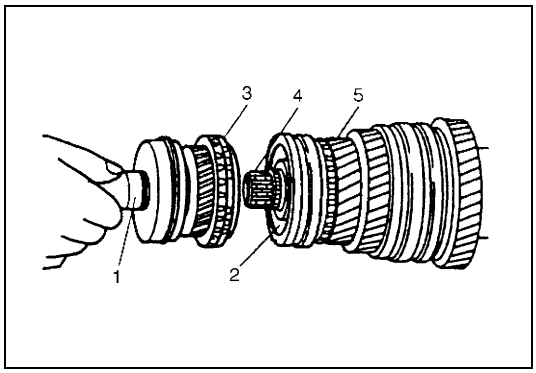

15) Install synchronizer ring (3), needle bearing and input shaft (1).

2. Main shaft
4. Bearing
5. 3rd gear

Countershaft and reverse idle gear

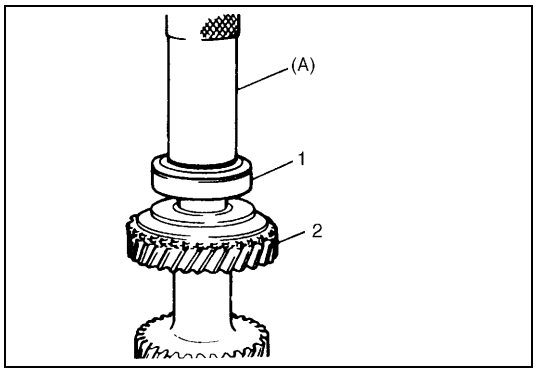

1) Press-fit front bearing (1) and fit circlip.

Special tool
(A) : 09913-84510

2. Countershaft

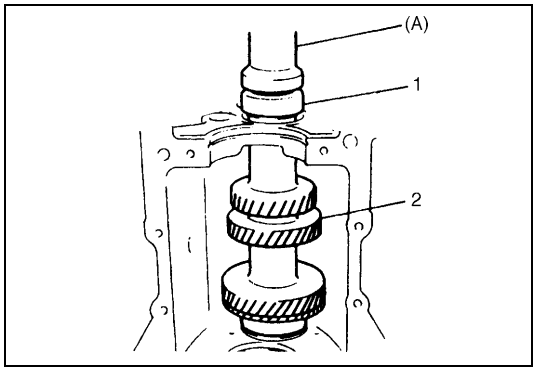

2) With shaft inserted into case, install center bearing (1) on it and then press-fit shaft by using special tool and hammer. Meanwhile case should be supported on wood blocks.

Special tool
(A) : 09925-18011

2. Countershaft

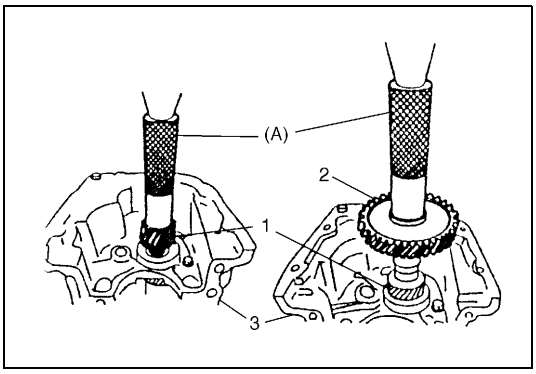

3) Press-fit reverse gear (1) and then 5th gear (2).

NOTE:

When press-fitting, hold countershaft with its front end set on wood blocks.

Special tool
(A) : 09913-80113

3. Lower case

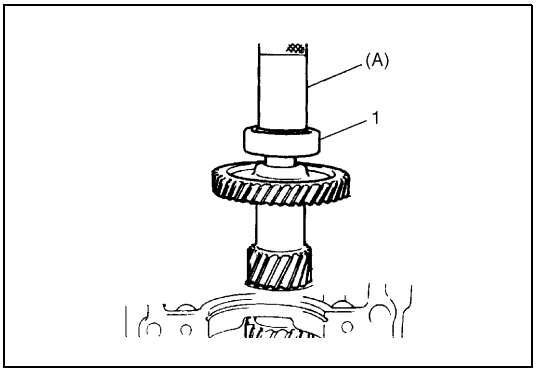

4) After press-fitting countershaft rear bearing (1), make sure to fit circlip securely.

NOTE:

When press-fitting, hold countershaft with its front end set on wood blocks.

Special tool
(A) : 09913-80113

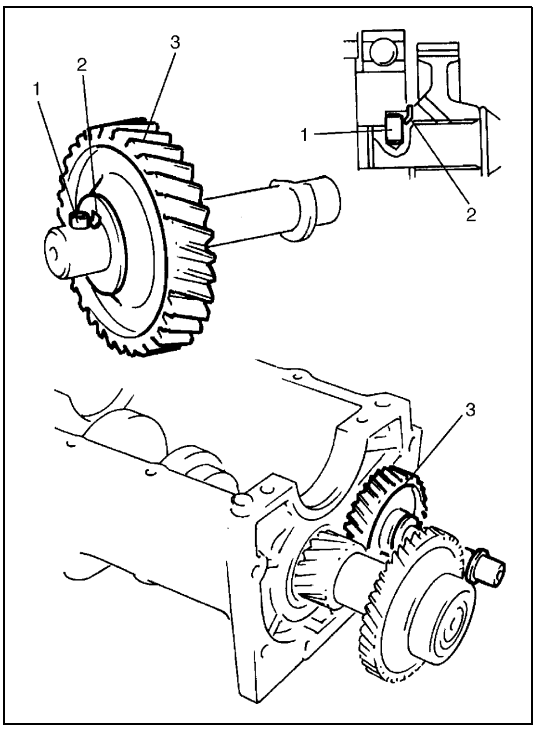

5) Install reverse idle gear (3) and washer onto reverse gear shaft and pin (1) into it.
Install above as assembled into lower case with pin and washer tongue (2) aligned as shown.

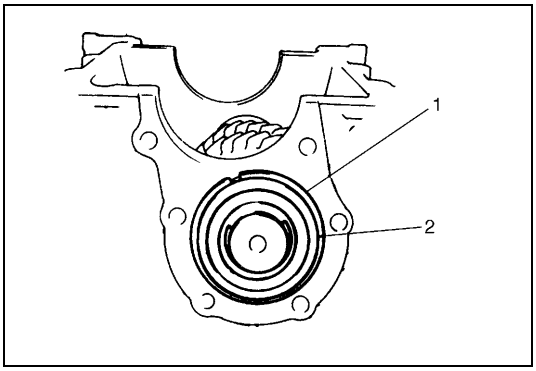

6) Fit circlip (1) around bearing and check that circlip just contacts with case surface.

2. Front bearing

Shift shafts and forks

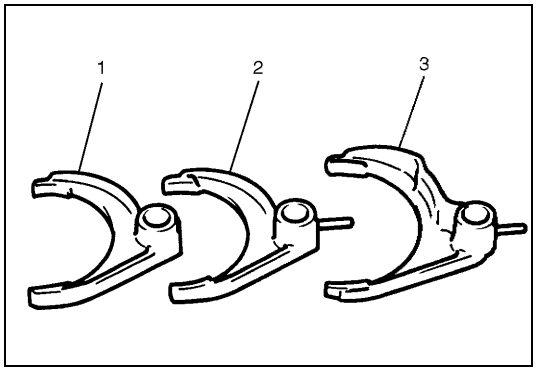

1.	High speed gear shift fork
2.	Reverse gear shift fork
3.	Low speed gear shift fork

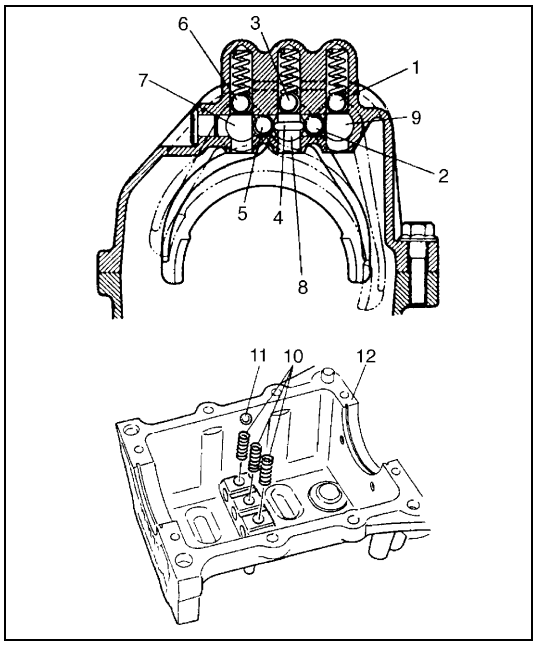

Note that 3 shift shafts individually have a locating ball and locating spring, and that 2 interlock balls and an interlock roller are used between shafts as shown.

Install low, high and reverse shafts in that order.

1) Install 3 locating springs into 3 holes in upper case. Fit locating ball on top of locating spring in hole.

1.	Locating ball	7.	Reverse gear shift shaft
2.	Interlock ball	8.	High speed gear shift shaft
3.	Locating ball	9.	Low speed gear shift shaft
4.	Interlock roller	10.	Locating spring
5.	Interlock ball	11.	Locating ball
6.	Locating ball	12.	Upper case

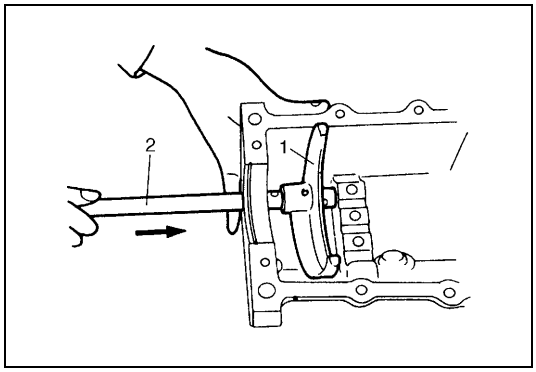

2) Insert low speed gear shift shaft (2) into upper case and low speed shift fork (1) in the direction as shown.

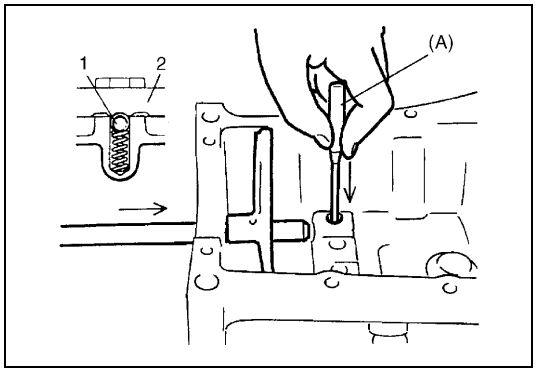

3) Push down low speed gear shift shaft locating ball (1) to pass shaft over it and keep inserting shaft until locating ball fits in center slot of 3 continuous slots in shaft.
   Drive shift yoke pin into fork and shaft.

Special tool
(A) : 09922-85811

2.	Shift shaft

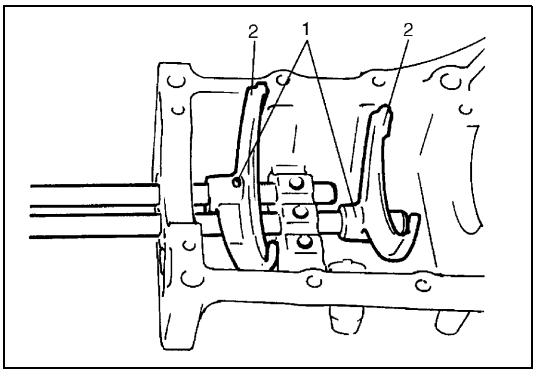

4) Install interlock ball and locating ball in upper case.
After installing interlock roller in high speed gear shift shaft and insert shaft into upper case as described in 2) and 3).
Fork (2) should installed in such direction as shown. Then drive shift yoke pin (1) until it becomes flush with outer surface of fork.

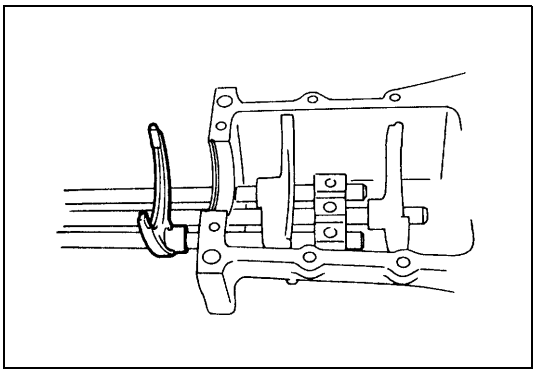

5) Install interlock ball and locating ball into upper case. Then insert reverse gear shift shaft into upper case as described in 2) and 3).

Transmission lower case and upper case

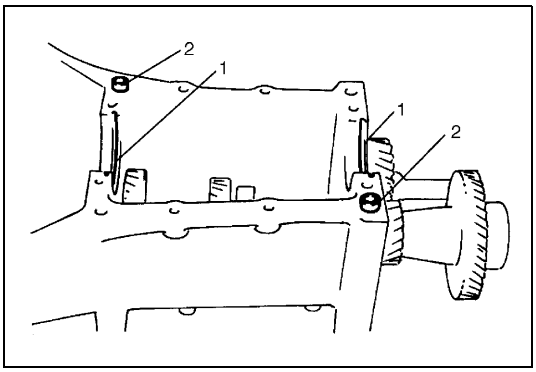

1) With countershaft assembly, reverse idle gear and reverse gear shaft installed in lower case, check that bearing stopper rings (1) are fitted in both sides of lower case as shown.
Also check for 2 knock pins (2).

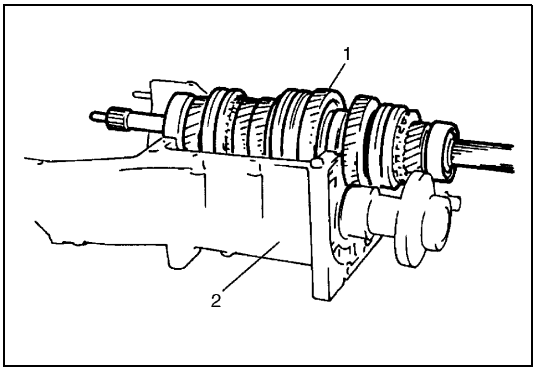

2) Make sure that mating surfaces of both lower and upper cases are clean.
3) Install main shaft and input shaft assembly (1) in lower case (2).

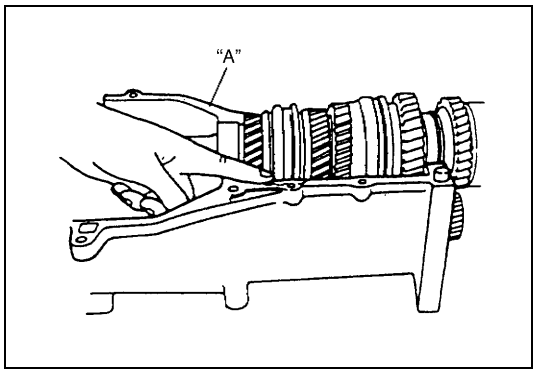

4) Uniformly apply sealant to mating surface of lower case.

"A" : Sealant 99000-31110

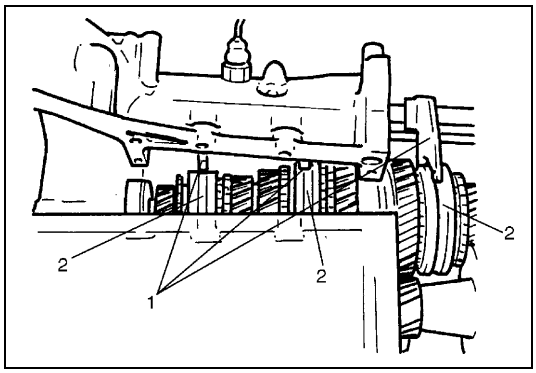

5) Install upper case to lower case by matching 3 shift forks (1) with 3 grooves in synchronizer sleeve (2) on main shaft respectively.
6) Tighten case bolts to specification.

Tightening torque
Transmission case bolts :
23 N·m (2.3 kg-m, 17.0 lb-ft)

Extension case

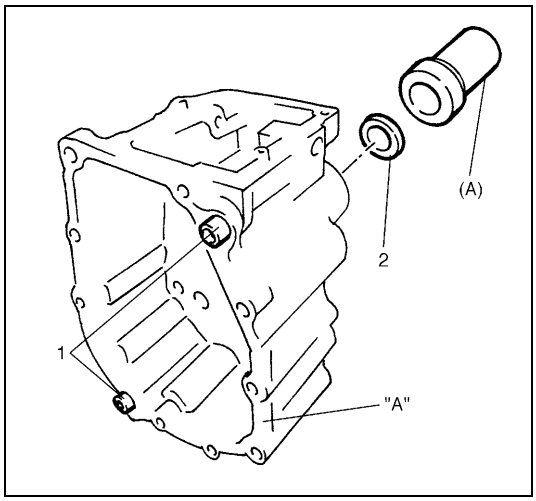

1) Check knock pins (1) are fitted.
2) Install extension case seal (2) so that end surface of oil seal becomes flush with that case. Apply grease to extension case seal lip.

Grease 99000-25010

Special tool
(A) : 09913-85210

3) Clean surface of extension case to mate with transmission case and uniformly apply sealant.

"A" : Sealant 99000-31110

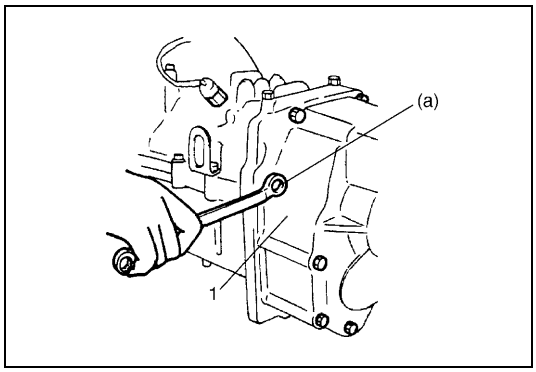

4) Make sure that 3 shift shafts are in neutral position.
5) Install extension case (1) to transmission case.
6) Tighten case bolts to specification.

Tightening torque
Extension case bolts
(a) : 23 N·m (2.3 kg-m, 17.0 lb-ft)

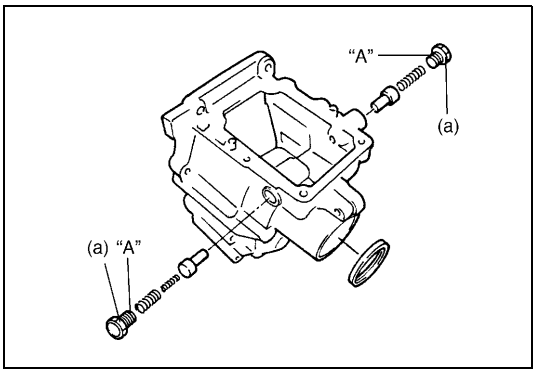

7) Install select guide pins, low select return spring and reverse select return springs (outer and inner).
8) Apply thread lock to thread of select return spring bolt.
   And tighten select return spring bolt to extension case to specified torque.

Tightening torque
Select return spring bolts
(a) : 23 N·m (2.3 kg-m, 17.0 lb-ft)

"A" : Cement 99000-32110

Input shaft bearing retainer

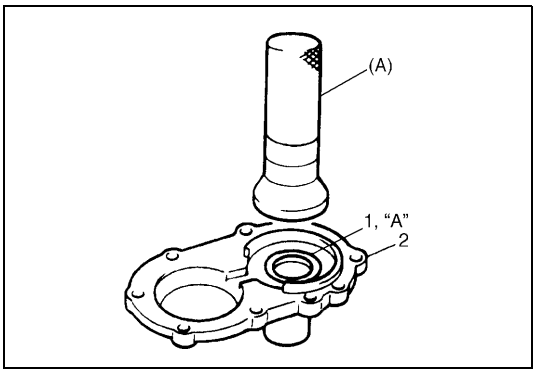

1) Install new oil seal (1) with special tool and hammer up to case surface, apply grease to oil seal lip.

Special tool
(A) : 09951-16080

"A" : Grease 99000-25010

2) Clean surface of retainer (2) to mate with transmission case and uniformly apply sealant.

Sealant 99000-31110

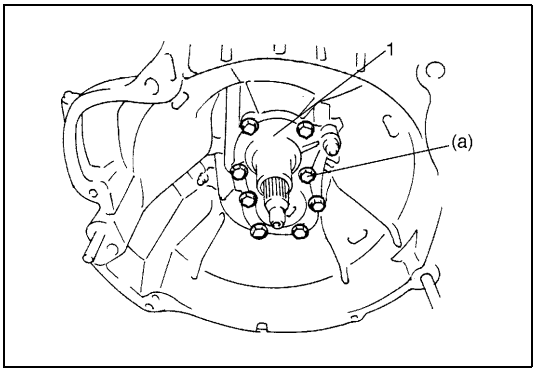

3) Tighten retainer bolts to specification.

Tightening torque
Input shaft bearing retainer bolts
(a) : 23 N·m (2.3 kg-m, 17.0 lb-ft)

4) Check transmission input shaft for easy rotation by hand.
5) Check each select and shift shaft for operation.

1. Input shaft bearing retainer

Clutch release bearing

Before installing bearing, apply grease to inner surface of clutch release bearing. For detail, refer to "Clutch Cover, Clutch Disc, Flywheel and Release Bearing" in Section 7C.

Input shaft

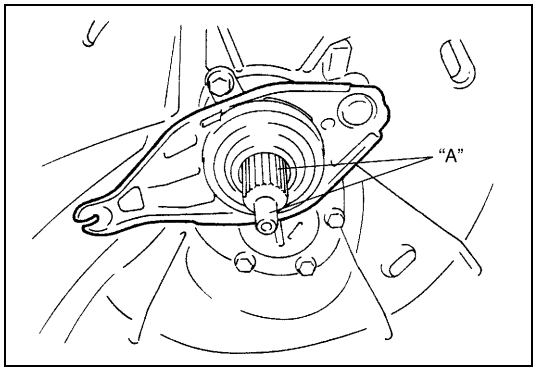

Before remounting transmission assembly to engine and vehicle, apply grease to input shaft.

"A" : Grease 99000-25210

Front gear shift control

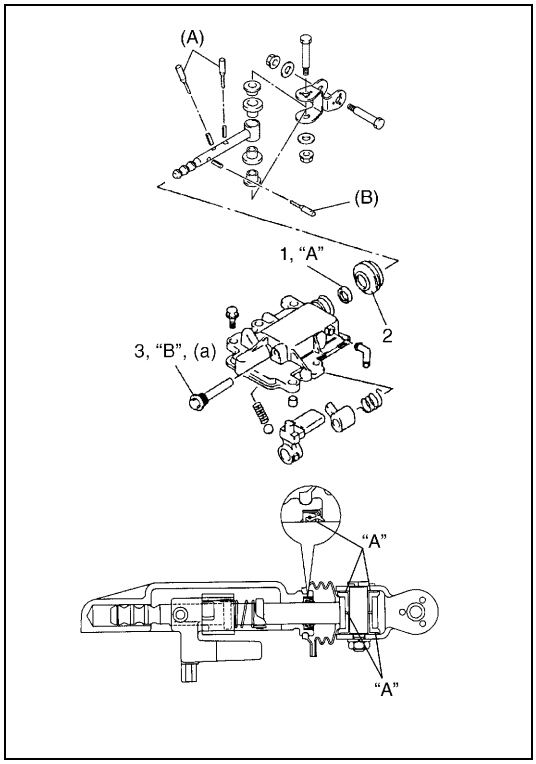

1) Clean all parts thoroughly, inspect them and replace with new ones as required.
2) Assemble component parts by reversing removal procedure.

Special tool
(A) : 09922-85811
(B) : 09925-78210

- Apply grease to lip portion of oil seal. Refer to the figure for installing direction.

"A" : Grease 99000-25010

- Install boot in such direction that breather faces downward.
- Apply thread lock cement to reverse gear shift limit bolt and tighten it to specified torque.

"B" : Cement 99000-32110

Tightening torque
Reverse gear shift limit bolt
(a) : 23 N·m (2.3 kg-m, 17.0 lb-ft)

1.	Oil seal
2.	Boot
3.	Reverse gear shift limit bolt

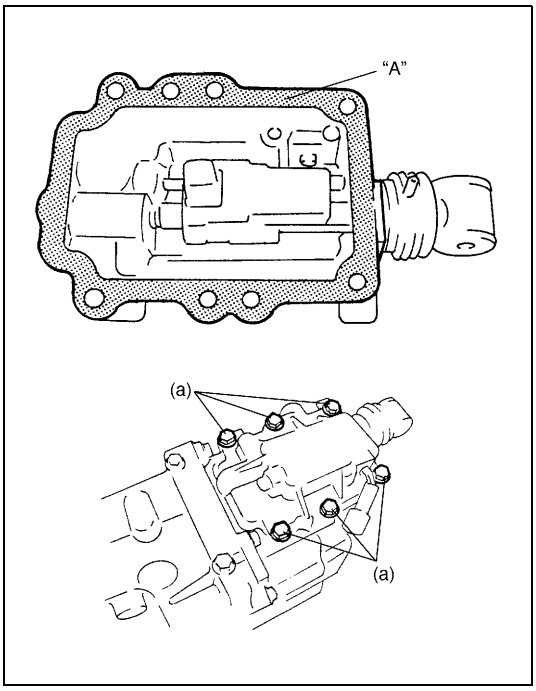

3) When installing gear shift lever front case to extension case, clean joint faces, and then apply sealant to joint faces.

"A" : Sealant 99000-31110

Tightening torque
Gear shift lever front case bolts
(a) : 23 N·m (2.3 kg-m, 17.0 lb-ft)

Tightening Torque Specification

Be sure to torque each bolt and nut according to specification given below, whenever loosened.
If specified torque for particular bolt or nut is not included in the list, refer to Section 0A.

Fastening part	Tightening torque		
	N•m	kg-m	lb-ft
Gear shift control boot cover bolts	23	2.3	17.0
Gear shift lever plate bolts	5.5	0.55	4.0
Extension rod joint bolt	35	3.5	25.5
Control shaft joint nuts	18	1.8	13.0
Select return spring bolts	23	2.3	17.0
Gear shift lever front case bolts	23	2.3	17.0
Transmission case bolts	23	2.3	17.0
Extension case bolts	23	2.3	17.0
Transmission oil filler and drain plugs	23	2.3	17.0
Input shaft bearing retainer bolts	23	2.3	17.0
Reverse gear shift limit bolt	23	2.3	17.0
Transmission to engine bolts and nuts	94	9.4	68.0
Transmission rear mounting bolts	25	2.5	18.0
Gear shift rear arm bolt	34	3.4	24.5

Required Service Material

Material	Recommended SUZUKI product (Part Number)	Use
Lithium grease	SUZUKI SUPER GREASE A (99000-25010)	• Oil seal lips • Gear shift control lever • Gear shift control shaft bushes
	SUZUKI SUPER GREASE I (99000-25210)	• Input shaft spline front end
Sealant	SUZUKI BOND NO.1215 (99000-31110)	• Oil drain and filler plug • Mating surface of transmission case • Mating surface of extension case • Mating surface of input shaft bearing retainer • Mating surface of gear shift lever case
Thread lock cement	THREAD LOCK CEMENT 1322 (99000-32110)	• Reverse gear shift limit bolt • Gear shift rear arm bolt

Special Tool

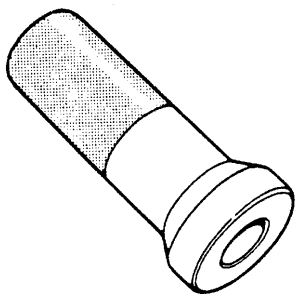 09951-16080 Bearing installer	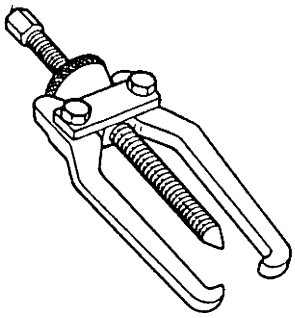 09913-65135 Bearing puller	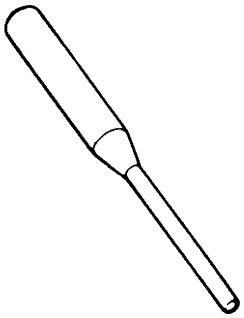 09922-85811 Spring pin remover	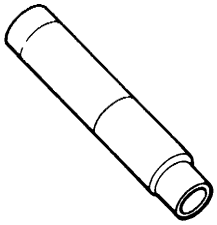 09925-18011 Bearing installer
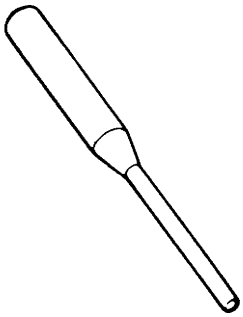 09925-78210 Spring pin remover	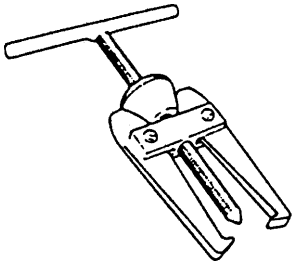 09913-60910 Bearing puller	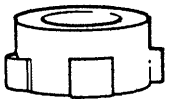 09927-08210 Shaft remover	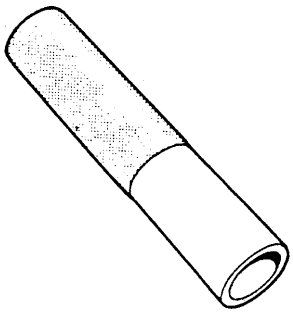 09913-80113 Bearing installer
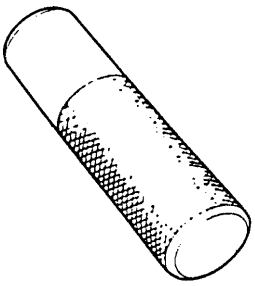 09913-84510 Bearing installer			

SECTION 7B

AUTOMATIC TRANSMISSION (4 A/T)

WARNING:

For vehicles equipped with Supplemental Restraint (Air Bag) System :

- **Service on and around the air bag system components or wiring must be performed only by an authorized SUZUKI dealer. Refer to "Air Bag System Components and Wiring Location View" under "General Description" in air bag system section in order to confirm whether you are performing service on or near the air bag system components or wiring. Please observe all WARNINGS and "Service Precautions" under "On-Vehicle Service" in air bag system section before performing service on or around the air bag system components or wiring. Failure to follow WARNINGS could result in unintentional activation of the system or could render the system inoperative. Either of these two conditions may result in severe injury.**
- **Technical service work must be started at least 90 seconds after the ignition switch is turned to the "LOCK" position and the negative cable is disconnected from the battery. Otherwise, the system may be activated by reserve energy in the Sensing and Diagnostic Module (SDM).**

CONTENTS

General Description 7B-3
- Electronic Shift Control System 7B-6
- Transmission Control Module (TCM) 7B-7
  - Throttle position sensor 7B-8
  - Output shaft speed sensor 7B-8
  - Input shaft speed sensor 7B-8
  - Transmission range sensor (Shift switch) 7B-8
  - O/D off switch 7B-9
  - Fail safe function 7B-10
  - Automatic gear shift diagram 7B-12

Diagnosis 7B-13
- Automatic Transmission Diagnostic Flow Table 7B-13
- Trouble Diagnosis Table 7B-18
- Stall Test 7B-20
- Time Lag Test 7B-21
- Line Pressure Test 7B-22
- Engine Brake Test 7B-23
- "P" Range Test 7B-23
- Electronic Control System Diagnosis 7B-24
  - Precautions in diagnosing troubles 7B-24
- Diagnostic Trouble Code(s) Check 7B-25
- Diagnostic Trouble Code(s) Clearance 7B-27
- Diagnostic Trouble Code (DTC) Table 7B-28
- TCM Power and Ground Circuit Check 7B-30
- DTC P0715/DTC No.14 Input / Turbine Speed Sensor Circuit 7B-31
- DTC P0730/DTC No. 18 Incorrect Gear Ratio 7B-33
- DTC P0753/DTC No.21/22 Shift Solenoid-A (No.1) Electrical 7B-35
- DTC P0758/DTC No.23/24 Shift Solenoid-B (No.2) Electrical 7B-35
- DTC P0763/DTC No.43/44 Shift Solenoid-C (No.3) Electrical 7B-35
- DTC P0768/DTC No.45/46 Shift Solenoid-D (No.4) Electrical 7B-35
- DTC P0743/DTC No.25/26 TCC (Lock-Up Clutch) Circuit Electrical 7B-35
- DTC P0741/DTC No.29 TCC (Lock-Up) Circuit Performance or Stuck OFF 7B-37
- DTC P0720/DTC No. 31 Output Shaft Speed Sensor Circuit 7B-38
- DTC P1700/DTC No.32/33 Throttle Position Signal Input Malfunction 7B-41
- DTC P0705/DTC No.34 Transmission Range Sensor (Switch) Circuit Malfunction 7B-43
- DTC P0725/DTC No.35 Engine Speed Input Circuit 7B-45
- DTC P0710/DTC No.36/38 Transmission Fluid Temperature Sensor Circuit 7B-47
- DTC P1709/DTC No.51 Engine Coolant Temperature Signal Circuit 7B-49
- DTC P0702/P1702/DTC No.52 Transmission Control System Electrical or Internal Malfunction of TCM 7B-50
- DTC P1887/DTC No.57 Vehicle Speed Sensor (VSS) Signal Circuit 7B-51
- Scan Tool Data 7B-52
- Inspection of TCM and Its Circuits 7B-56

On-Vehicle Service 7B-58
- Maintenance Service 7B-58

Fluid level check..... 7B-58
Fluid change..... 7B-59
Oil cooler hoses 7B-60
Selector Lever..... 7B-61
Transmission Range Sensor
(Shift Switch)..... 7B-62
Selector Rod 7B-64
Output Shaft Speed Sensor..... 7B-65
Input Shaft Speed Sensor..... 7B-66
Vehicle Speed Sensor 7B-67
Throttle Position Sensor..... 7B-67
Engine Coolant Temperature (ECT)
Sensor..... 7B-67
O/D Off Switch 7B-68
Shift Solenoid Valves and Transmission
Fluid Temperature Sensor 7B-68
Shift solenoid valves and lock-up
solenoid valve 7B-69
Transmission fluid temperature sensor... 7B-70
Extension Case Oil Seal 7B-71
Transmission Control Module (TCM)..... 7B-71
Learning Control Memory Initialization 7B-72
Interlock Cable (if equipped)..... 7B-72
Unit Repair Overhaul..... 7B-75
Unit Dismounting 7B-76
Unit Remounting..... 7B-77
Unit Disassembly..... 7B-77
Disassembly of Subassembly..... 7B-86
Oil pump 7B-86
Front clutch (C1 clutch)..... 7B-89
Rear clutch (C2 clutch) 7B-94
Planetary set..... 7B-99
Valve body 7B-101
Output shaft assembly 7B-107
Unit Assembly..... 7B-108
Tightening Torque Specification..... 7B-120
Special Tool 7B-121
Required Service Material..... 7B-122

General Description

This automatic transmission is a full automatic type with 3-speed plus overdrive (O/D).
The torque converter is a 3-element, 1-step and 2-phase type. The gear shift device consists of 2 sets of planetary gear units, 2 sets of disc type clutches and 3 sets of disc type brakes. The gear shift is done by selecting one of 6 positions (“P”, “R”, “N”, “D”, “2” and “L”) by means of the select lever installed on the floor. On the shift knob, there is an overdrive (O/D) cut switch which allows shift-up to the overdrive mode and shift-down from the overdrive mode.

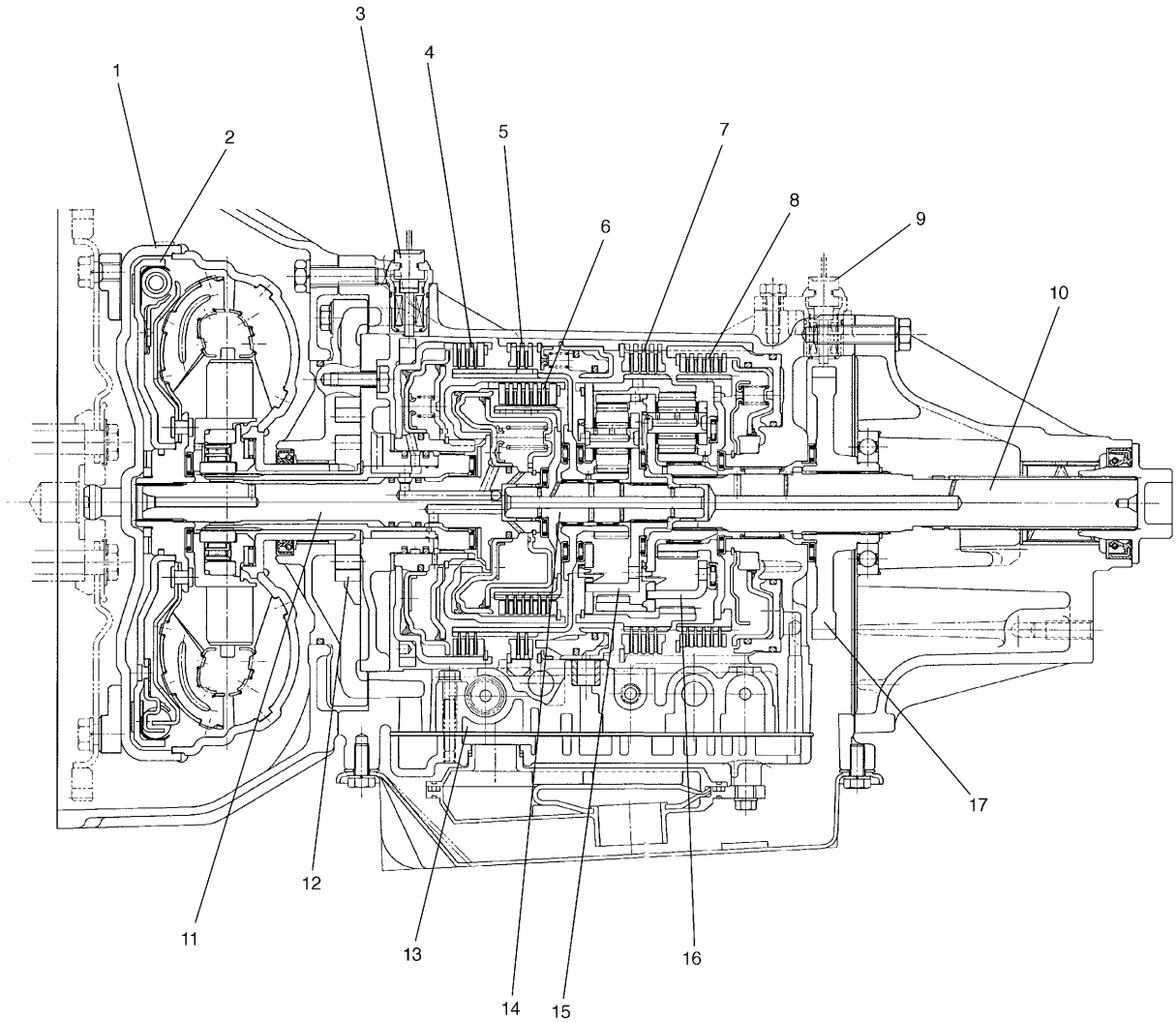

1. Torque converter	7. Reverse brake	13. Valve body
2. Torque converter clutch (Lock-up clutch)	8. 1st and 2nd brake	14. Intermediate shaft
3. Input shaft speed sensor (Turbine rev. sensor)	9. Output shaft speed sensor (A/T vehicle speed sensor)	15. Front carrier
4. Front clutch (C1)	10. Output shaft	16. Rear carrier
5. Overdrive brake	11. Input shaft	17. Parking gear
6. Rear clutch (C2)	12. Oil pump	

Item			Specifications		
Torque converter	Type Stall torque ratio		3-element, 1-step, 2-phase type More than 1.7		
Oil pump	Type Drive system		Internal gear type oil pump Engine driven		
Gear change device	Type		Forward 4-step, reverse 1-step planetary gear type		
	Shift position		“P” range “R” range “N” range “D” range (O/D ON) “D” range (O/D OFF) “2” range “L” range	Gear in neutral, output shaft fixed, engine start Reverse Gear in neutral, engine start Forward 1st ↔ 2nd ↔ 3rd ↔ 4th (O/D) automatic gear change Forward 1st ↔ 2nd ↔ 3rd ← 4th automatic gear change Forward 1st ↔ 2nd ← 3rd automatic gear change Forward 1st ← 2nd reduction, and fixed at 1st gear	
	Gear ratio	1st	2.962	Number of teeth	Front sun gear : 21 Rear sun gear : 34 Front pinion gear : 19 Rear pinion gear : 16 Front internal gear : 59 Rear internal gear : 66
		2nd	1.515		
		3rd	1.000		
		4th (overdrive gear)	0.737		
		Reverse (reverse gear)	2.809		
	Control elements		Wet type multi-disc clutch ... 2 sets Wet type multi-disc brake ... 3 sets		
	Final gear reduction ratio (Differential)		3.909		
Lubrication	Lubrication system		Force feed system by oil pump		
Cooling	Cooling system		Radiator assisted cooling (water-cooled)		
Fluid used			Equivalent of DEXRON®-IIE or DEXRON®-III		

FUNCTIONS

NOTE:

For operation of each part, refer to "Table of Component Operation" in this section.

PART NAME	FUNCTION
Front clutch	Meshes input shaft and front sun gear.
Rear clutch	Meshes input shaft and front internal gear and front carrier.
Overdrive brake	Fixes front sun gear.
1st & 2nd brake	Fixes rear sun gear.
Reverse brake	Fixes front carrier and rear internal gear.

TABLE OF COMPONENT OPERATION

Selector position	Gear position \ Part	Front clutch	Rear clutch	Overdrive brake	1st & 2nd brake	Reverse brake
P		○	×	×	×	×
R		○	×	×	×	○
N		○	×	×	×	×
D	1st	○	×	×	○	×
	2nd	×	○	×	○	×
	3rd	○	○	×	×	×
	4th(O/D)	×	○	○	×	×
2	1st	○	×	×	○	×
	2nd	×	○	×	○	×
L	1st	○	×	×	○	×

○ :Operating × :Not operating

TABLE OF SHIFT SOLENOID VALVE OPERATION

Range & Gear	Shift Solenoid Valve			
	A (No.1)	B (No.2)	C (No.3)	D (No.4)
P , N	×	○	×	×
1st gear of O/D, D , 2 , L	×	○	○	×
2st gear of O/D, D , 2 , L	○	×	○	×
3st gear of O/D, D (2 , L)	×	×	×	×
4st gear of O/D	○	×	×	○
R	×	×	×	×

○ :Operating × :Not operating

Electronic Shift Control System

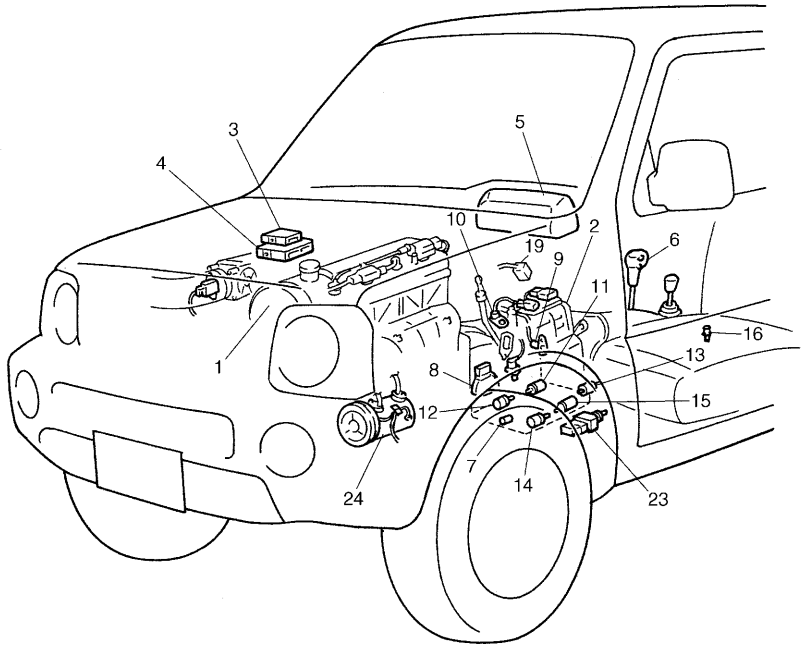

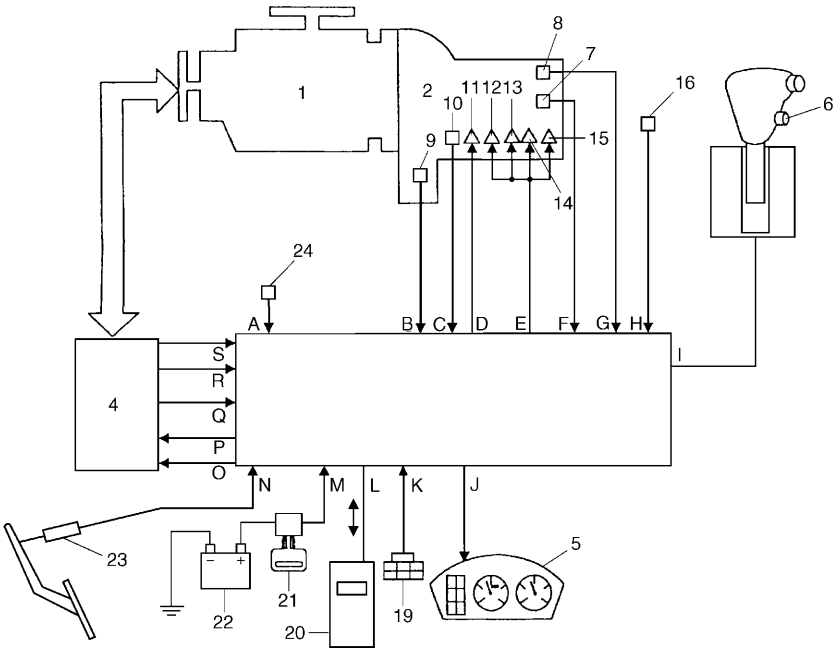

1. Engine	16. Vehicle speed sensor (VSS)	G. Range signal
2. Transmission	17. Blank	H. Vehicle speed signal
3. TCM	18. Blank	I. O/D OFF signal
4. ECM	19. Monitor connector No.2	J. O/D OFF lamp signal
5. Combination meter (O/D OFF lamp)	20. SUZUKI scan tool	K. Diagnosis switch signal
6. O/D off switch	21. Ignition switch	L. SUZUKI scan tool
7. Transmission fluid temp. sensor (A/T fluid temp. sensor)	22. Battery	M. Power supply
8. Transmission range sensor (Shift switch)	23. Brake light switch	N. Brake signal
9. Output shaft speed sensor (A/T VSS)	24. A/C compressor	O. A/T failure signal
10. Input shaft speed sensor (Turbine rev. sensor)	A. A/C on signal	P. Idle up signal
11. TCC solenoid (Lock-up solenoid)	B. A/T output shaft speed signal	Q. Throttle signal
12. Shift solenoid-A (Shift solenoid No.1)	C. Turbine speed signal	R. Engine coolant temp. signal
13. Shift solenoid-B (Shift solenoid No.2)	D. TCC (lock-up) control signal	S. Engine speed (rev.) signal
14. Shift solenoid-C (Shift solenoid No.3)	E. Shift control signal	
15. Shift solenoid-D (Shift solenoid No.4)	F. A/T fluid temp. signal	

Transmission Control Module (TCM)

The TCM is an electronic circuit component that controls gear shift, TCC lock-up and idle-up according to the signal from each sensor. It is a microcomputer consisting of an IC, transistor, diode, etc. It is installed behind glove box.

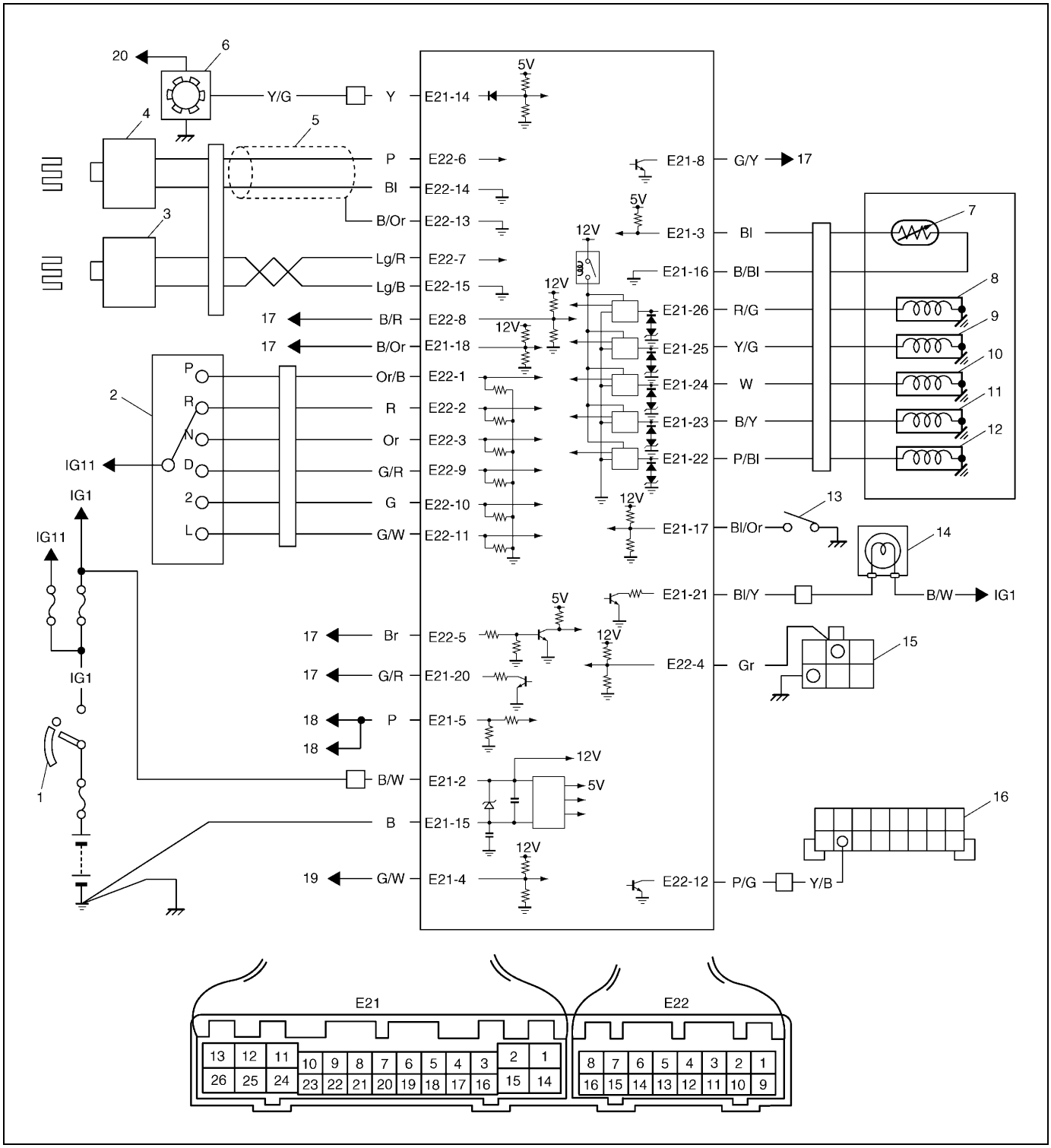

1. Ignition switch	8. Shift solenoid-A (Shift solenoid No.1)	15. Monitor connector No.2
2. Transmission range sensor (Shift switch)	9. Shift solenoid-B (Shift solenoid No.2)	16. DLC
3. Input shaft speed sensor (Turbine rev. sensor)	10. Shift solenoid-C (Shift solenoid No.3)	17. To ECM
4. Output shaft speed sensor (A/T VSS)	11. Shift solenoid-D (Shift solenoid No.4)	18. To A/C
5. Shield wire	12. TCC solenoid (Lock-up solenoid)	19. To brake lamp switch
6. Vehicle speed sensor (VSS)	13. “O/D” cut switch	20. To main relay
7. Transmission fluid temperature sensor (A/T fluid temp. sensor)	14. “O/D OFF” lamp (in combination meter)	21. Terminal arrangement of TCM coupler (Viewed from harness side)

Throttle position sensor

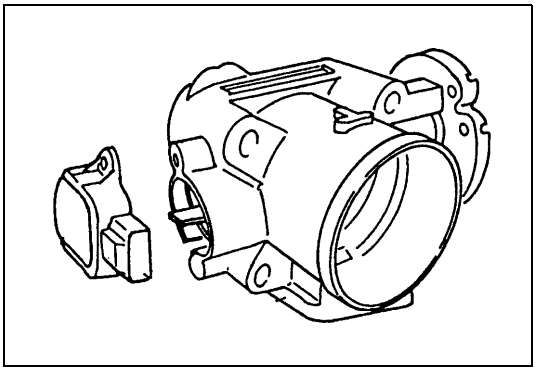

This sensor is installed to the throttle valve shaft. Throttle valve opening signal is transmitted from TP sensor to ECM as voltage signal. The signal is converted to duty signal in ECM and it is sent to TCM.

Output shaft speed sensor

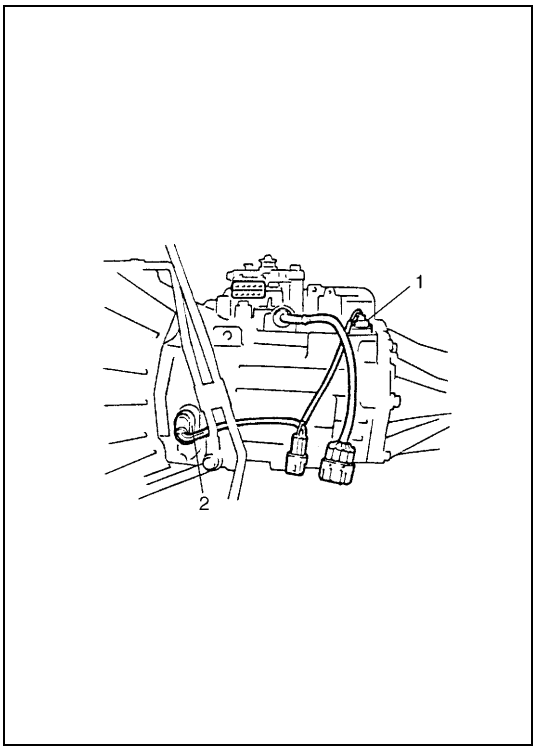

This sensor is a pulse generator type that detects revolution of the counter driven gear (vehicle speed) in the transmission case.
The pulse generator is a noncontact sensor consisting of a permanent magnet, coil and gears.
As the Output shaft turns, the magneflux from the permanent magnet varies and a voltage of the frequency corresponding to the rotor revolution occurs in the coil. This voltage is inputted to the TCM where TCM judges the output shaft revolution or the vehicle speed.

Input shaft speed sensor

This sensor is a pulse generator type that detects revolution of torque converter's turbine shaft in the transmission case.
The principle of operation is the same as the output shaft speed sensor.

1.	Output shaft speed sensor
2.	Input shaft speed sensor

Transmission range sensor (Shift switch)

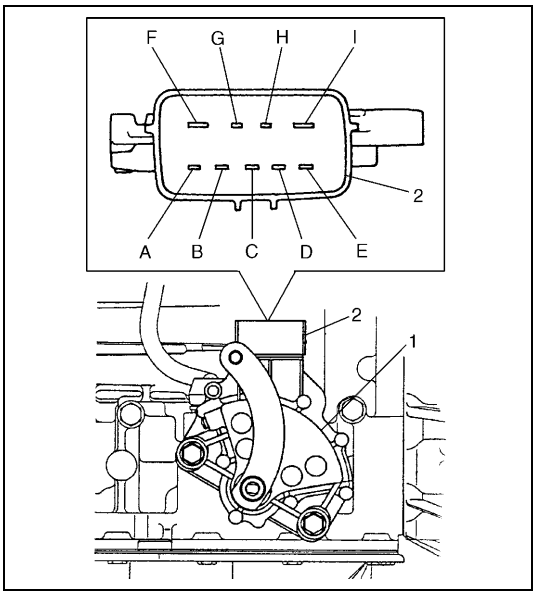

A transmission range sensor (1) is provided so that the engine can be started only when the shift lever is in the "P" or "N" position.

Switch Position \ Terminal No	B	A	H	C	E	D	G	I	F
P			○			○		○	○
R			○		○				
N			○				○	○	○
D			○	○					
2		○	○						
L	○		○						

2.	Transmission range sensor coupler

O/D off switch

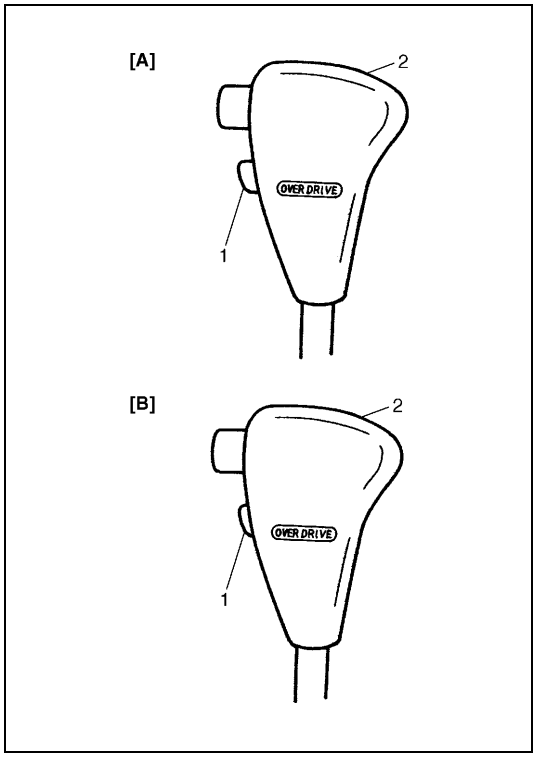

The gear shift up or shift down to and from the O/D gear can be selected with this switch.

O/D off switch (1)	O/D OFF indicator light
ON	ON
OFF	OFF

2.	Shift lever
[A]:	O/D off switch ON
[B]:	O/D off switch OFF

Fail safe function

This function is provided by the safe mechanism that assures safe driveability even when the solenoid valve, sensor or its circuit fails.
The table below shows the fail safe function for each fail condition of sensor, solenoid or its circuit.

Area	Detecting condition	Fail safe function
Input/Turbine speed sensor circuit (DTC P0715)	Input shaft speed sensor signal voltage is too high or too low.	• When vehicle running and in shift change by automatic electronic control, gear is fixed to gear which is going to be selected and lock-up function is turned OFF. • When vehicle running and in no shift change, gear is fixed to gear right before the trouble occurred and lock-up function is turned OFF. • When vehicle is at stop after or during detecting trouble, or in shift change by manual operation while running, gear is fixed as the followings and lock-up function is turned OFF. "P" range → P, "R" range → R, "N" range → N, "D" range → 3rd, "2" range → 2nd, "L" range → 1st
Output shaft speed sensor circuit (DTC P0720)	Output shaft speed sensor signal voltage is too high or too low.	
Shift solenoid (DTC P0753) (DTC P0758) (DTC P0763) (DTC P0768)	• Solenoid output voltage is too high although TCM orders solenoid to turn off. • Solenoid output voltage is too low although TCM orders solenoid to turn on.	• When select lever is "P", "R", "N", "D" or "2" range, A/T power relay is turned OFF and gear is fixed as follows : "P" range → P, "R" range → R, "N" range → N, "D"/"2" range → 3rd • When select lever is "L" range, gear is fixed to pre programmed gear position of several patterns as follows : – Malfunction of No.1 solenoid → 2nd or 3rd – Malfunction of No.2 solenoid → 1st or 3rd – Malfunction of No.3 solenoid → 3rd – Malfunction of No.4 solenoid → 3rd – Malfunction of 2 or more solenoids → 3rd
TCC circuit (DTC P0743)		Lock-up function is turned OFF.
A/T hardware itself (DTC P0730)	Difference in detected revolution between input shaft speed sensor and output shaft speed sensor is too wide.	"P" range → P, "R" range → R, "N" range → N, "D"/"2"/"L" range → To be controlled as follows : 1) When detecting trouble at first, gear is selected well-suited gear calculated with parameters of each sensor's rev. number and gear position just when the trouble occurred. Lock-up function is turned OFF. 2) If A/T can transmit driving force under the above condition, gear is fixed the selected gear until ignition switch is turned OFF. 3) If A/T can not transmit driving force under the above condition, after once vehicle stop, gear which can transmit drive force is searched one by one until gear is found out. After gear is found out, position of gear is held until ignition switch is turned OFF.

Area	Detecting condition	Fail safe function
Transmission range sensor circuit (DTC P0705)	No transmission range sensor signal is inputted or two or more transmission range sensor signals are inputted at the same time.	• When vehicle running, shift range position is fixed to shift range position right before the trouble occurred until vehicle stop and lock-up function is turned OFF. • When vehicle is at stop after or during detecting the trouble, gear is fixed as the followings and lock-up function is turned OFF. – When 2 adjoining gear position signals are inputted. "P", "R" range → R, "R", "N" range → R, "N", "D" range → D, "D", "2" range → D, "2", "L" range → 2nd – When 2 or more signals excepting above or no signal are inputted. "P" range → P, "R" range → R, "N" range → N, "D"/"2"/"L" range → 3rd
Transmission fluid temperature sensor circuit (DTC P0710)	• A/T fluid temp. signal input voltage is too low. • A/T fluid temp. signal input voltage does not go down although standard value of engine rev. signal is inputted.	• When detecting circuit open, TCM control as fluid temperature is 100°C (212°F). • Lock-up function is turned OFF.
Engine speed input circuit (DTC P0725)	Inputted engine rev. signal is too low or too high.	• Engine rev. is processed as 4000 rpm. • No compensation or judgement for gear shift control, for which engine rev. is considered, is processed. • Lock-up function is turned OFF.
Engine coolant temp. signal circuit (DTC P1709)	O/D off signal from ECM require O/D off although A/T fluid temp. is normal operating temp. and engine rev. is standard.	O/D off signal from ECM is not used even though engine coolant temperature is low.
Throttle position signal circuit (DTC P1700)	No or abnormal throttle opening signal is inputted	• Scheduling of automatic gear shift is performed as throttle valve opening is 0%. • Control of automatic gear shift (i.e. control of oil pressure) is performed as throttle valve opening is 100%. • Coast down shifting is performed when brake is applied and engine rev. is less than 1,500 rpm. • Lock-up function is turned OFF.

Automatic gear shift diagram

Automatic shift schedule as a result of shift control is shown below.

	Shift					
Throttle opening	1 → 2	2 → 3	3 → 4	4 → 3	3 → 2	2 → 1
Full throttle	36 (22)	85 (53)	127	118 (73)	74 (46)	30 (19)
Closed throttle	16 (10)	30 (19)	43 (27)	38 (24)	13 (8)	13 (8)

Gear Shift Diagram [A] and TCC lock-up diagram [B]

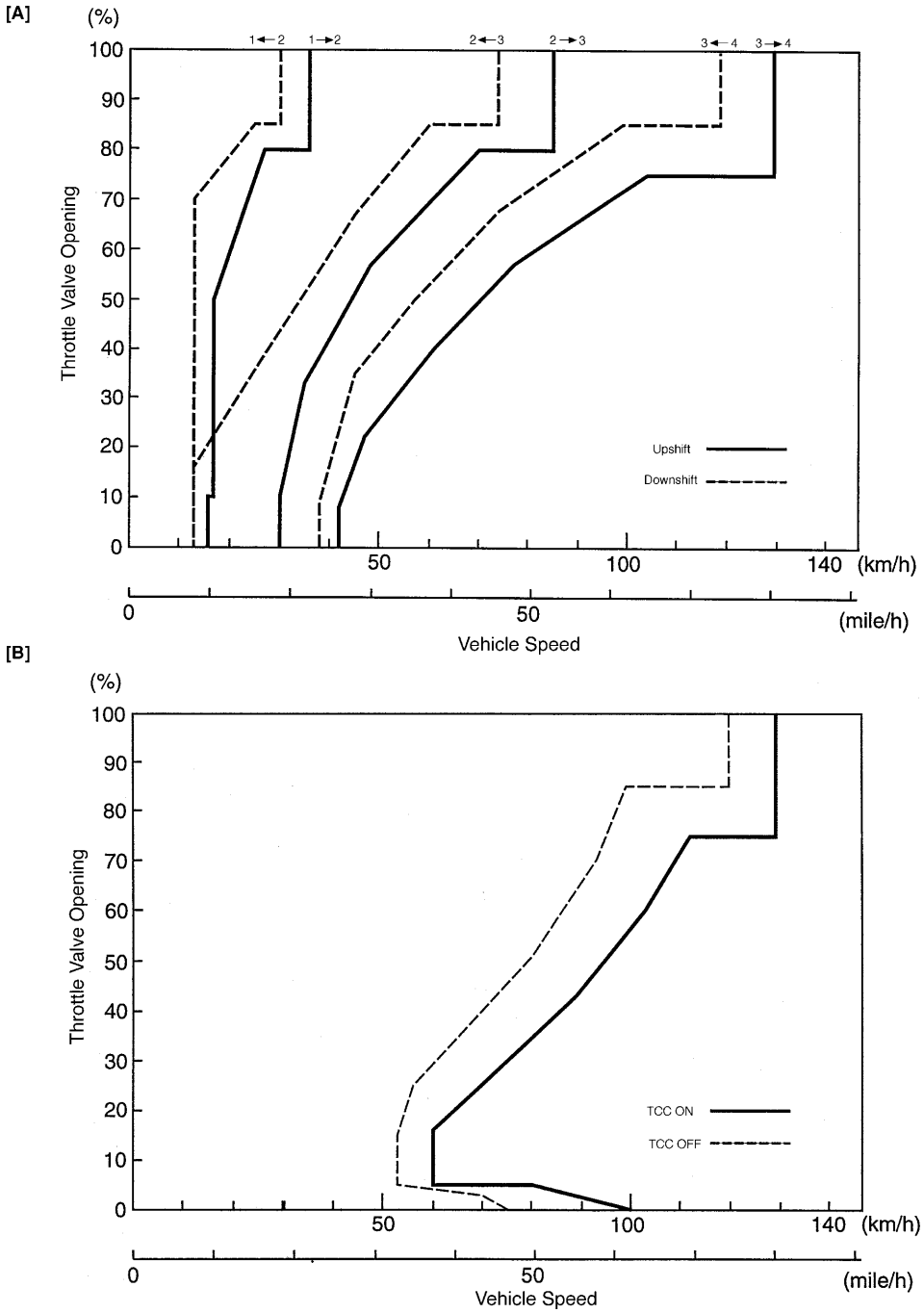

Diagnosis

This vehicle is equipped with an electronic transmission control system, which controls the automatic shift up and shift down timing, etc. suitably to vehicle driving conditions.
When diagnosing a trouble in the transmission including this system, follow “Automatic Transmission Diagnostic Flow Chart” given below to obtain correct result smoothly.

Automatic Transmission Diagnostic Flow Table

NOTE:

For the details of each step, refer to the following.

Step	Action	Yes	No
1	Customer Complaint Analysis 1) Perform customer complaint analysis referring to the following page. Was customer complaint analysis performed according to instruction on the following page?	Go to Step 2.	Perform customer complaint analysis.
2	Diagnostic Trouble Code (DTC) Check, Record and Clearance 1) Check for DTC referring to the following page. Is there any DTC(s)?	Print DTC or write it down and clear it by referring to “DTC Clearance” in this section. Go to Step 3.	Go to Step 4.
3	Visual Inspection 1) Perform visual inspection referring to the following page. Is there any faulty condition?	Repair or replace malfunction part. Go to Step 11.	Go to Step 5.
4	Visual Inspection 1) Perform visual inspection referring to the following page. Is there any faulty condition?		Go to Step 8.
5	Trouble Symptom Confirmation 1) Confirm trouble symptom referring to the following page. Is trouble symptom identified?	Go to Step 6.	Go to Step 7.
6	Rechecking and Record of DTC. 1) Recheck for DTC referring to “DTC Check” in this section. Is there any DTC(s)?	Go to Step 9.	Go to Step 8.
7	Rechecking and Record of DTC. 1) Recheck for DTC referring to “DTC Check” in this section. Is there any DTC(s)?	Go to Step 9.	Go to Step 10.

Step	Action	Yes	No
8	Automatic Transmission Basic Check and Trouble Diagnosis Table 1) Check and repair according to “A/T BASIC CHECK AND TROUBLE DIAGNOSIS TABLE” in this section. Are check and repair complete?	Go to Step 11.	Check and repair malfunction part(s). Go to Step 11.
9	Troubleshooting for DTC 1) Check and repair according to applicable DTC Diagnostic Flow Table. Are check and repair complete?		
10	Check for Intermittent Problems 1) Check for intermittent problems referring to the following page. Is there any faulty condition?	Repair or replace malfunction part(s). Go to Step 11.	Go to Step 11.
11	Final Confirmation Test 1) Clear DTC if any. 2) Perform final confirmation test referring to the following page. Is there any problem symptom, DTC or abnormal condition?	Go to Step 6.	End.

1. CUSTOMER COMPLAINT ANALYSIS

Record details of the problem (failure, complaint) and how it occurred as described by the customer. For this purpose, use of such a questionnaire form as shown below will facilitate collecting information to the point required for proper analysis and diagnosis.

CUSTOMER QUESTIONNAIRE (EXAMPLE)

User name:	Model:	VIN:	
Date of issue:	Date Reg.	Date of problem:	Mileage:
DESCRIPTION OF PROBLEM			
Engine does not start		Engine stops	
Vehicle does not move (forward, rearward)		Transmission does not shift (1st, 2nd, 3rd, 4th, Rev) gear	
No lock-up (TCC clutch operation)		Automatic shift does not occur	
Shift point too high or too low		Transmission slipping in (1st, 2nd, 3rd, 4th, Rev) gear	
Excessive gear change shock		Other	
VEHICLE/ENVIRONMENTAL CONDITION WHEN PROBLEM OCCURS			
Environmental Condition			
Weather	fair/cloudy/rain/snow/always/other( )		
Temperature	hot/warm/cool/cold/( ) °C/always		
Frequency	always/sometimes (times/ day, month)/only once		
Road	urban/suburb/highway/mountainous (uphill/downhill)/tarmacadam/gravel/other( )		
Vehicle Condition			
Transmission range	(P, R, N, D, 2, L) range/(→) range		
Transmission temp.	cold/warming up phase/warmed up		
Vehicle	at stop/during driving (constant speed/accelerating/decelerating/right hand corner/left hand corner)/other ( )/speed (km/h)		
Engine	Speed (r/min)/throttle opening (idle/about %/full)		
Brake	Apply/Not apply		
"O/D OFF" switch	ON/OFF		
MALFUNCTION INDICATOR LAMP ("O/D OFF" LIGHT) FUNCTION			
always ON/sometimes ON/not on			
Diagnostic trouble code indicated/not indicated			
Diagnostic trouble code recorded			

NOTE:

The above form is a standard sample. It should be modified according to conditions characteristic of each market.

2. DIAGNOSTIC TROUBLE CODE (DTC) CHECK, RECORD AND CLEAR

DTCs are indicated by the malfunction indicator lamp. Refer to “Diagnostic Trouble Code(s) Check” in this section. When a DTC is indicated by this lamp, it means existence of a malfunction in the system represented by that code but whether it still exists (current) or it occurred in the past and has gone (history) is unknown. To know it, clear this DTC once (Refer to “How to Clear Diagnostic Trouble Code(s)” in this section.), perform “Test Drive” and/or “Problem Symptom Confirmation” in this section and then check DTC again as described in “Diagnostic Trouble Code(s) Check” in this section. Attempt to diagnose the trouble based on the DTC recorded in this step or failure to clear the DTC in this step may mislead the diagnosis or make diagnosing difficult. Even after checking the DTC with the SUZUKI scan tool, diagnosis should be performed according to this flow chart to check TCM for proper self-diagnosis function.

3 and 4. VISUAL INSPECTION

As a preliminary step, perform visual check of the following items that support proper function of the automatic transmission.

INSPECTION ITEM	REFERRING SECTION
• Engine oil ----- level, leakage	Section 0B
• Engine coolant ----- level, leakage	Section 0B
• A/T fluid ----- level, leakage, color	Section 0B
• Battery ----- fluid level, corrosion of terminal	
• A/T fluid hoses ----- disconnection, looseness, deterioration	
• Connectors of electric wire harness ----- disconnection, friction	Section 8
• Fuses ----- burning	Section 8
• Parts ----- installation, bolt ----- looseness	
• Parts ----- deformation	
• Other parts that can be checked visually	
Also add following items at engine start.	
• Indicator, warning lights in combination meter ----- ON (indicating abnormality in system) or OFF	Section 8
• Other parts that can be checked visually	

5. TROUBLE SYMPTOM CONFIRMATION

Check if what the customer claimed in CUSTOMER COMPLAINT ANALYSIS is actually found in the vehicle and if that symptom is found, whether it is identified as a failure. (This step should be shared with the customer if possible.)

When the symptom is not actually found, possibility is:

- The symptom occurs under certain conditions.
  ----- Retry with the vehicle under different conditions.
- The trouble occurred only temporarily and normal operation has been restored.
  ----- Perform “Diagnostic Trouble Code Check” and if the diagnostic trouble code is indicated, inspect according to the flow table for that DTC.

6 and 7. RECHECKING AND RECORD OF DTC

Refer to “DTC Check” in this section.

8. AUTOMATIC TRANSMISSION BASIC CHECK AND TROUBLE DIAGNOSIS TABLE

Perform basic automatic transmission check according to the list below first. When the end of the list has been reached, check the part of system suspected as a possible cause referring to “Trouble Diagnosis Table” and based on symptoms appearing on vehicle (symptoms obtained through steps of customer complaint analysis, trouble symptom confirmation and/or A/T basic check) and repair or replace faulty parts, if any.

AUTOMATIC TRANSMISSION BASIC CHECK LIST

1) Power Supply Voltage Check
   Check that the battery voltage is within 10 – 14 V at engine stop.
2) A/T Fluid Check
   Check A/T fluid level and quality.
3) STALL TEST
   Perform stall test. Refer to “Stall Test” in this section for details.
4) LINE PRESSURE TEST
   Perform line pressure test. Refer to “Line Pressure Test” in this section.
5) ROAD TEST
   Perform road test to understand correctly the trouble area.
6) Electrical Harness and Coupler Check
   Check the connection of the harness coupler. Check for the loose connection of the harness, loose connection of the terminals.

9. DIAGNOSTIC TROUBLE CODE FLOW TABLE

Based on the DTC indicated in STEP 6 and STEP 7 and referring to “DTC Check”, locate the cause of the trouble, namely in a sensor, switch, wire harness, connector, actuator, TCM or other part and repair or replace faulty parts.

10. CHECK FOR INTERMITTENT PROBLEM

Check parts where an intermittent trouble is easy to occur (e.g. wire harness, connector, etc.), referring to “Intermittent and Poor Connection” in Section 0A and related circuit of DTC recorded in Step 2.

11. FINAL CONFIRMATION TEST

Confirm that the problem symptom has gone and the automatic transmission is free from any abnormal conditions. If what has been repaired is related to the malfunction DTC, clear the DTC once and perform test driving and confirm that a normal code is indicated.

Trouble Diagnosis Table

NOTE:

For the inspection of throttle position sensor, refer to TP SENSOR in Section 6E.

Condition		Possible Cause	Correction
No up-shift	**1st → 2nd** **2nd → 3rd**	• A/T output shaft speed sensor or its circuit faulty	Inspect A/T output shaft speed sensor.
		• Shift solenoid-A (No.1) (1st → 2nd, 2nd → 3rd), -B (No.2) (1st → 2nd), -C (No.3) (2nd → 3rd) or its circuit faulty	Repair or replace.
		• TCM faulty	Replace TCM.
	3rd → 4th	• Transmission temp. sensor or its circuit faulty	Inspect Transmission fluid temp. sensor.
		• A/T output shaft speed sensor or its circuit faulty	Inspect A/T output shaft speed sensor.
		• Shift solenoid-A (No.1), -D (No.4) or its circuit faulty	Repair or replace.
		• O/D OFF switch and/or “O/D OFF” indicator light circuit faulty	Refer to “O/D Off Switch” in this section and/or inspect its circuit.
		• Engine coolant temp. sensor or its circuit faulty	Refer to ECT sensor in Section 6E.
		• TCM faulty	Replace TCM.
No down-shift	**4th → 3rd** **3rd → 2nd** **2nd →1st**	• Shift solenoid-A (No.1) (4th → 3rd, 3rd → 2nd, 2nd → 1st), -B (No.2) (2nd → 1st), -C (No.3) (3rd → 2nd), -D (No.4) (4th → 3rd) or its circuit faulty	Repair or replace.
		• Throttle position sensor or its circuit faulty	Inspect TP sensor.
		• TCM faulty	Replace TCM.
Shift point too high or too low		• Throttle position sensor, A/T output shaft speed sensor or its circuit faulty	Inspect TP sensor and/or A/T output shaft speed sensor.
Vehicle does not move		• Shift solenoid -A (No.1), -B (No.2), -C (No.3) or its circuit faulty	Repair or replace.
Excessive slip		• Shift solenoid -A (No.1) to -D (No.4) or its circuit faulty	Repair or replace.
Excessive shock at N → D or N → R		• Shift solenoid -B (No.2), -C (No.3) or its circuit faulty • ECM (ISC)	Repair or replace. Inspect ECM
No lock-up or No lock-up OFF		• TCC (lock-up) solenoid valve or its circuit faulty	Repair or replace.
		• Throttle position sensor or its circuit faulty	Refer to throttle position sensor in Section 6E.
		• Engine coolant temp. sensor or its circuit faulty	Refer to ECT sensor in Section 6E.
		• Brake light switch circuit faulty	Repair or replace.
		• ECM faulty	Inspect ECM.
Vehicle does not move at any range		• Manual valve faulty	Clean or replace.
		• Primary regulator valve faulty	Clean or replace.

Condition		Possible Cause	Correction
No gear change	**1st ↔ 2nd**	• Shift solenoid-A (No.1) and/or -B (No.2) stuck	Clean or replace.
		• Signal valve faulty	Clean or replace.
	2nd ↔ 3rd	• Shift solenoid -A (No.1), -C (No.3) and/or fail valve No.1 stuck	Clean or replace.
	3rd ↔ 4th	• Shift solenoid-A (No.1), -D (No.4) and/or fail valve No.2 stuck	Clean or replace.
Harsh engagement	**P, N → R**	• Rear clutch accumulator faulty	Clean or replace.
	N → D	• 1st & 2nd brake accumulator faulty	Clean or replace.
	1st → 2nd at D range or 2 range	• Rear clutch accumulator faulty	Clean or replace.
	2nd → 3rd at D range	• Front clutch accumulator faulty	Clean or replace.
	3rd → 4th at D range	• Overdrive brake accumulator faulty	Clean or replace.
	All gear change	• Primary regulator valve faulty	Clean or replace.
Excessive slip (low line pressure)		• Primary regulator valve faulty	Clean or replace.
Vehicle does not move at	**1st and 3rd gear**	• Front clutch faulty	Repair or replace.
	Reverse gear	• Reverse brake faulty	Repair or replace.
	2nd, 3rd, 4th and reverse gear	• Rear clutch faulty	Repair or replace.
	1st and 2nd gear	• 1st & 2nd brake faulty	Repair or replace.
	4th gear	• Overdrive brake faulty	Repair or replace.
	Any forward and reverse gear	• Parking lock pawl faulty	Repair or replace.
Shock or engine stalls when starting off and stopping		• Torque converter clutch faulty	Inspect and replace as necessary.
No up-shift	**1st → 2nd**	• Rear clutch faulty	Repair or replace.
	2nd → 3rd	• Front clutch faulty	Repair or replace.
	3rd → 4th	• Overdrive brake faulty	Repair or replace.
No engine braking	**2nd or 3rd gear**	• Front or rear clutch or 1st & 2nd brake faulty	Repair or replace
	L range 1st gear	• Front clutch or 1st & 2nd brake faulty	Repair or replace.
No lock-up		• Torque converter clutch faulty	Inspect and replace as necessary.
		• Lock-up control valve faulty	Clean or replace.
		• Lock-up solenoid faulty	Clean or replace.
		• Secondary regulator valve faulty	Clean or replace.
		• Signal valve faulty	Clean or replace.
No lock-up OFF		• TCC (lock-up) solenoid faulty	Clean or replace.
		• Lock-up control valve faulty	Clean or replace.

Stall Test

This test is to check overall performance of automatic transmission and engine by measuring stall speed at “D” and “R” ranges. Be sure to perform this test only when transmission fluid is at normal operating temperature and its level is between FULL and LOW marks.

CAUTION:
- **Do not run engine at stall more than 5 seconds continuously, for fluid temperature may rise excessively high.**
- **After performing stall test, be sure to leave engine running at idle for longer than 30 seconds before another stall test.**

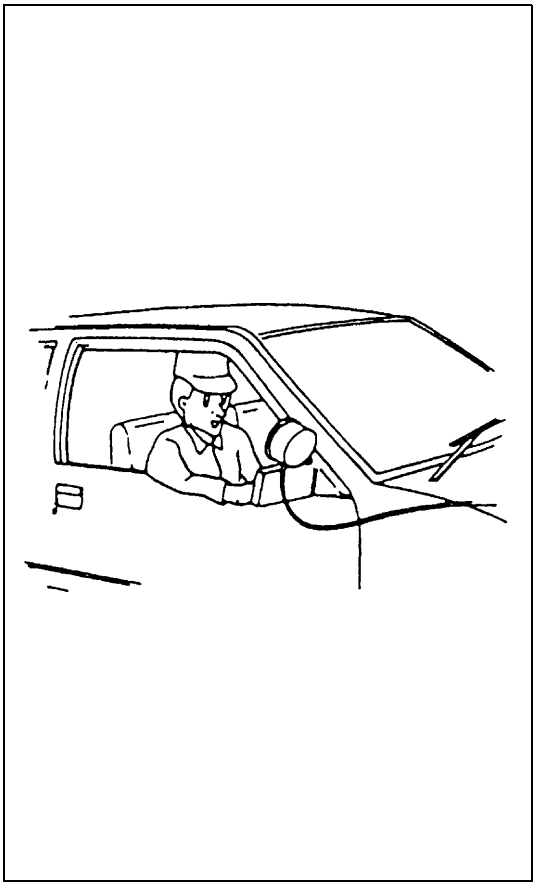

1) Apply parking brake and block wheels.
2) Install tachometer.
3) Start engine with select lever shifted to “P”.
4) Depress brake pedal fully.
5) Shift select lever to “D” and depress accelerator pedal fully while watching tachometer. Read engine rpm quickly when it has become constant (stall speed).
6) Release accelerator pedal immediately after stall speed is checked.
7) In the same way, check stall speed in “R” range.
8) Stall speed should be within following specification.

Engine stall speed
Standard : 2,550 – 2,850 rpm

Troubleshooting

Test result	Possible cause
Lower than standard level	• Lack of engine output • Defective torque converter
Higher than standard level in “D” range	• Malfunctioning 1st & 2nd brake • Malfunctioning rear clutch • Malfunctioning stator one-way clutch
Higher than standard level in “R” range	• Low line pressure • Malfunctioning front clutch • Malfunctioning reverse brake • Malfunctioning stator one-way clutch

Time Lag Test

This test is to check conditions of clutch, reverse brake and fluid pressure. “Time lag” means time elapsed since select lever is shifted with engine idling till shock is felt.

1) With chocks placed in front and behind front and rear wheels respectively, depress brake pedal.
2) Start engine.
3) With stop watch ready, shift select lever from “N” to “D” range and measure time from that moment till shock is felt.

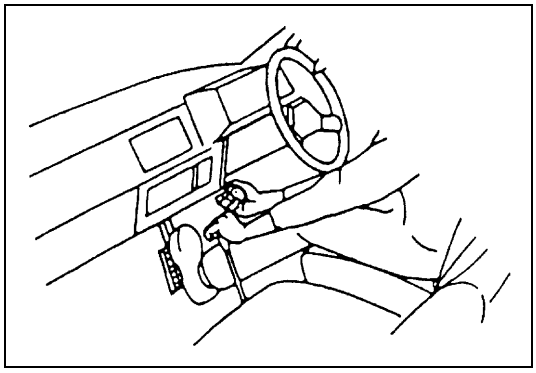

4) Similarly measure time lag by shifting select lever from “N” to “R” range.

Gear shifting time lag
“N” → “D” : Less than 1.0 sec.
“N” → “R” : Less than 1.4 sec.

NOTE:

- **When repeating this test, be sure to wait at least minute after select lever is shifted back to “N” range.**
- **Engine should be warmed up fully for this test.**

Troubleshooting

Test result	Possible cause
When “N” → “D” time lag exceeds specification.	• Low line pressure • Worn front clutch • Worn 1st & 2nd brake
When “N” → “R” time lag exceeds specification.	• Low line pressure • Worn front clutch • Worn reverse brake

Line Pressure Test

Purpose of this test is to check operating conditions of each part by measuring fluid pressure in fluid pressure line.
Line pressure test requires following conditions.

- Automatic fluid is at normal operating temperature (70 – 80 °C /158 – 176 °F).
- Fluid is filled to proper level (between FULL and LOW on dipstick).

1) Apply parking brake securely and place chocks against wheels.

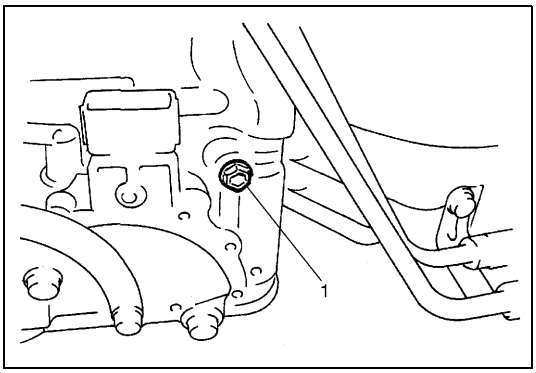

2) Remove fluid pressure check hole plug bolt (1).
3) Attach oil pressure gauge to fluid pressure check hole in transmission case.

Special tool
(A) : 09925-37810

CAUTION:
After attaching oil pressure gauge, check that no fluid leakage exists.

4) Depress foot brake fully, run engine at idle and stall then check fluid pressure in “D” or “R” range.

CAUTION:
Do not continue running engine at stall speed longer than 5 seconds.

Automatic transmission line pressure

	“D” range	**“R” range**
At idle speed	**8.2 – 9.6 kg/cm^2** **116.6 – 136.5 psi**	**13.0 – 16.0 kg/cm^2** **184.9 – 227.5 psi**
At stall speed	**8.2 – 9.6 kg/cm^2** **116.6 – 136.5 psi**	**13.0 – 16.0 kg/cm^2** **184.9 – 227.5 psi**

Troubleshooting

Test result	Possible cause
Line pressure higher than standard level in each range	• Malfunctioning regulator valve
Line pressure lower than standard level in each rang	• Malfunctioning regulator valve • Defective oil pump
Line pressure lower than standard level only in “D” range	• Fluid leakage from “D” range pressure circuit • Fluid leakage from 1st & 2nd brake • Fluid leakage from front clutch
Line pressure lower than standard level only in “R” range	• Fluid leakage from “R” range pressure circuit • Fluid leakage from front clutch • Fluid leakage from reverse brake

Engine Brake Test

WARNING:

Before test, make sure that there is no vehicle behind so as to prevent rear-end collision.

1) While driving vehicle in 3rd gear of “D” range, shift select lever down to “2” range and check if engine brake operates.
2) In the same way as in Step 1), check engine brake for operation when select lever is shifted down to “L” range.
3) Engine brake should operate in above test.

Troubleshooting

Test result	Possible cause
Fails to operate when shifted down to “2” range	• Defective shift switch
Fails to operate when shifted down to “L” range	• 1st & 2nd brake defective • Defective A/T

“P” Range Test

1) Stop vehicle on a slope, shift select lever to “P” range and at the same time apply parking brake.
2) After stopping engine, depress brake pedal and release parking brake.
3) Then, release brake pedal gradually and check that vehicle remains stationary.
4) Depress brake pedal and shift select lever to “N” range.
5) Then, release brake pedal gradually and check that vehicle moves.

WARNING:

Before test, check that no one is around vehicle or down on a slope and keep watchful for safety during test.

Troubleshooting

Test result	Possible cause
Vehicle moves at “P” range or remains stationary at “N” range	Defective parking lock pawl or spring

Electronic Control System Diagnosis

TCM has on-board diagnostic system (a system self-diagnosis function).
Investigate where the trouble is by referring to “Diagnostic Flow Table” and “Diagnostic Trouble Code Table” on later pages.

Precautions in diagnosing troubles

[PRECAUTIONS IN IDENTIFYING DIAGNOSTIC TROUBLE CODE]

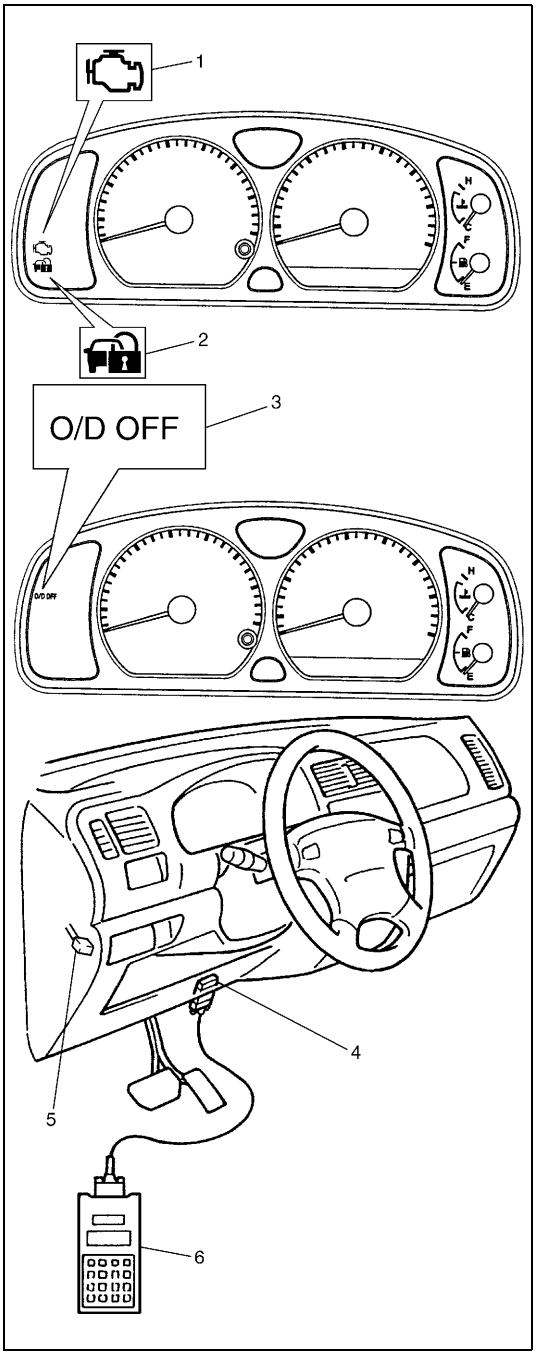

- For vehicle equipped with immobilizer indicator lamp (2) (which comes on when turning on ignition switch leaving engine OFF), malfunction indicator lamp (MIL) (1) comes on when TCM detests malfunction of automatic transmission system.
  But MIL does not come on in case of DTC P1887.
- For vehicle equipped without immobilizer indicator lamp (2), malfunction indicator lamp (MIL) (1) does not come on although TCM detests malfunction of automatic transmission system.
- Using SUZUKI scan tool (Tech-1) (6), diagnostic trouble code (DTC) stored in TCM memory can be checked and cleared as well.
  Before its use, be sure to read Operator’s (instruction) Manual supplied with it carefully to have good understanding of its functions and usage.
- Not using scan tool, the DTC stored in TCM memory also can be checked and cleared.
  DTC stored in the TCM memory is outputted by flashing of “O/D OFF” lamp (3) with diagnosis switch terminal of monitor connector No.2 (5) grounded.
  If no DTC is stored in TCM memory, DTC No.12 is outputted repeatedly.
  If no DTC is stored in TCM memory, they are outputted starting from smallest code number in increasing order.
  After all DTCs are outputted, all DTCs are outputted repeatedly.
- Be sure to read “Precautions for Electrical Circuit Service” in Section 0A before inspection and observe what is written there.
- When replacing TCM with used one, learning control memory in TCM should be initialized after the replacement referring to “Learning Control Memory Initialization” in this section.

4. Data link connector (DLC)

Diagnostic Trouble Code(s) Check

[Check DTC with SUZUKI scan tool]

1) Turn ignition switch OFF.

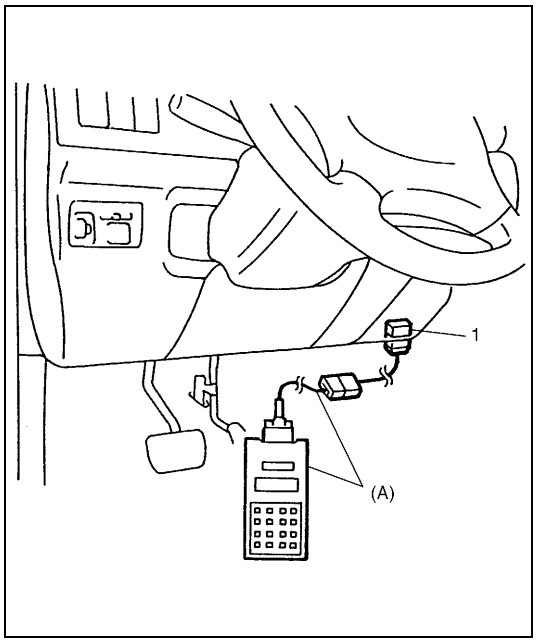

2) After setting cartridge to connect SUZUKI scan tool to data link connector (DLC) (1) located on underside of instrument panel at driver's seat side.

Special tool
(A) : SUZUKI scan tool

3) Turn ignition switch ON.
4) Read DTC according to instructions displayed on SUZUKI scan tool and print it or write it down. Refer to SUZUKI scan tool operator's manual for further details.
5) After completing the check, turn ignition switch OFF and disconnect SUZUKI scan tool from data link connector (DLC).

[Check DTC without SUZUKI scan tool]

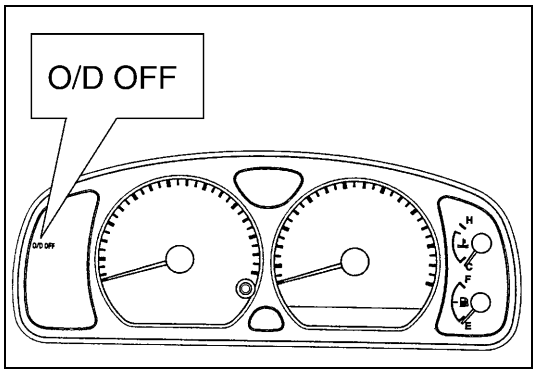

1) Turn ignition switch ON and make sure that O/D OFF light is OFF in combination meter (O/D off switch OFF).

2) Turn ignition switch OFF.

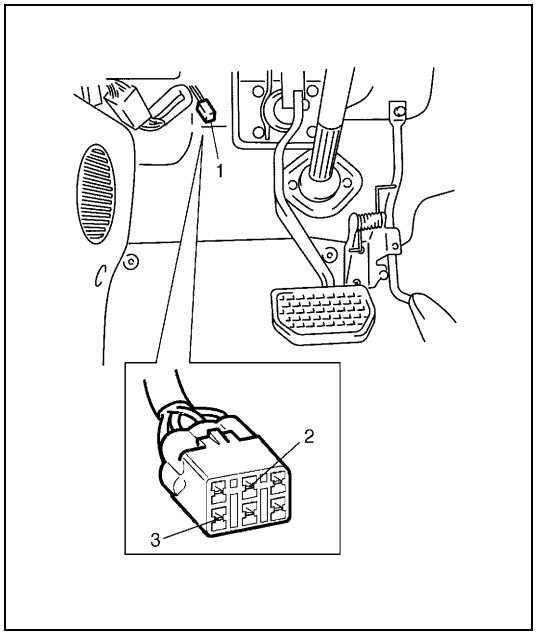

3) Using service wire, ground diagnosis switch terminal (2) of monitor connector No.2 (1).

3. Ground terminal

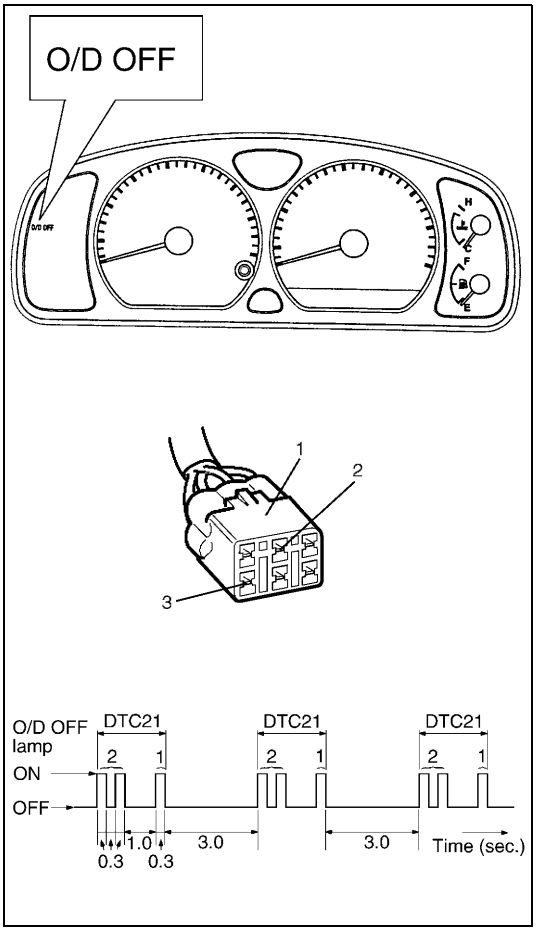

4) Read DTC from flashing pattern of O/D OFF lamp.

5) After completing the DTC check, turn ignition switch OFF and disconnect service wire from monitor connector No.2 (1).

2.	Diagnosis switch terminal
3.	Ground terminal

Diagnostic Trouble Code(s) Clearance

[Clear DTC with SUZUKI scan tool]

1) Turn ignition switch OFF.

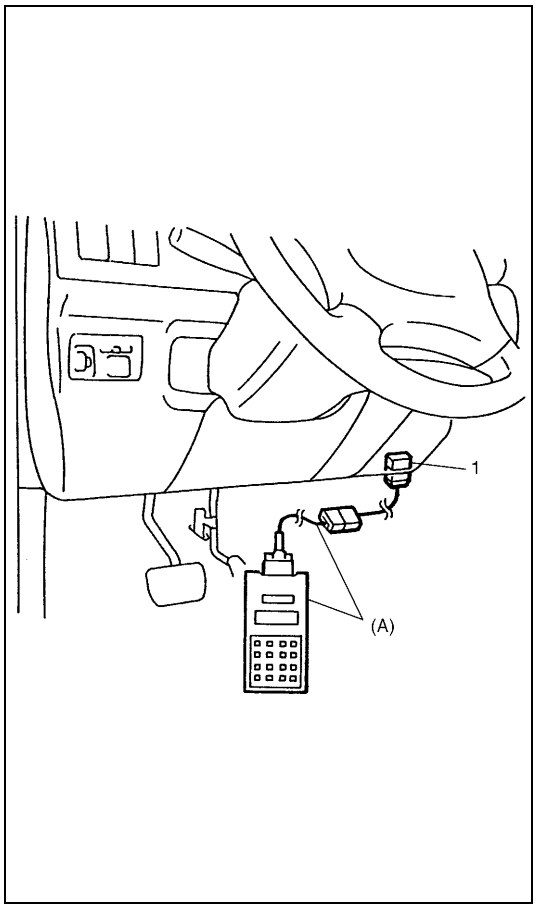

2) After setting cartridge to SUZUKI scan tool connect it to data link connector (DLC) (1) located on underside of instrument panel at driver's seat side.

Special tool
(A) : SUZUKI scan tool

3) Turn ignition switch ON.
4) Erase DTC according to instructions displayed on SUZUKI scan tool. Refer to SUZUKI scan tool operator's manual for further details.
5) After completing the check, turn ignition switch OFF and disconnect SUZUKI scan tool from data link connector (DTC).

[Clear DTC without SUZUKI scan tool]

1) Turn ignition switch ON.
2) Using service wire ground diagnosis switch terminal of monitor connector No.2 five times within 10 seconds.
3) Perform "DTC Check" and confirm that only DTC 12 (normal DTC) is displayed. If not repeat step 1) and 2) and check again.

Diagnostic Trouble Code (DTC) Table

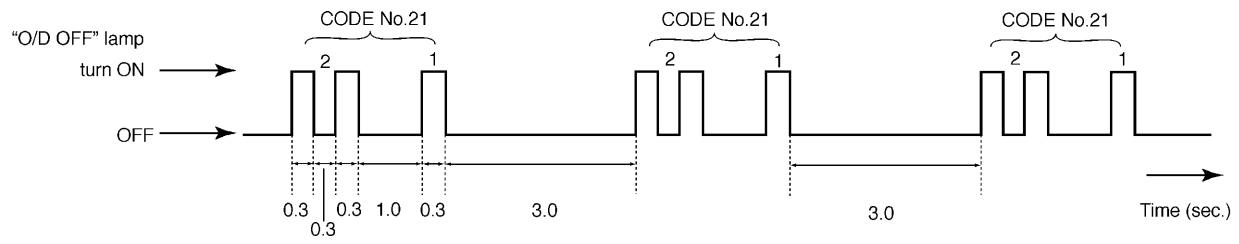

DTC NO.		"O/D OFF" Light Flashing Pattern of DTC (Not using scan tool)	DETECTING ITEMS	MIL	
Using scan tool	Not using scan tool			Vehicle equipped with immobilizer indicator lamp	Vehicle equipped without immobilizer indicator lamp
–	12		Normal	–	–
P0715	14		Input/Turbine speed sensor circuit	1 driving cycle	Not applicable
P0730	18		Incorrect gear ratio	2 driving cycles	Not applicable
P0753	21		Shift solenoid-A electrical	1 driving cycle	Not applicable
	22				
P0758	23		Shift solenoid-B electrical	1 driving cycle	Not applicable
	24				
P0763	43		Shift solenoid-C electrical	1 driving cycle	Not applicable
	44				
P0768	45		Shift solenoid-D electrical	1 driving cycle	Not applicable
	46				

DTC NO.		"O/D OFF" Light Flashing Pattern of DTC (Not using scan tool)	DETECTING ITEMS	MIL	
Using scan tool	Not using scan tool			Vehicle equipped with immobilizer indicator lamp	Vehicle equipped without immobilizer indicator lamp
P0743	25		Torque converter clutch (lock-up clutch) circuit electrical	1 driving cycle	Not applicable
	26				
P0741	29		Torque converter clutch (lock-up clutch) circuit performance or stuck off	2 driving cycles	Not applicable
P0720	31		Output shaft speed sensor circuit	1 driving cycle	Not applicable
P1700	32		Throttle position signal input malfunction	1 driving cycle	Not applicable
	33				
P0705	34		Transmission range sensor circuit malfunction	1 driving cycle	Not applicable
P0725	35		Engine speed input circuit	2 driving cycles	Not applicable
P0710	36		Transmission fluid temperature sensor circuit	2 driving cycles	Not applicable
	38				
P1709	51		Engine coolant temperature signal circuit	1 driving cycle	Not applicable
P0702	52		Transmission control system electrical	1 driving cycle	Not applicable
P1702			Internal malfunction of TCM		
P1887	57		VSS signal circuit	Not applicable	Not applicable

TCM Power and Ground Circuit Check

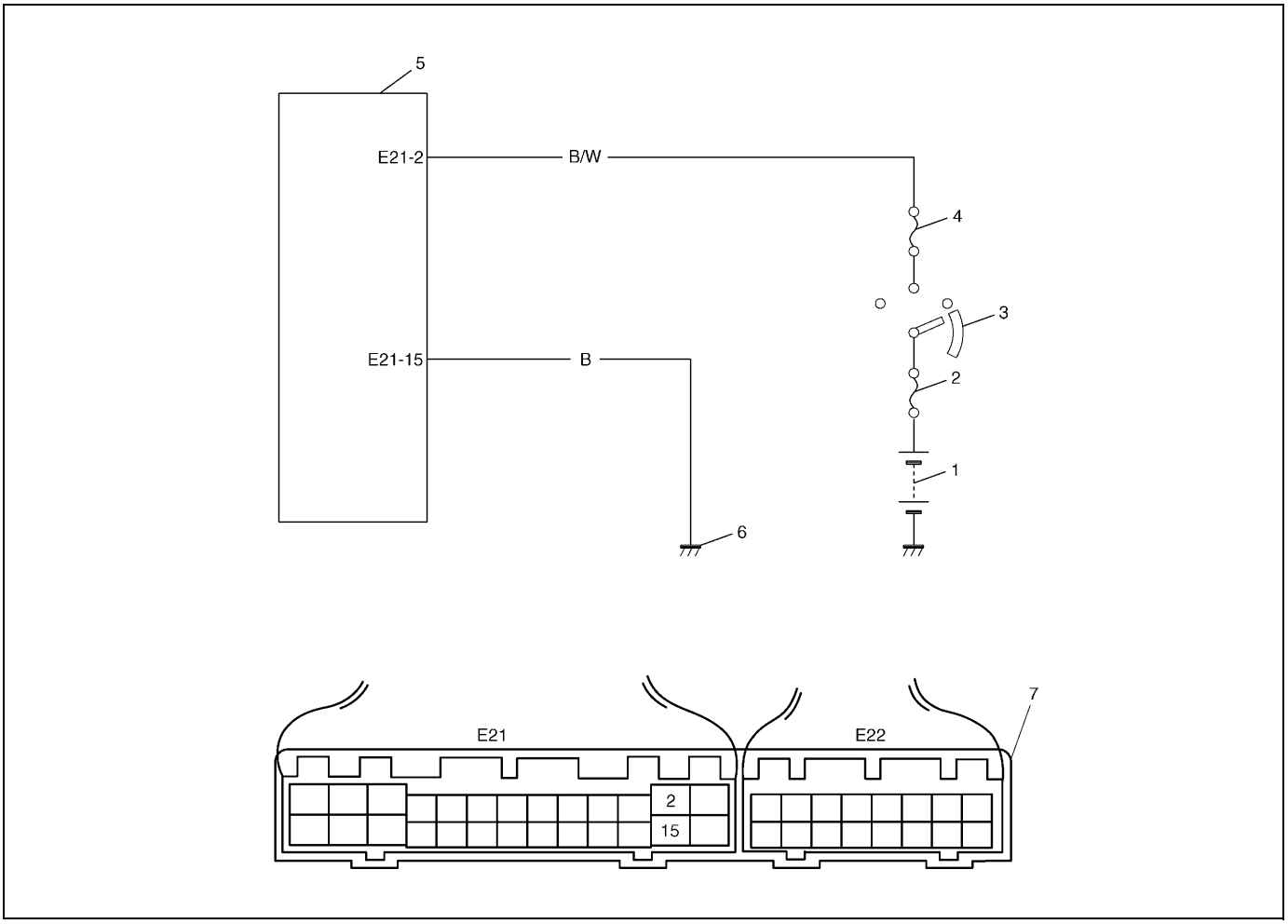

1. Battery	4. Circuit fuse (IG)	7. Terminal arrangement of TCM coupler (Viewed from harness side)
2. Main fuse	5. TCM	
3. Ignition switch	6. Ground	

Step	Action	Yes	No
1	Check voltage between terminal “E21-2” of TCM coupler and body ground with ignition switch ON. Is it 10 – 14 V?	Go to Step 2.	“B/W” wire open.
2	Check voltage between terminal “E21-15” of TCM coupler and body ground with ignition switch ON. Is it about 0 V?	Poor “E21-2” or “E21-15” connection. If all above are OK, substitute a known-good TCM and recheck.	“B” wire open.

DTC P0715/DTC No.14 Input / Turbine Speed Sensor Circuit

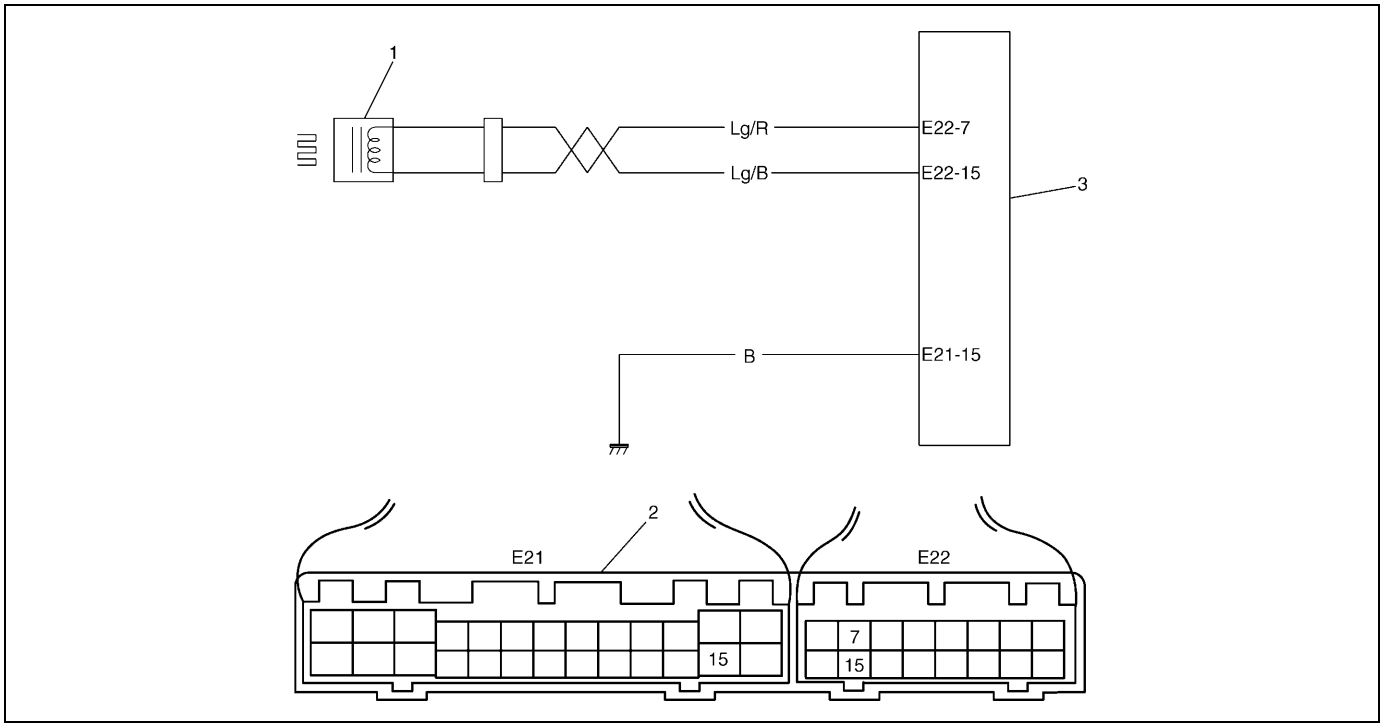

1. Input shaft speed sensor	2. Terminal arrangement of TCM coupler (viewed from harness side)	3. TCM

DTC DETECTING CONDITION
Input shaft speed sensor signal voltage is too high or too low.

Step	Action	Yes	No
1	Was “Automatic Transmission Diagnostic Flow Chart” performed?	Go to Step 2.	Go to “Automatic Transmission Diagnostic Flow Chart”.
2	1) Turn ignition switch OFF and disconnect output shaft speed sensor – input shaft speed sensor coupler. 2) Measure resistance between terminals of the disconnected sensor side coupler. Is it 160 – 200 Ω? See figure.	Go to Step 3.	Replace input shaft speed sensor.
3	1) Connect output shaft speed sensor – input shaft speed sensor coupler then disconnect TCM couplers. 2) Measure resistance between terminal “E22-7” and “E22-15” of disconnected harness side coupler. Is it 160 – 200 Ω?	Go to Step 4.	“Lg/R” or “Lg/B” wire open or shorted each other.
4	1) Turn ignition switch OFF and connect input shaft speed sensor coupler then disconnect TCM couplers. 2) Measure resistance between terminal “E22-7” of disconnected harness side coupler and body ground then terminal “E22-15” of disconnected harness side coupler and body ground. Are they about 0 Ω? See figure.	Short in between “Lg/R” wire and ground or “Lg/B” wire and ground.	Poor connection of terminal “E22-7” or “E22-15” of TCM. If all the above are in good condition, substitute a known-good TCM and recheck.

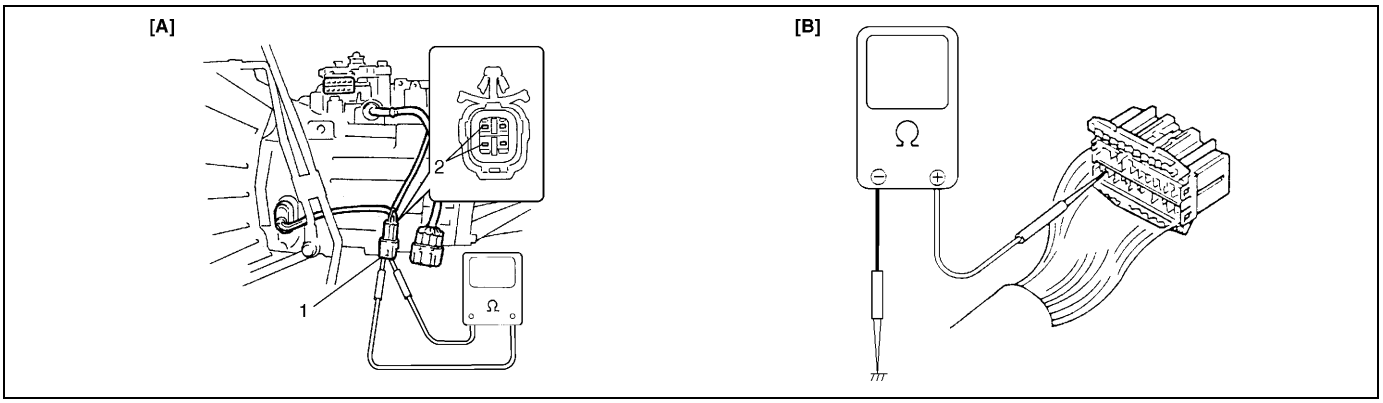

[A]:	Fig. for Step 2
[B]:	Fig. for Step 4
1.	Input shaft speed sensor coupler
2.	Input shaft speed sensor terminal

DTC P0730/DTC No. 18 Incorrect Gear Ratio

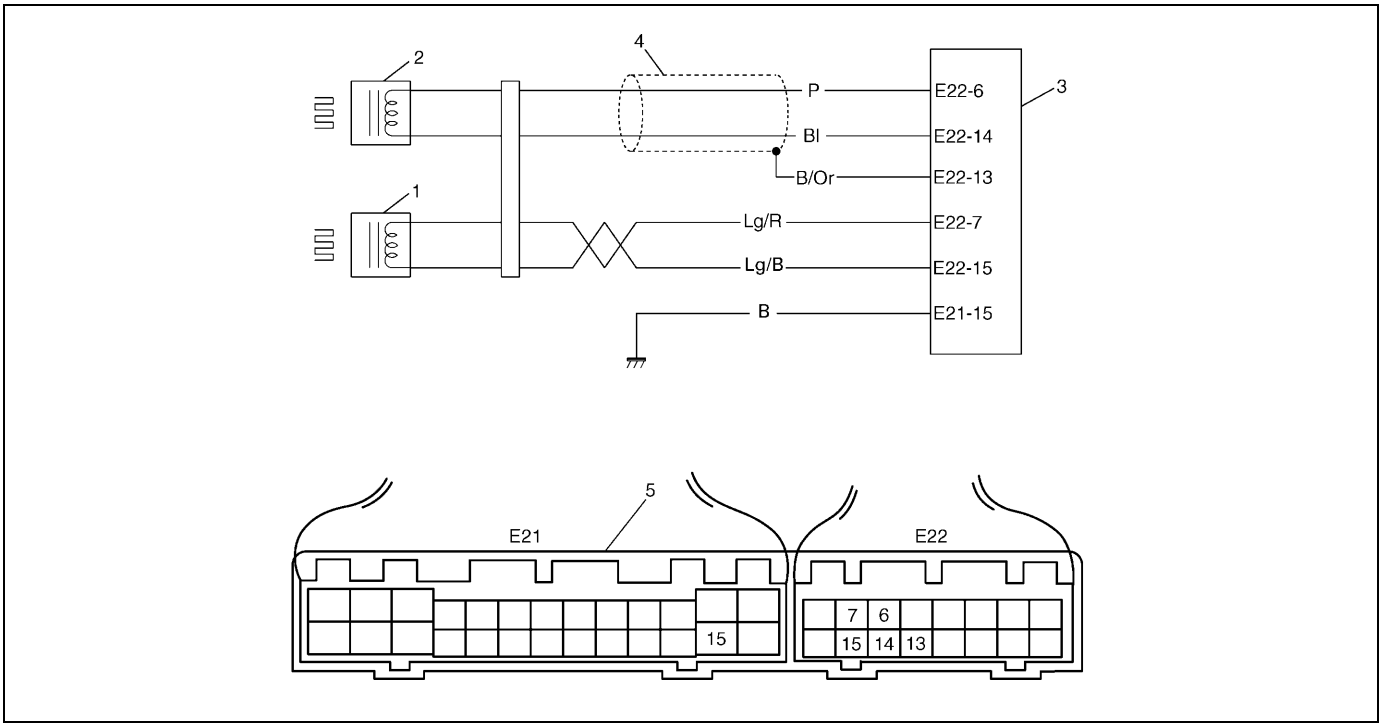

1. Input shaft speed sensor	4. Shield wire
2. Output shaft speed sensor	5. Terminal arrangement of TCM coupler (viewed from harness side)
3. TCM	

DTC DETECTING CONDITION
Difference in detected revolution between input shaft speed sensor and output shaft speed sensor is too wide.

Step	Action	Yes	No
1	Check if DTC P0730/DTC No.18 displayed with DTC P0715/DTC No.14 or DTC P0720/DTC No.31. Is DTC P0730/DTC No.18 displayed with DTC P0715/DTC No.14 or DTC P0720/DTC No.31? See figure.	Inspect according to DTC P0715/DTC No.14 or DTC P0720/DTC No.31 flow table first.	Go to Step 2.
2	1) Turn ignition switch OFF and disconnect TCM couplers. 2) Measure resistance between terminal “E22-13” of the disconnected harness side coupler and body ground. Is it about 0 Ω? See figure.	Short in between shield portion or “B/Or” wire and ground.	Go to Step 3.

Step	Action	Yes	No
3	Check input shaft speed sensor and output shaft speed sensor referring to each item in this section. Are they OK? See figure.	• Broken wire in shield portion or broken “B/Or” wire, or shorted to power source circuit. • Malfunction of A/T itself (clutch slipping, etc.) If all the above are in good condition, substitute a known-good TCM and recheck.	Inspect and replace referring to each item in this section.

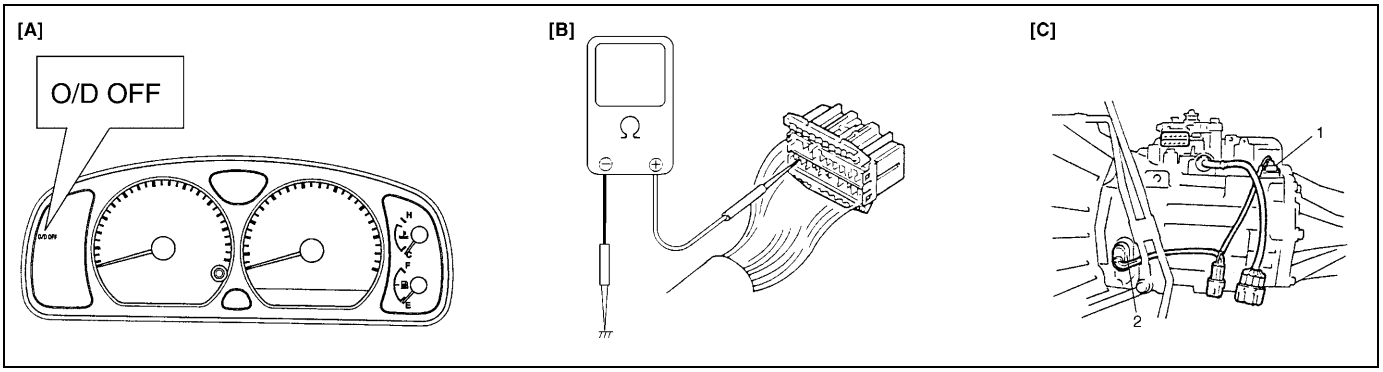

[A]:	Fig. for Step 1
[B]:	Fig. for Step 2
[C]:	Fig. for Step 3
1.	Output shaft speed sensor
2.	Input shaft speed sensor

DTC P0753/DTC No.21/22 Shift Solenoid-A (No.1) Electrical
DTC P0758/DTC No.23/24 Shift Solenoid-B (No.2) Electrical
DTC P0763/DTC No.43/44 Shift Solenoid-C (No.3) Electrical
DTC P0768/DTC No.45/46 Shift Solenoid-D (No.4) Electrical
DTC P0743/DTC No.25/26 TCC (Lock-Up Clutch) Circuit Electrical

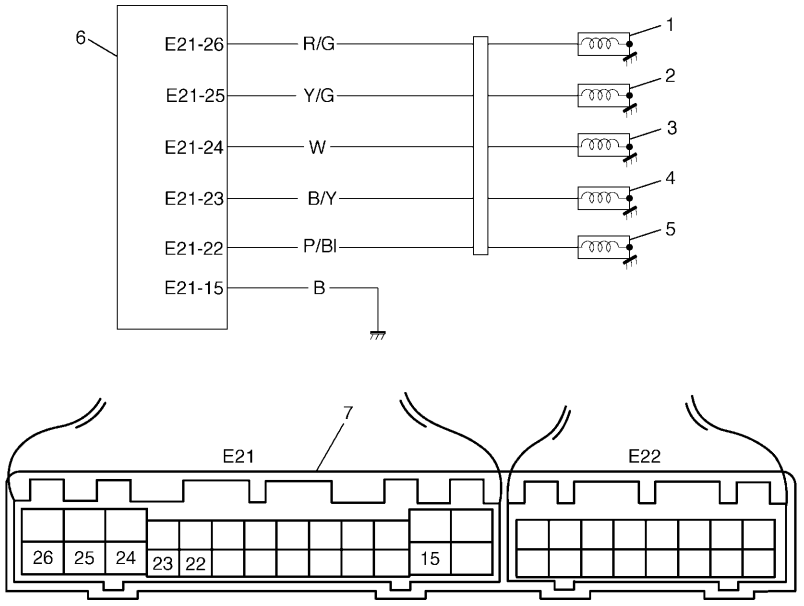

1. Shift solenoid-A (No.1)	4. Shift solenoid-D (No.4)	7. Terminal arrangement of TCM coupler (viewed from harness side)
2. Shift solenoid-B (No.2)	5. TCC (lock-up) solenoid	
3. Shift solenoid-C (No.3)	6. TCM	

DTC DETECTING CONDITION
• Solenoid output voltage is too high although TCM orders solenoid to turn OFF. • Solenoid output voltage is too low although TCM orders solenoid to turn ON.

Step	Action	Yes	No
1	1) Turn ignition switch OFF and disconnect solenoid coupler. 2) Measure the resistance between each solenoid terminal of the solenoid side coupler and transmission ground. Is it 11 – 15 Ω? See figure.	Go to Step 2.	• Solenoid lead wire open or shorted to ground. • Malfunction of solenoid.
2	Is DTC No.22, 24, 44, 46 or 26?	Go to Step 4.	Go to Step 3.
3	Is DTC No.21, 23, 43, 45 or 25?	Go to Step 6.	Go to Step 5. (When DTC is P0753, P0758, P0763, P0768 or P0743.)

Step	Action	Yes	No
4	1) Disconnect TCM couplers. 2) Measure the resistance between terminal "E21-26", "E21-25", "E21-24", "E21-23" or "E21-22" of the disconnected harness side TCM coupler and body ground. Is it about 0 Ω? See figure.	"R/G", "Y/G", "W", "B/Y" or "P/Bl" wire shorted to ground.	Substitute a known-good TCM and recheck.
5	1) Disconnect TCM couplers. 2) Measure the resistance between terminal "E21-26", "E21-25", "E21-24", "E21-23" or "E21-22" of the disconnected harness side TCM coupler and body ground. Is it about 0 Ω? See figure.	"R/G", "Y/G", "W", "B/Y" or "P/Bl" wire shorted to ground.	Go to Step 6.
6	1) Connect solenoid coupler then disconnect TCM couplers. 2) Measure the resistance between each solenoid terminal of the disconnected harness side TCM coupler and body ground. Is it 11 – 15 Ω?	Go to Step 7.	"R/G", "Y/G", "W", "B/Y" or "P/Bl" wire open or poor connection of shift solenoid coupler.
7	Turn ignition switch ON then measure voltage between terminal "E21-26", "E21-25", "E21-24", "E21-23" or "E21-22" of the disconnected harness side TCM coupler and body ground. Is it about 0 V?	Poor connection at terminal "E21-26", "E21-25", "E21-24", "E21-23" or "E21-22" of TCM. If all the above are in good condition, substitute a known-good TCM and recheck.	"R/G", "Y/G", "W", "B/Y" or "P/Bl" wire or shift solenoid lead wire shorted to power source circuit.

Solenoid	Terminal Number	Lead Wire Color	Terminal Number of Shift Solenoid Coupler (shift solenoid side)
Shift solenoid-A (No.1)	E21-26	R/G	3
Shift solenoid-B (No.2)	E21-25	Y/G	4
Shift solenoid-C (No.3)	E21-24	W	5
Shift solenoid-D (No.4)	E21-23	B/Y	6
TCC (lock-up) solenoid	E21-22	P/Bl	1

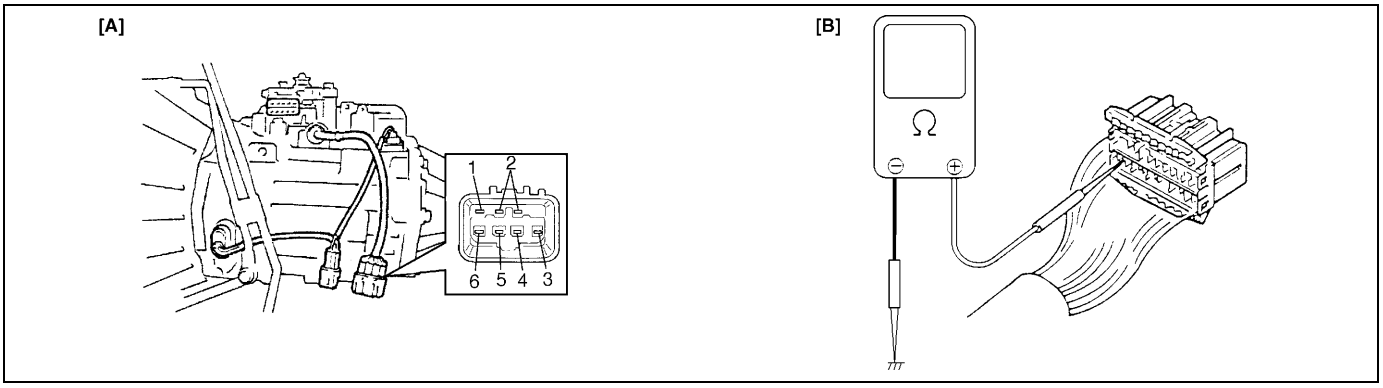

[A]: Fig. for Step 1/5	2. Transmission fluid temp. sensor terminal	5. Shift solenoid-C (No.3) terminal
[B]: Fig. for Step 4	3. Shift solenoid-A (No.1) terminal	6. Shift solenoid-D (No.4) terminal
1. TCC (lock-up) solenoid terminal	4. Shift solenoid-B (No.2) terminal	

DTC P0741/DTC No.29 TCC (Lock-Up) Circuit Performance or Stuck OFF

DTC DETECTING CONDITION
• Difference between turbine rev. and engine rev. is too close even though TCM ordered TCC solenoid to turn OFF. • Difference between turbine rev. and engine rev. is too wide even though TCM ordered TCC solenoid to turn ON.

Step	Action	Yes	No
1	Was “Automatic Transmission Diagnostic Flow Chart” performed?	Go to Step 2.	Go to “Automatic Transmission Diagnostic Flow Chart”.
2	Check TCC (lock-up) solenoid referring to “Shift Solenoid Valve and TCC (Lock-Up) Solenoid Valve Inspection” in this section. Is it in good condition?	Go to Step 3.	Replace TCC (lock-up) solenoid.
3	Check valve body for fluid passage clog, or lock-up control valve, secondary regulator valve or signal valve stuck, referring to “Transmission Unit Repair Overhaul” in this section. Are they in good condition?	Go to Step 4.	Faulty valve body.
4	Substitute a known-good torque converter and recheck. Is it OK?	Torque converter malfunction.	Overhaul and repair automatic transmission.

DTC P0720/DTC No. 31 Output Shaft Speed Sensor Circuit

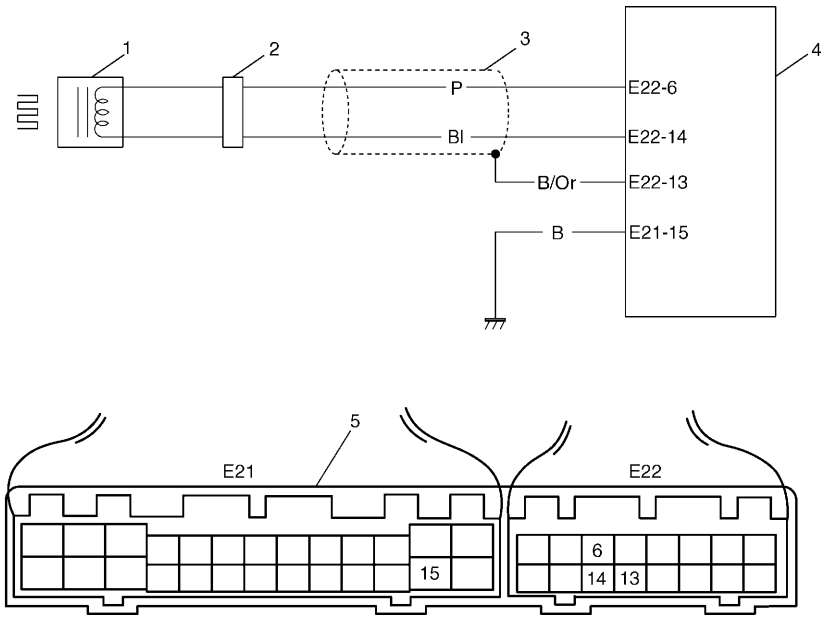

1. Output shaft speed sensor (A/T VSS)	4. TCM
2. Coupler	5. Terminal arrangement of TCM coupler (viewed from harness side)
3. Shield wire	

DTC DETECTING CONDITION
Output shaft speed sensor signal voltage is too high or too low.

Step	Action	Yes	No
1	1) Turn ignition switch OFF and disconnect output shaft speed sensor – input shaft speed sensor coupler (1). See figure. 2) Measure resistance between terminals of disconnected sensor side coupler. Is it 160 – 200 Ω? See figure.	Go to Step 2.	Replace output shaft speed sensor.
2	1) Connect output shaft speed sensor coupler then disconnect TCM couplers. 2) Measure resistance between terminal “E22-6” and “E22-14” of disconnected harness side coupler. Is it 160 – 200 Ω? See figure.	Go to Step 3.	“P” or “Bl” wire open or shorted each other.

Step	Action	Yes	No
3	1) Turn ignition switch OFF and disconnect output shaft speed sensor – input shaft speed sensor coupler. See figure. 2) Measure resistance between terminal “3” of disconnected sensor side coupler and body ground then terminal “4” of disconnected sensor side coupler and body ground. Is it about 0 Ω? See figure.	Replace output shaft speed sensor.	Go to Step 4.
4	1) Turn ignition switch OFF and connect output shaft speed sensor coupler then disconnect TCM couplers. 2) Measure resistance between terminal “E22-6” of disconnected harness side coupler and body ground then terminal “E22-14” of disconnected harness side coupler and body ground. Is it about 0 Ω? See figure.	“P” or “Bl” wire shorted to ground.	Go to Step 5.
5	Measure resistance between terminal “E22-6” and “E22-13” of disconnected harness side coupler then terminal “E22-14” and “E22-13” of disconnected harness side coupler. Is it about 0 Ω? See figure.	“P” wire or “B” wire shorted to shield portion.	Poor connection of terminal “E22-6” or “E22-14” of the TCM. If all the above are in good condition, substitute a known-good TCM and recheck.

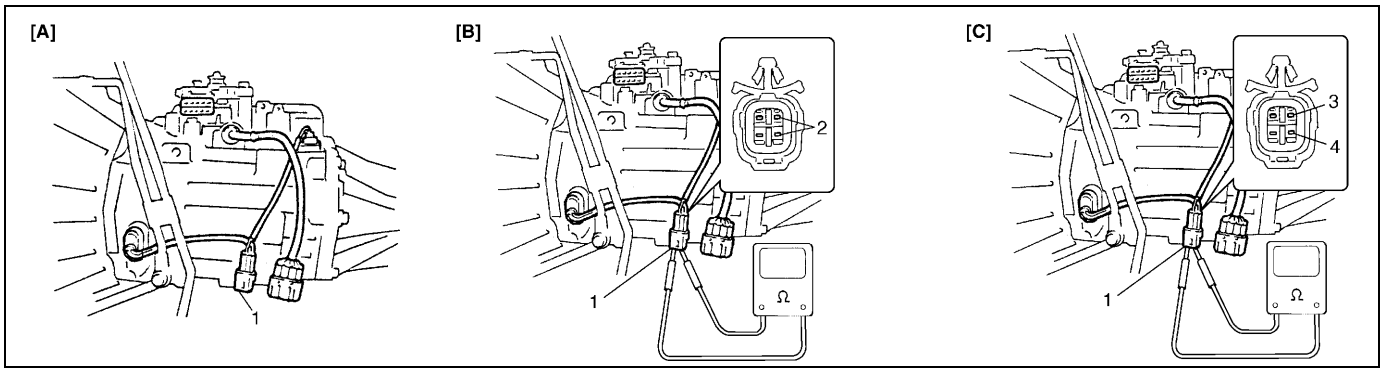

[A]: Fig. for Step 1/3	1. Output shaft speed sensor – input shaft speed sensor coupler	4. Terminal “4”
[B]: Fig. for Step 1	2. Output shaft speed sensor terminals	
[C]: Fig. for Step 3	3. Terminal “3”	

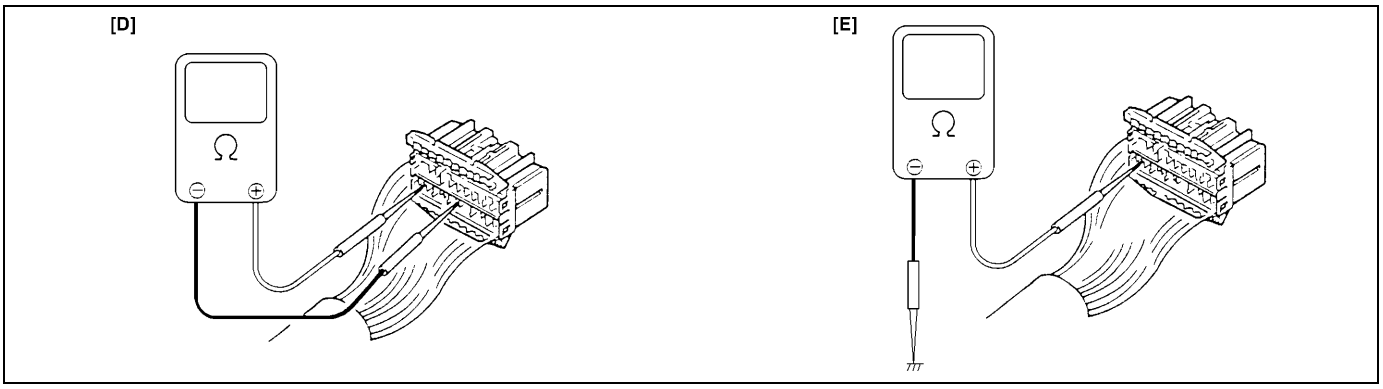

[D]:	Fig. for Step 2/5
[E]:	Fig. for Step 4

DTC P1700/DTC No.32/33 Throttle Position Signal Input Malfunction

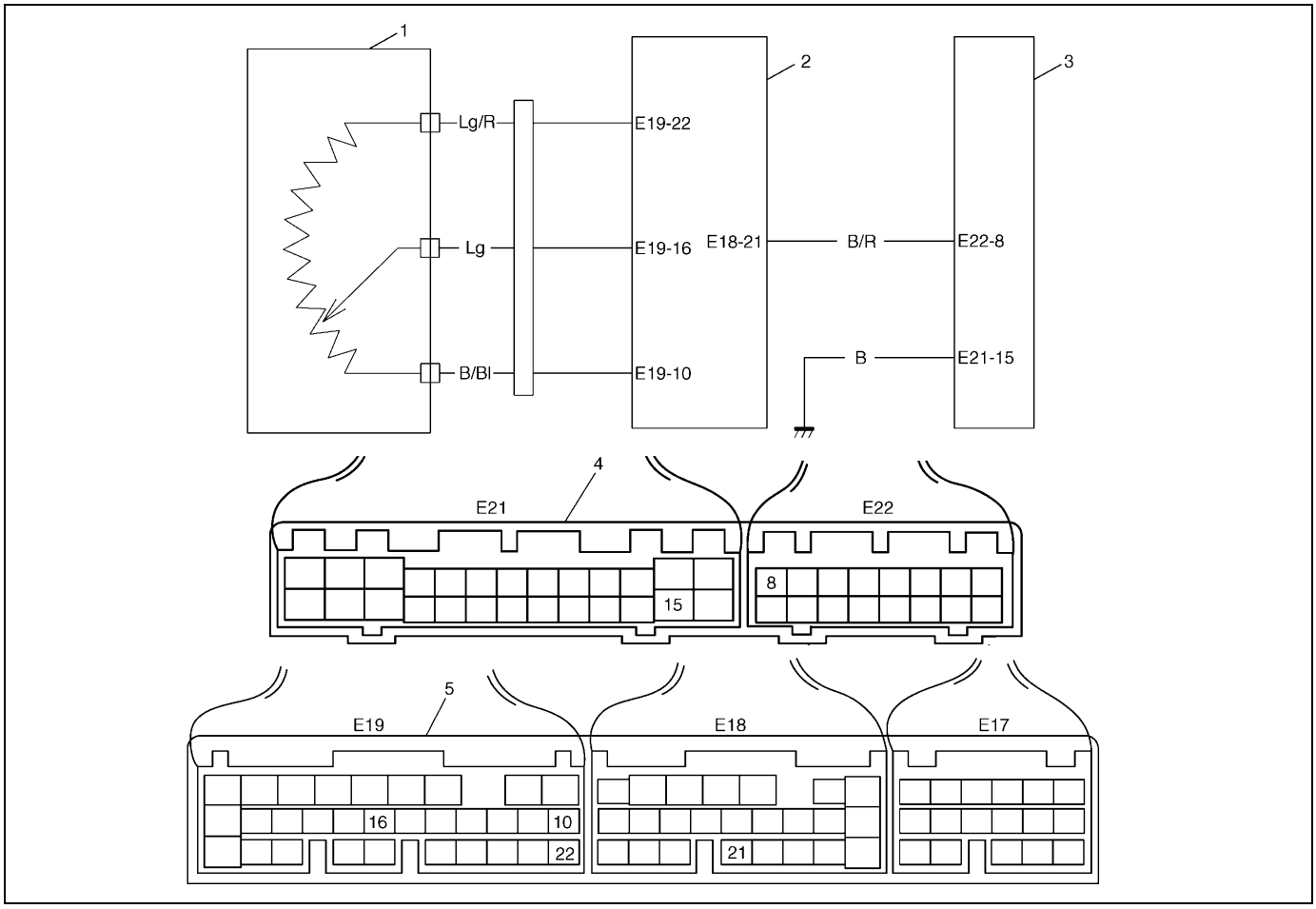

1. Throttle position (TP) sensor	4. TCM coupler (viewed from harness side)
2. ECM	5. Terminal arrangement of ECM coupler (viewed from harness side)
3. TCM	

DTC DETECTING CONDITION
NO or abnormal throttle opening signal is input.

Step	Action	Yes	No
1	Check DTC of “Engine Diagnosis” referring to Section 6. Is there DTC related to throttle position sensor detected?	Inspect and repair referring to DTC flow table of “Engine Diagnosis” in Section 6.	Go to Step 2.
2	Is DTC No.33?	Go to Step 4.	Go to Step 3.
3	Is DTC No.32?	Go to Step 5.	Go to Step 6. (When DTC is P1700.)
4	1) Turn ignition switch OFF and disconnect ECM couplers. 2) Turn ignition switch ON and check voltage between terminal “E18-21” of disconnected harness side ECM coupler and body ground. Is it 10 – 14 V?	Poor connection of terminal “E18-21” of ECM coupler. If connection is OK, substitute a known-good ECM and recheck.	“B/R” wire open or poor connection of terminal “E22-8” of TCM coupler. If wire and connection are OK, substitute a known-good TCM and recheck.

Step	Action	Yes	No
5	1) Turn ignition switch OFF and disconnect ECM couplers. 2) Turn ignition switch ON and check voltage between terminal “E18-21” of disconnected harness side ECM coupler and body ground. Is it 10 – 14 V?	Go to Step 7.	Substitute a known-good TCM and recheck.
6	1) Check for proper connection of terminal “E18-21” of ECM coupler. 2) If OK, turn ignition switch OFF and disconnect ECM couplers. 3) Turn ignition switch ON and check voltage between terminal “E18-21” of disconnected harness side ECM coupler and body ground. Is it 10 – 14 V?	Go to Step 7.	“B/R” wire open or poor connection of terminal “E22-8” of TCM coupler. If wire and connection are OK, substitute a known-good TCM and recheck.
7	1) Turn ignition switch OFF and disconnect TCM couplers. 2) Check resistance between terminal “E22-8” of disconnected harness side TCM coupler and body ground. Is it infinity?	Intermittent trouble or faulty ECM. Check for intermittent referring to “Intermittent and Poor Connection” in Section 0A. If no trouble found, substitute a known-good ECM and recheck.	“B/R” wire shorted to ground.

DTC P0705/DTC No.34 Transmission Range Sensor (Switch) Circuit Malfunction

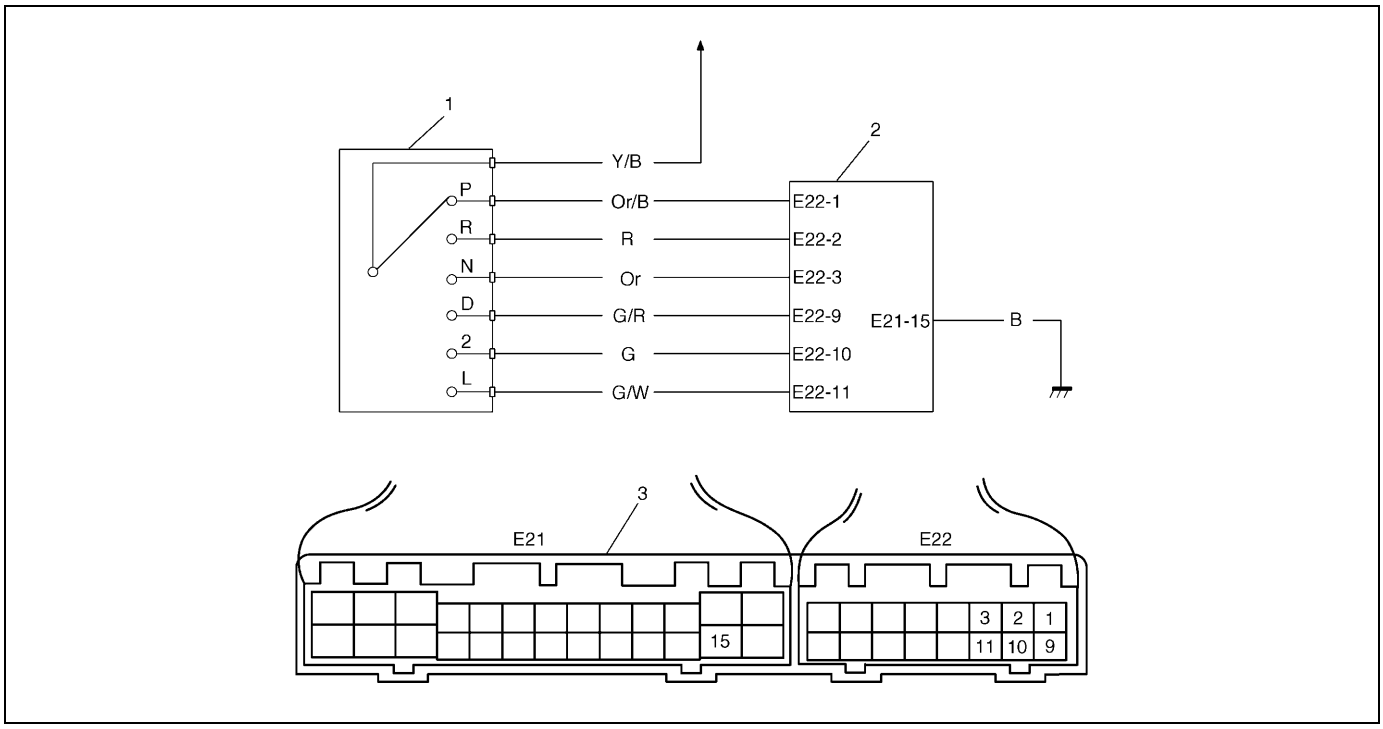

1. Transmission range sensor (switch)	3. Terminal arrangement of TCM coupler (viewed from harness side)
2. TCM	

DTC DETECTING CONDITION
No transmission range sensor signal is input or two or more transmission range sensor signals are input at the same time.

Step	Action	Yes	No
1	1) Turn ignition switch OFF, disconnect TCM coupler. 2) Turn ignition switch ON, check voltage between terminal “E22-1” and “E21-15” of disconnected harness side TCM coupler. Is it 10 – 14 V at “P” range and 0 V at the other range?	Go to Step 2.	Go to Step 7.
2	While ignition switch ON, check voltage between terminal “E22-2” and “E21-15” of disconnected harness side TCM coupler. Is it 10 – 14 V at “R” range and 0 V at the other range?	Go to Step 3.	Go to Step 7.
3	While ignition switch ON, check voltage between terminal “E22-3” and “E21-15” of disconnected harness side TCM coupler. Is it 10 – 14 V at “N” range and 0 V at the other range?	Go to Step 4.	Go to Step 7.

Step	Action	Yes	No
4	While ignition switch ON, check voltage between terminal “E22-9” and “E21-15” of disconnected harness side TCM coupler. Is it 10 – 14 V at “D” range and 0 V at the other range?	Go to Step 5.	Go to Step 7.
5	While ignition switch ON, check voltage between terminal “E22-10” and “E21-15” of disconnected harness side TCM coupler. Is it 10 – 14 V at “2” range and 0 V at the other range?	Go to Step 6.	Go to Step 7.
6	While ignition switch ON, check voltage between terminal “E22-11” and “E21-15” of disconnected harness side TCM coupler. Is it 10 – 14 V at “L” range and 0 V at the other range?	Intermittent trouble or faulty TCM. Check for intermittent trouble referring to “Intermittent and Poor Connection” in Section 0B.	Go to Step 7.
7	Check transmission range sensor referring in this section. Is it OK? See figure.	Transmission range sensor wire shorted. If wire harnesses are OK, substitute a known-good TCM and recheck.	Replace transmission range sensor.

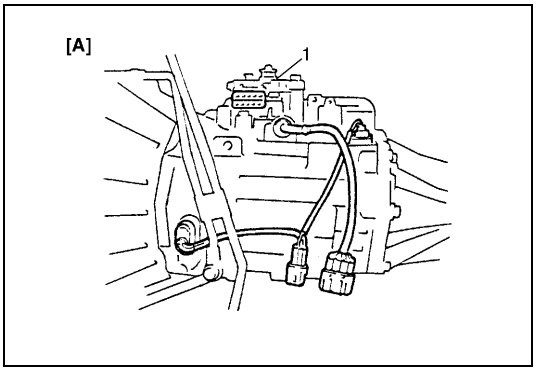

[A]:	Fig. for Step 7
1.	Transmission range sensor

DTC P0725/DTC No.35 Engine Speed Input Circuit

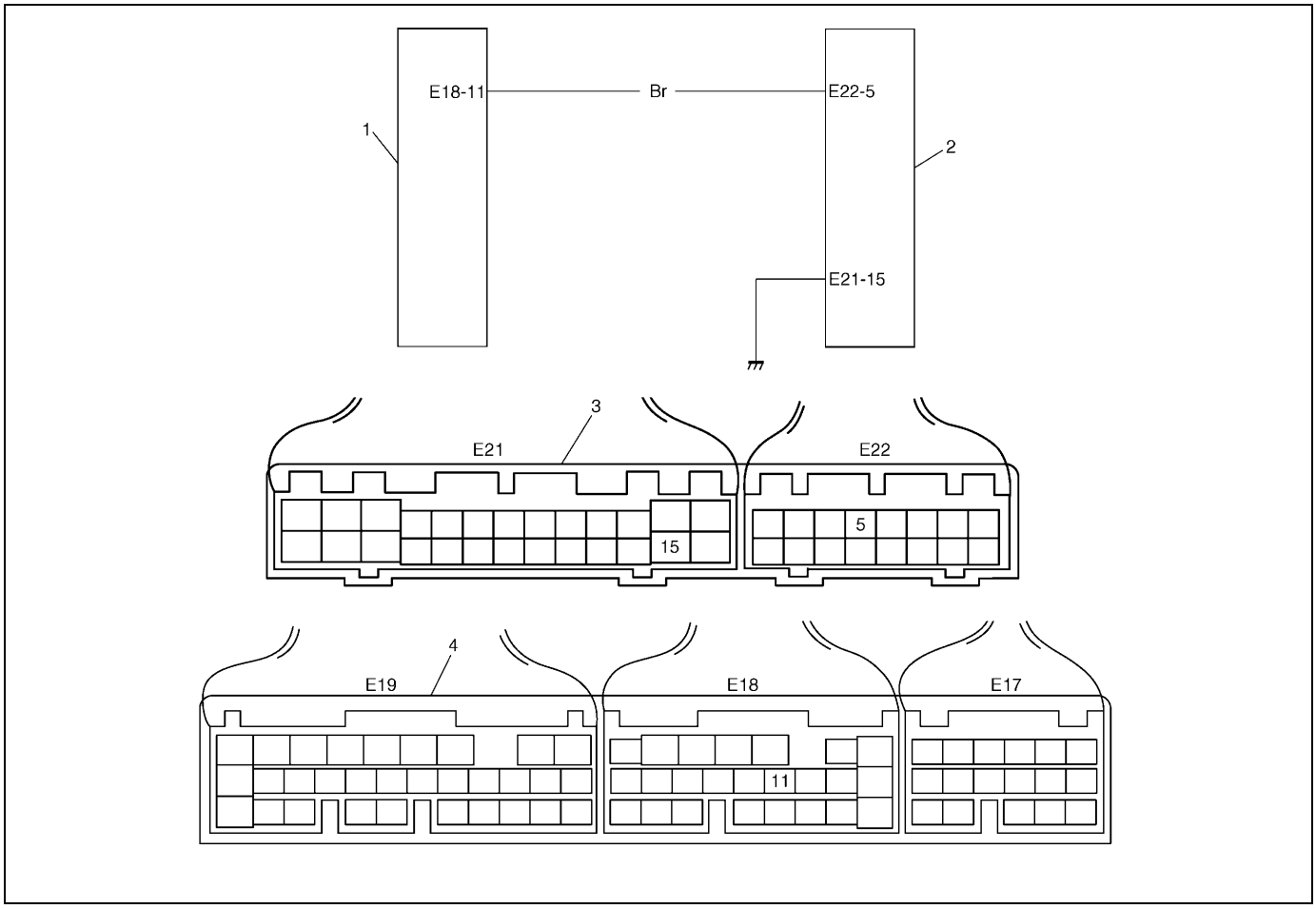

1. ECM	3. Terminal arrangement of TCM coupler (viewed from harness side)
2. TCM	4. Terminal arrangement of ECM coupler (viewed from harness side)

DTC DETECTING CONDITION
Input engine rev. signal voltage is too low or too high.

Step	Action	Yes	No
1	Check DTC of “Engine Diagnosis” referring to Section 6. Is there DTC related to engine speed sensor?	Inspect and repair referring to DTC flow table of “Engine Diagnosis” in Section 6.	Go to Step 2.
2	1) Turn ignition switch OFF and disconnect ECM or TCM couplers. 2) Measure resistance between terminal “E18-11” and “E22-5” of disconnected harness side coupler. Is it about 0 Ω?	Go to Step 3.	“Br” wire open.
3	Measure resistance between terminal “E22-5” of disconnected harness side coupler and body ground. See figure. Is it infinity?	Go to Step 4.	“Br” wire shorted to ground.

Step	Action	Yes	No
4	1) Turn ignition switch OFF and connect ECM couplers. 2) Turn ignition switch ON and measure voltage between terminal “E22-5” of disconnected harness side TCM coupler and body ground. Is it 10 – 14 V?	Intermittent trouble or faulty ECM or TCM. Check for intermittent referring to “Intermittent and Poor Connection” in Section 0A. If no trouble found, substitute a known-good ECM or TCM and recheck.	“Br” wire is shorted to power circuit or faulty ECM. If “Br” wire is OK, substitute a known-good ECM and recheck.

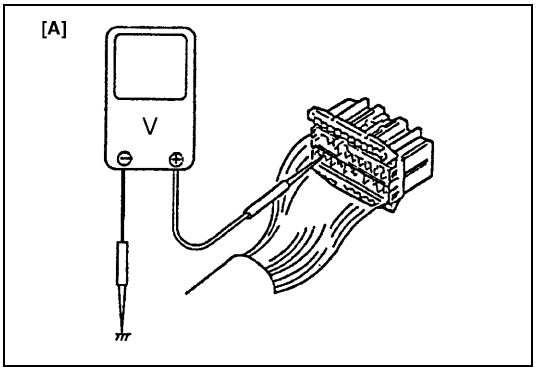

[A]: Fig. for Step 3

DTC P0710/DTC No.36/38 Transmission Fluid Temperature Sensor Circuit

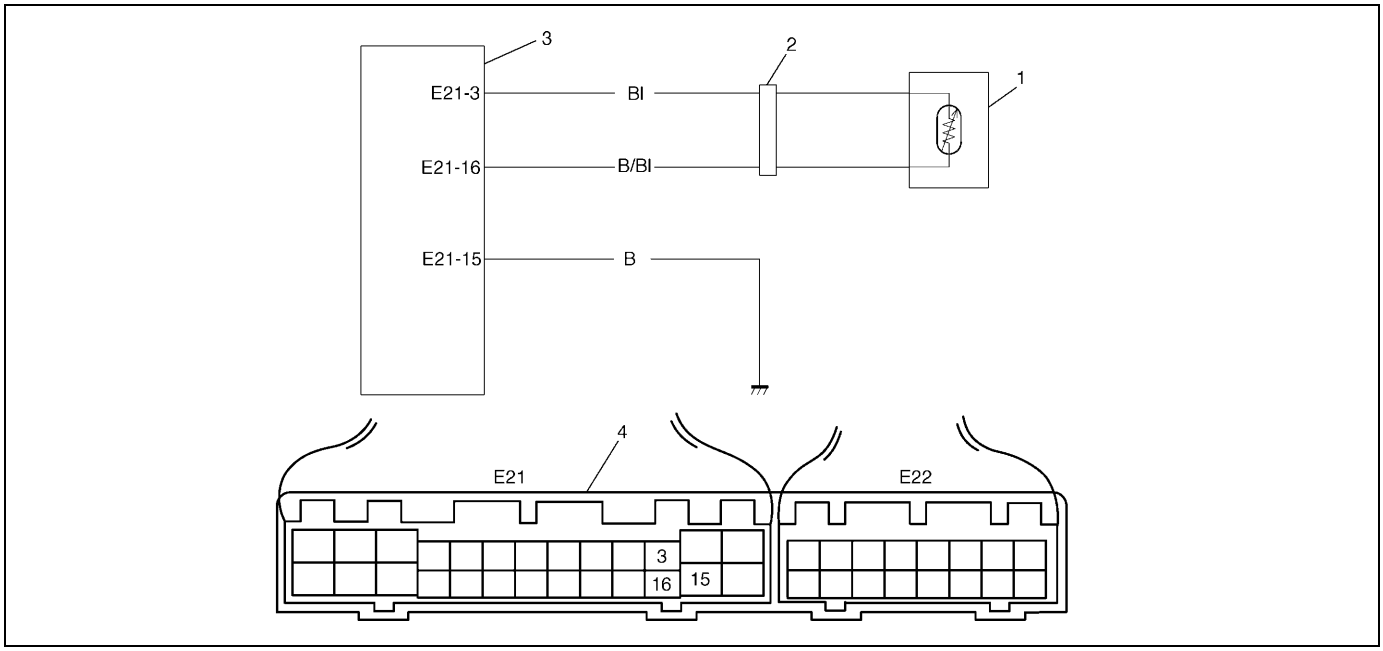

1. Transmission fluid temperature sensor	3. TCM
2. Coupler	4. Terminal arrangement of TCM coupler (viewed from harness side)

DTC DETECTING CONDITION

- Transmission fluid temperature signal input voltage is too low.
- Transmission fluid temperature signal input voltage does not go down although standard value of engine rev. signal is input.

Step	Action	Yes	No
1	1) Turn ignition switch OFF and disconnect sensor wire harness coupler. 2) Measure resistance between “Bl” wire and “B/Bl” wire terminal of sensor harness side coupler. Is it infinity or 0 Ω?	Faulty transmission temperature sensor. Replace transmission temperature sensor.	Go to Step 2.
2	Is DTC No.36?	Go to Step 4.	Go to Step 3.
3	Is DTC No.38?	Go to Step 5.	Go to Step 6. (When DTC is P0710.)
4	1) Turn ignition switch OFF and connect sensor wire harness coupler. 2) Disconnect TCM couplers. 3) Measure the resistance between terminal “E21-3” and “E21-16” of disconnected harness side coupler. Is it about 0 Ω?	“Bl” and “B/Bl” wire shorted each other.	Substitute a known-good TCM and recheck.
5	1) Turn ignition switch OFF and connect sensor wire harness coupler. 2) Disconnect TCM couplers. 3) Measure the resistance between terminal “E21-3” and “E21-16” of disconnected harness side coupler. Is it infinity?	“Bl” or “B/Bl” wire open or poor connection of solenoid wire harness coupler.	Go to Step 7.

Step	Action	Yes	No
6	1) Turn ignition switch OFF and connect sensor wire harness coupler. 2) Disconnect TCM couplers. 3) Measure the resistance between terminal “E21-3” and “E21-16” of disconnected harness side coupler. Is it about 0 Ω or infinity?	“Bl” or “B/Bl” wire open, shorted each other or poor connection of solenoid wire harness coupler.	Go to Step 7.
7	1) Turn ignition switch OFF and connect TCM couplers. 2) Disconnect solenoid wire harness coupler. 3) Turn ignition switch ON then measure voltage between “Bl” wire terminal of disconnected harness side coupler and engine ground. See figure. Is it 4 – 6 V?	Intermittent trouble or faulty TCM. Check for intermittent referring to “Intermittent and Poor Connection” in Section 0A. If no trouble found, substitute a known-good TCM and recheck.	“Bl” wire shorted to power circuit or poor connection of terminal “E21-3”. If wire and connection are OK, substitute a known-good TCM.

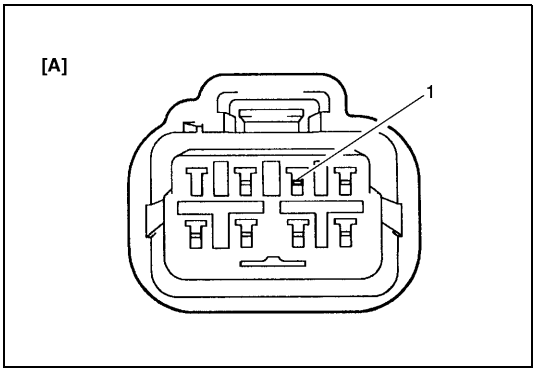

[A]:	Fig. for Step 7
1.	“Bl” wire terminal

DTC P1709/DTC No.51 Engine Coolant Temperature Signal Circuit

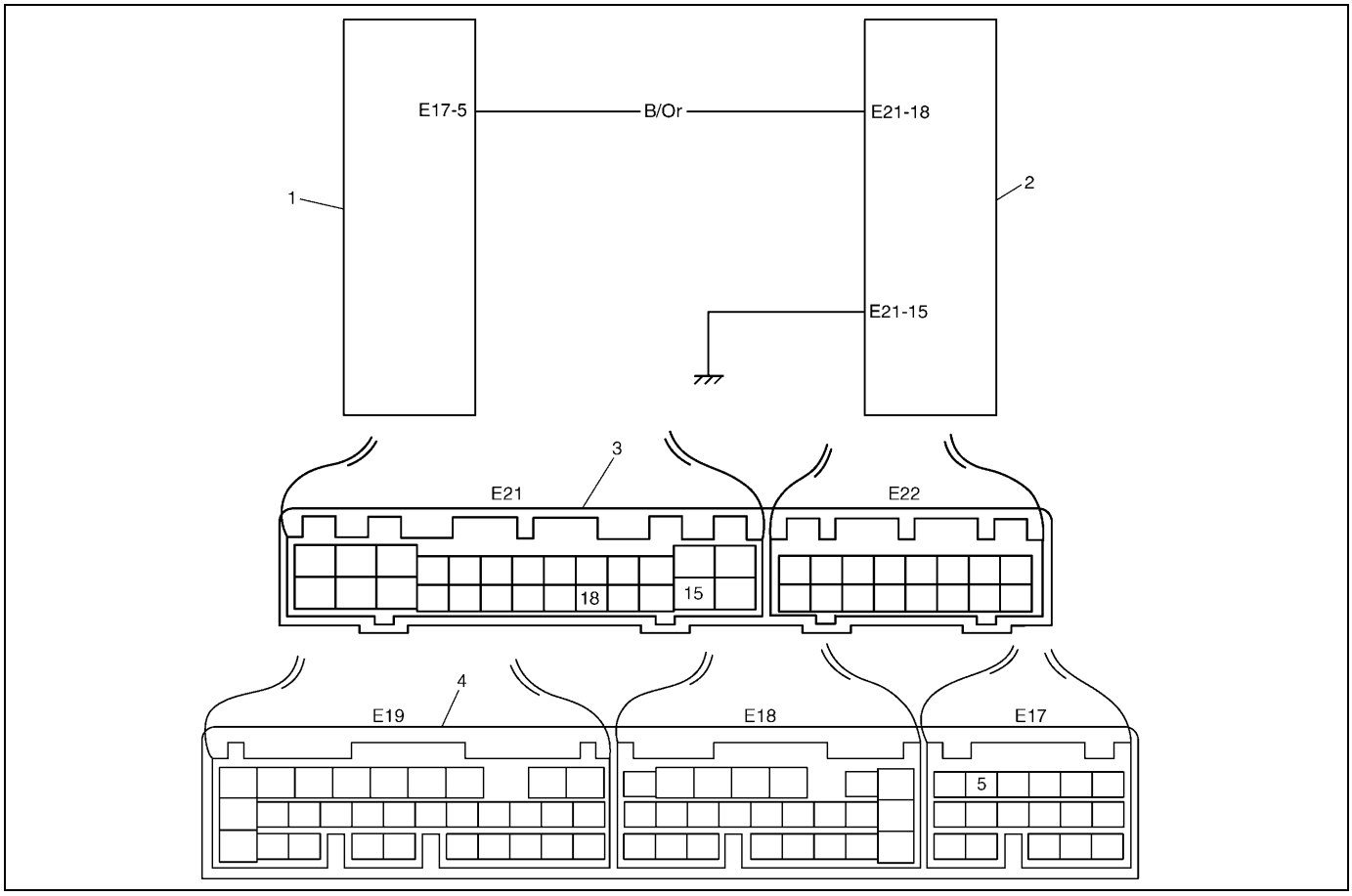

1. ECM	4. Terminal arrangement of TCM coupler (viewed from harness side)
2. TCM	5. Terminal arrangement of ECM coupler (viewed from harness side)

DTC DETECTING CONDITION
• O/D off signal from ECM require O/D off although A/T fluid temperature is normal operating temperature and engine rev. is standard.

Step	Action	Yes	No
1	Check DTC of “Engine Diagnosis” referring to Section 6. Is any DTC detected?	Inspect and repair referring to DTC flow table of “Engine Diagnosis” in Section 6.	Go to Step 2.
2	1) Turn ignition switch OFF and disconnect TCM and ECM couplers. 2) Measure resistance between terminal “E21-18” of disconnected harness side TCM coupler and body ground. Is it infinity?	Go to Step 3.	“B/Or” wire shorted to ground.
3	1) Turn ignition switch OFF and connect TCM couplers. 2) Turn ignition switch ON and check voltage between terminal “E21-18” and body ground. Is it 0 V?	Substitute a known-good TCM and recheck.	Substitute a know-good ECM and recheck.

DTC P0702/P1702/DTC No.52 Transmission Control System Electrical or Internal Malfunction of TCM

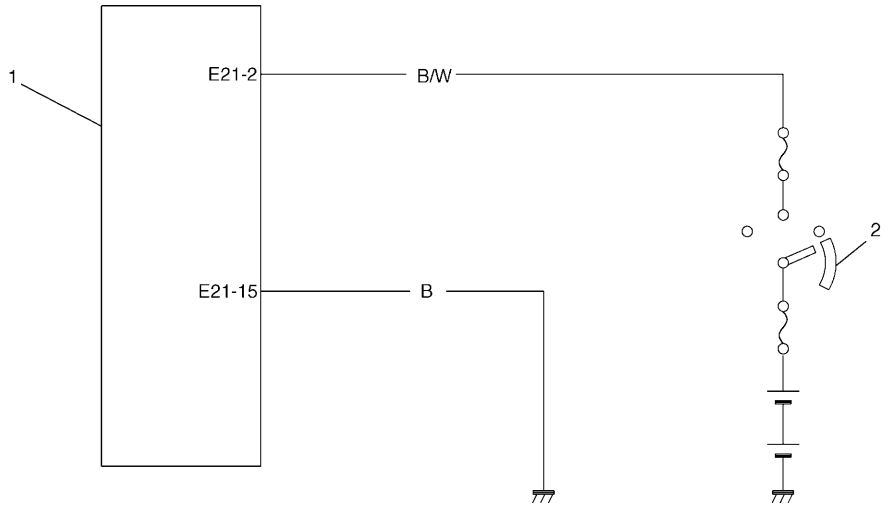

1.	TCM
2.	Ignition switch

DTC DETECTING CONDITION
• Relay output voltage is too high although TCM orders the relay to turn OFF or relay output voltage is too low although TCM orders the relay to turn on. • Calculation of current data stored in TCM is not correct comparing with pre-stored checking data in TCM.

Step	Action	Yes	No
1	1) Turn ignition switch ON. 2) Erase all DTCs referring to “DTC Clearance” in this section. 3) Turn ignition switch OFF. 4) Turn ignition switch ON once again and check for any DTC. Is it DTC P1702/DTC No.52 or DTC P0702/DTC No.52?	Replace TCM.	Could be a temporary malfunction of the TCM.

DTC P1887/DTC No.57 Vehicle Speed Sensor (VSS) Signal Circuit

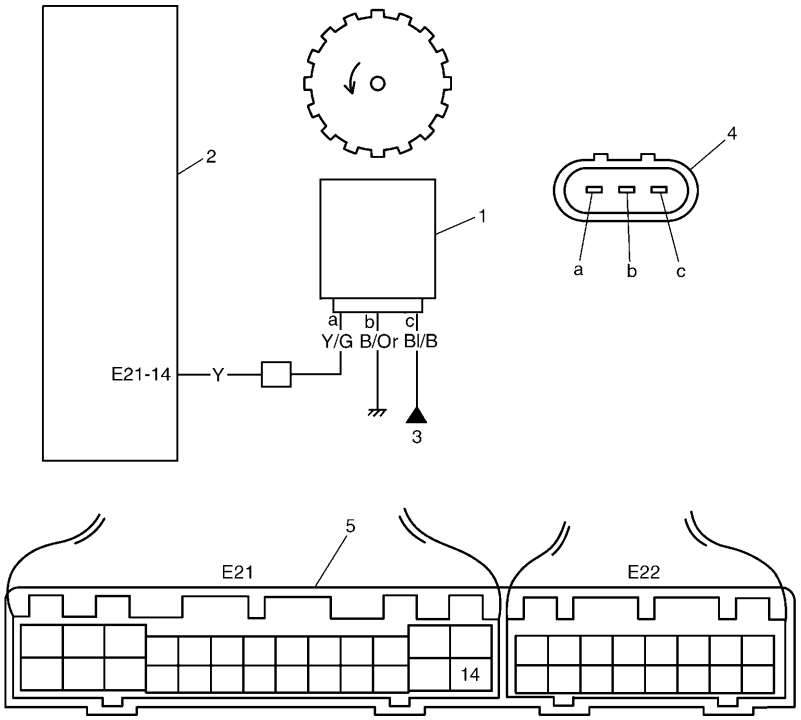

1. VSS	3. Power supply from main relay	5. Terminal arrangement of TCM coupler (Viewed from harness side)
2. TCM	4. VSS terminal	

DTC DETECTING CONDITION
Difference in detected vehicle speed between output shaft speed sensor and VSS is too wide.

Step	Action	Yes	No
1	Confirm if DTC P0720/DTC No.31 is detected together. Is DTC P0720/DTC No.31 detected?	Inspect and repair referring to DTC flow table of “Output Shaft Speed Sensor” in this section.	Go to Step 2.
2	1) Turn ignition switch OFF and disconnect VSS coupler. 2) Turn ignition switch ON and measure voltage between “Bl/B” wire terminal and “B/Or” wire terminal of disconnected harness side coupler. Is it 10 – 14V?	Go to Step 3.	“Bl/B” or “B/Or” wire open or shorted.
3	Measure voltage between “Y/G” wire terminal of disconnected harness side coupler and engine ground. Is it 3 V or more?	Go to Step 4.	“Y/G” or “Y” wire open or shorted to ground.

Step	Action	Yes	No
4	1) Remove VSS referring to Section 7D. 2) Check VSS rotor referring to Section 7D. Is it in good condition?	Intermittent trouble or faulty TCM. Check for intermittent referring to “Intermittent and Poor Connection” in Section 0A. If no trouble found, substitute a known-good TCM and recheck.	Replace VSS rotor.

Scan Tool Data

As the data values given below are standard values estimated on the basis of values obtained from the normally operating vehicles by using a scan tool, use them as reference values. Even when the vehicle is in good condition, there may be cases where the checked value does not fall within each specified data range. Therefore, judgement as normal as abnormal should not be made by checking with those data alone.
Also, condition in the below table that can be cases where the automatic transmission or actuator is not operating in the condition as indicated by the scan tool.

NOTE:

The following scan tool data related to automatic transmission can be checked only by communicating with TCM.

SCAN TOOL DATA	VEHICLE CONDITION		NORMAL CONDITION/ REFERENCE VALUES
GEAR POSITION	Ignition switch ON and vehicle at stop.	Selector lever is in “P” position.	P or N
		Selector lever is in “R” position.	R
		Selector lever is in “N” position.	P or N
		Selector lever is in “D” position.	1
		Selector lever is in “2” position.	1
		Selector lever is in “L” position.	1
REQUIRED GEAR	Ignition switch ON and vehicle at stop.	Selector lever is in “P” position.	P or N
		Selector lever is in “R” position.	R
		Selector lever is in “N” position.	P or N
		Selector lever is in “D” position.	1
		Selector lever is in “2” position.	1
		Selector lever is in “L” position.	1
INPUT SHAFT REV	Ignition switch ON and engine stop.		0 RPM
	At 60 km/h (37.5 mile/h) constant speed, T/F “2H” range, O/D off switch ON, 20% or less throttle opening and 3rd gear (“D” range).		2650 RPM (displayed in increments of 50 rpm)
OUTPUT SHAFT REV	At vehicle stop.		0 RPM
	At 60 km/h (37.5 mile/h) constant speed, T/F “2H” range, O/D off switch ON, 20% or less throttle opening and 3rd gear (“D” range).		2650 RPM (displayed in increments of 50 rpm)
BATTERY VOLT.	Ignition switch ON and engine stop.		Battery voltage is displayed 8 – 16 V

SCAN TOOL DATA	VEHICLE CONDITION		NORMAL CONDITION/ REFERENCE VALUES
ATF TEMP.	After driving at 60 km/h (37.5 mile/h) for 15 minutes or more, and A/T fluid temperature around sensor reaches 70 – 80 °C (158 – 176 °F).		70 – 80 °C, 158 – 176 °F
SHIFT SOL #1 DUTY	Ignition switch ON, vehicle is at stop and selector lever is in “P” position.		0 %
	While on shifting from 1st gear to 2nd gear.		0 – 100 %
SHIFT SOL #2 DUTY	Ignition switch ON, vehicle is at stop and selector lever is in “P” position.		100 %
	While on shifting from 1st gear to 2nd gear.		0 – 100 %
SHIFT SOL #3 DUTY	Ignition switch ON, vehicle is at stop and selector lever is in “P” position.		0 %
	While on shifting from 2nd gear to 3rd gear.		0 – 100 %
SHIFT SOL #4 DUTY	Ignition switch ON, vehicle is at stop and selector lever is in “P” position.		0 %
	While on shifting from 3rd gear to 4th gear.		0 – 100 %
TCC SOL DUTY	At 5 km/h (3 mile/h) constant speed, O/D off switch ON, closed throttle and 1st gear.		0 %
	At 60 km/h (37.5 mile/h) constant speed, T/F “2H” range, O/D off switch OFF, 5% to 16% throttle opening and 4th gear (“D” range).		100 %
ENGINE SPEED	At engine idle speed.		Engine idle speed is displayed
VEHICLE SPEED	At vehicle stop.		0 km/h, 0 MPH
O/D OFF SWITCH (CON)	Ignition switch ON and normal engine coolant temperature.	O/D off switch OFF.	OFF
		O/D off switch ON.	ON
O/D OFF SWITCH (MON)	Ignition switch ON.	O/D off switch OFF.	OFF
		O/D off switch ON.	ON
TRANS. RANGE	Ignition switch ON.	Selector lever is in “P” position.	P
		Selector lever is in “R” position.	R
		Selector lever is in “N” position.	N
		Selector lever is in “D” position.	D
		Selector lever is in “2” position.	2
		Selector lever is in “L” position.	L
D RANGE SIGNAL	Ignition switch ON.	Selector lever is in “P” position.	OFF
		Selector lever is in “R” position.	ON
		Selector lever is in “N” position.	OFF
		Selector lever is in “D” position.	ON
		Selector lever is in “2” position.	ON
		Selector lever is in “L” position.	ON
THROTTLE POSITION	Ignition switch ON.	Accelerator pedal is released.	0 %
		Accelerator pedal is depressed.	0 – 100 % (Varies depending on depressed value)
COOLANT TEMP.	Engine coolant temperature is 60 °C (140 °F) or more and engine running.		HIGH
	Engine coolant temperature is below 60 °C (140 °F) and engine running.		LOW

SCAN TOOL DATA	VEHICLE CONDITION		NORMAL CONDITION/ REFERENCE VALUES
A/C SWITCH	Ignition switch ON and air conditioner switch OFF.		OFF
BRAKE SWITCH	Ignition switch ON.	Brake pedal is depressed.	ON
		Brake pedal is released.	OFF

SCAN TOOL DATA DEFINITIONS:

GEAR POSITION

Current gear position computed by throttle position coming from ECM and vehicle speed.

REQUIRED GEAR

Gear position to which TCM is going to shift according to calculation by throttle position coming from ECM and vehicle speed.

INPUT SHAFT REVOLUTION (RPM)

Input shaft revolution computed by reference pulses coming from input shaft speed sensor on transmission case.

OUTPUT SHAFT REVOLUTION (RPM)

Output shaft revolution computed by reference pulses coming from output shaft speed sensor on transmission case.

BATTERY VOLTAGE (V)

Battery voltage read by TCM as analog input signal by TCM.

ATF TEMPERATURE (°C, °F)

ATF temperature decided by signal from transmission fluid temperature sensor installed on valve body.

SHIFT SOLENOID #1 DUTY

Electricity duty ratio of duty pulse signal applied to shift solenoid valve-A (No.1) by TCM.

SHIFT SOLENOID #2 DUTY

Electricity duty ratio of duty pulse signal applied to shift solenoid valve-B (No.2) by TCM.

SHIFT SOLENOID #3 DUTY

Electricity duty ratio of duty pulse signal applied to shift solenoid valve-C (No.3) by TCM.

SHIFT SOLENOID #4 DUTY

Electricity duty ratio of duty pulse signal applied to shift solenoid valve-D (No.4) by TCM.

TCC SOLENOID DUTY

Electricity duty ratio of duty pulse signal applied to TCC solenoid valve by TCM.

ENGINE SPEED (RPM)

Engine speed computed by reference pulse from crankshaft position sensor.

VEHICLE SPEED (KPH/MPH)

Vehicle speed computed by reference pulse signals coming from vehicle speed sensor on transfer case.

O/D OFF SWITCH CONTROL
Condition which TCM controls automatic transmission if shift to O/D is permitted or not.
ON : Shift to O/D is permitted.
OFF : Shift to O/D is not permitted.

O/D OFF SWITCH MONITOR
Input signal from O/D off switch on selector knob.
ON : O/D off switch ON.
OFF : O/D off switch OFF.

TRANSMISSION RANGE
Transmission range detected by signal fed from transmission range sensor.

D RANGE SIGNAL
ON : Signal which TCM require ECM to increase idle speed.
OFF : Signal which TCM does not require ECM to increase idle speed.

THROTTLE POSITION (%)
Throttle opening ratio computed by duty pulse signal from ECM.

COOLANT TEMPERATURE
Signal from ECM whether engine coolant temperature is more than 50 °C (122 °F) or not.

A/C SIGNAL
ON : Signal which inform that air conditioner compressor is turned ON.
OFF : Signal which inform that air conditioner compressor is not turned ON.

BRAKE SWITCH
Input signal from brake light switch on pedal bracket.
ON : Brake pedal depressed.
OFF : Brake pedal released.

Inspection of TCM and Its Circuits

TCM and its circuits can be checked at TCM wiring couplers by measuring voltage and resistance.

CAUTION:

TCM cannot be checked by itself, it is strictly prohibited to connect voltmeter or ohmmeter to TCM with coupler disconnected from it.

VOLTAGE CHECK

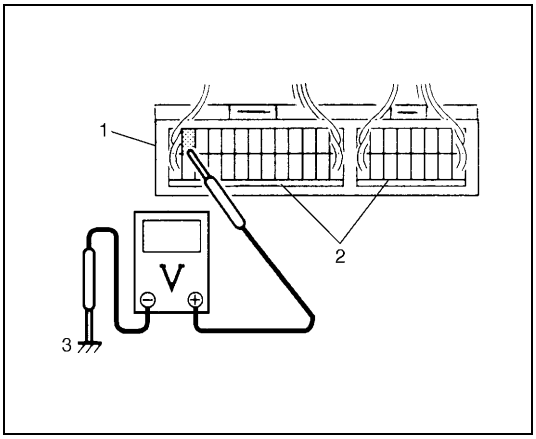

1) Remove TCM (1) from vehicle referring to “Transmission Control Module Removal” in this section.
2) Connect TCM couplers (2) to TCM.
3) Check voltage at each terminal of couplers connected.

NOTE:

As each terminal voltage is affected by the battery voltage, confirm that it is 11 V or more when ignition switch is ON.

3. Body ground

Terminal arrangement of TCM coupler (Viewed from harness side)

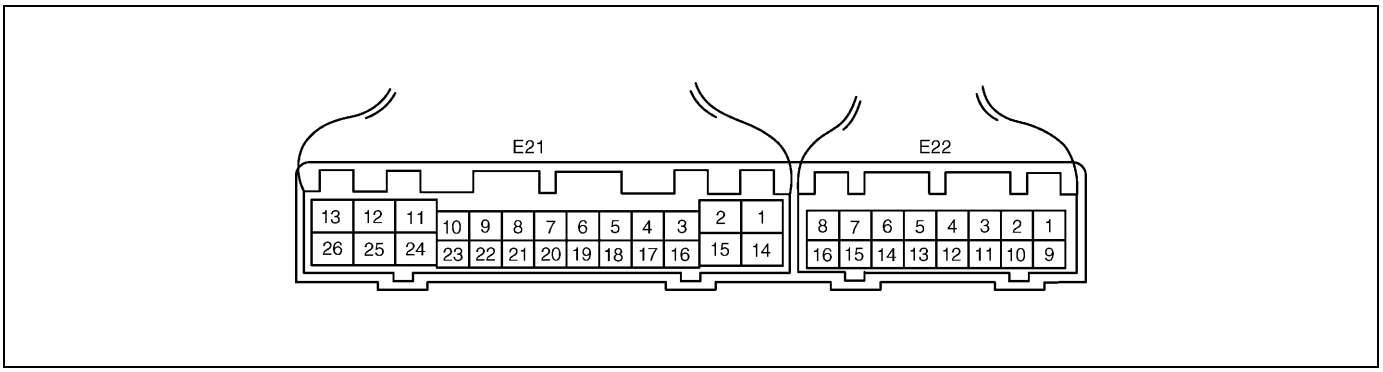

TERMINAL		CIRCUIT	STANDARD VOLTAGE	CONDITION
E21	2	IG power source	10 – 14 V	IG switch ON
	3	Transmission fluid temperature sensor	0.2 – 0.4 V	IG switch ON, fluid temperature 80 °C (176 °F)
	4	Brake switch	10 – 14 V	IG switch ON, brake pedal depressed
	5	A/C compressor	0 – 2 V	A/C OFF
			10 – 14 V	A/C ON
	8	D-range idle up signal	10 – 14 V	Select lever at “P” or “N” range
			0 – 1 V	Select lever other than “P” and “N” range
	14	Vehicle speed sensor	–	–
	15	Ground	0 – 1 V	IG switch ON
	16	Transmission fluid temperature sensor ground	0 – 1 V	IG switch ON
	17	O/D off switch	0 – 1 V	IG switch ON, O/D off switch ON
			10 – 14 V	IG switch ON, O/D off switch OFF
	18	Engine coolant temperature signal	10 – 14 V	IG switch ON, normal operating temperature of engine fluid
	20	A/T failure serial data	0 – 1 V	IG switch ON
	21	O/D OFF lamp	10 – 14 V	IG switch ON, O/D off switch OFF
			0 – 1 V	IG switch ON, O/D off switch ON
	22	Lock-up solenoid	0 – 1 V	IG switch ON, select lever at “P” range
	23	Shift solenoid-D (No.4)	0 – 1 V	IG switch ON, select lever at “P” range
	24	Shift solenoid-C (No.3)	0 – 1 V	IG switch ON, select lever at “P” range
			10 – 14 V	IG switch ON, select lever at “L” range
	25	Shift solenoid-B (No.2)	0 – 1 V	IG switch ON, select lever at “R” range
			10 – 14 V	IG switch ON, select lever at “P” range
	26	Shift solenoid-A (No.1)	0 – 1 V	IG switch ON, select lever at “P” range
E22	1	Transmission range sensor – “P” range	10 – 14 V	IG switch ON, select lever at “P” range
			0 – 1 V	IG switch ON, select lever other than “P” range
	2	Transmission range sensor – “R” range	10 – 14 V	IG switch ON, select lever at “R” range
			0 – 1 V	IG switch ON, select lever other than “R” range
	3	Transmission range sensor – “N” range	10 – 14 V	IG switch ON, select lever at “N” range
			0 – 1 V	IG switch ON, select lever other than “N” range
	4	Diagnosis switch	10 – 14 V	IG switch ON, diagnosis switch terminal not grounded
	5	Engine speed signal	0 – 1 V	IG switch ON, leaving engine OFF
	6	Output shaft speed sensor (+)	–	–
	7	Input shaft speed sensor (+)	–	–
	8	Throttle opening signal	–	–
	9	Transmission range sensor – “D” range	10 – 14 V	IG switch ON, select lever at “D” range
			0 – 1 V	IG switch ON, select lever other than “D” range
	10	Transmission range sensor – “2” range	10 – 14 V	IG switch ON, select lever at “2” range
			0 – 1 V	IG switch ON, select lever other than “2” range
	11	Transmission range sensor – “L” range	10 – 14 V	IG switch ON, select lever at “L” range
			0 – 1 V	IG switch ON, select lever other than “L” range
	12	Serial data link (SUZUKI scan tool)	10 – 14 V	IG switch ON
	13	Output shaft speed sensor shield	–	–
	14	Output shaft speed sensor (–)	–	–
	15	Input shaft speed sensor (–)	–	–

On-Vehicle Service

Maintenance Service

Fluid level check

LEVEL CHECK AT NORMAL OPERATING TEMPERATURE

1) Stop vehicle and place it level.
2) Apply parking brake and place chocks against wheels.
3) With selector at P position, start engine.
4) Warm up engine till fluid temperature reaches normal operating temperature (70 – 80 °C/158 – 176 °F). As a guide to check fluid temperature, warm up engine to normal operating temperature.

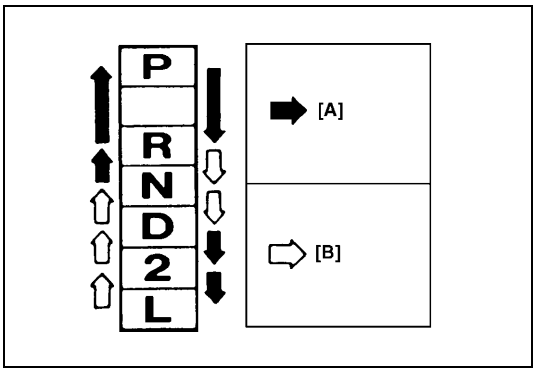

5) Keep engine idling and shift selector slowly to L and back to P position.
6) With engine idling, pull out dipstick, wipe it off with a clean cloth and put it back into place.

[A] :	Shift the selector lever with its button pushed in.
[B] :	Shift the selector lever without pushing its button.

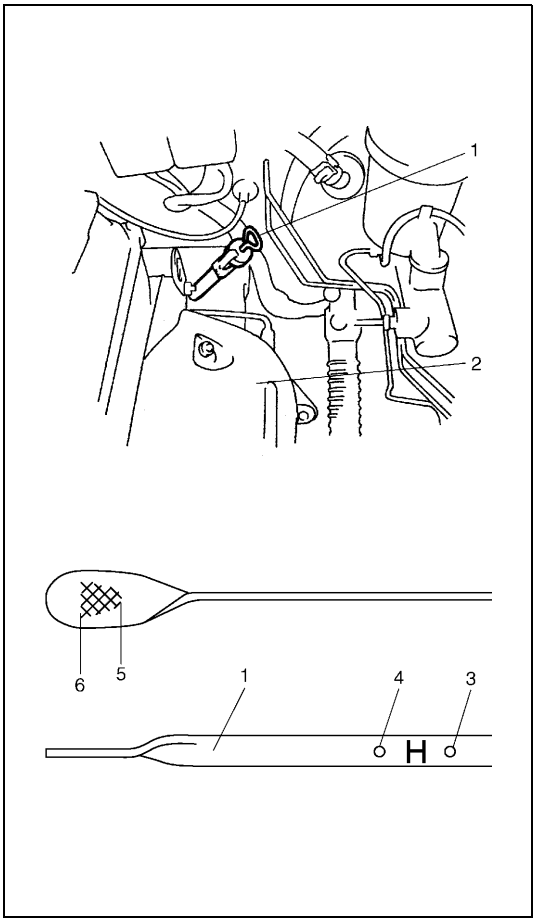

7) Pull out dipstick (1) again and check fluid level indicated on it. Fluid level should be between FULL HOT and LOW HOT. If it is below LOW HOT, add an equivalent of DEXRON®-IIE or DEXRON®-III, up to FULL HOT.

Automatic transaxle fluid

An equivalent of DEXRON®-III or DEXRON®-IIE

NOTE:

- **DO NOT RACE ENGINE while checking fluid level, even after the engine start.**
- **DO NOT OVERFILL. Overfilling can cause foaming and loss of fluid through breather. Then slippage and transmission failure can result.**
- **Bringing the level from LOW HOT to FULL HOT requires 0.13 liters (0.27/0.23 US/Imp. pt).**
- **If vehicle was driven under high load such as pulling a trailer, fluid level should be checked about half an hour after it is stopped.**

2.	Exhaust manifold cover
3.	“FULL HOT” mark
4.	“LOW HOT” mark
5.	“FULL COLD” line
6.	“LOW COLD” line

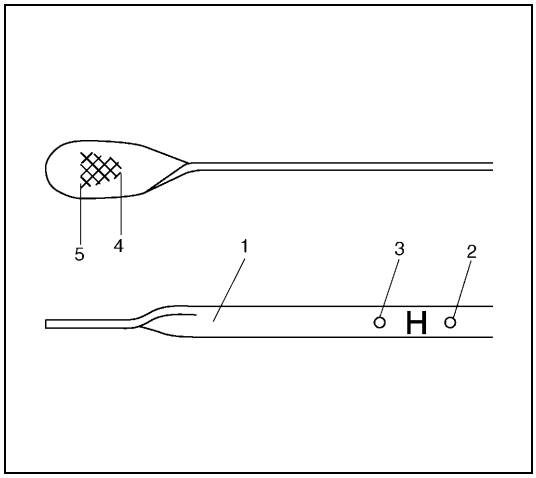

LEVEL CHECK AT ROOM TEMPERATURE

The fluid level check at room temperature (20 – 30 °C/68 – 86 °F) performed after repair or fluid change before test driving is just preparation for level check of normal operating temperature. The checking procedure itself is the same as that described previously. If the fluid level is between FULL COLD and LOW COLD, proceed to test drive. And when the fluid temperature has reached the normal operating temperature, check fluid level again and adjust it as necessary.

1. Dipstick	4. “FULL COLD” line
2. “FULL HOT” mark	5. “LOW COLD” line
3. “LOW HOT” mark	

Fluid change

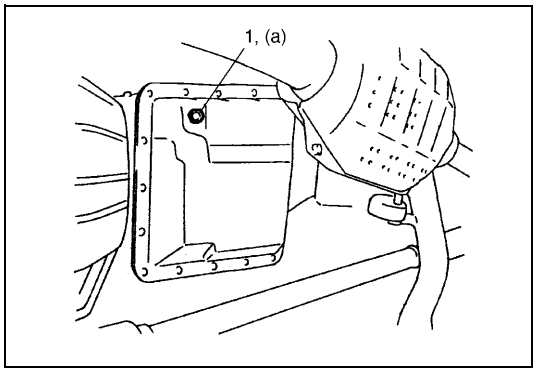

1) Lift up vehicle.
2) When engine has cooled down, remove drain plug (1) from oil pan and drain A/T fluid.
3) Install drain plug.

Tightening torque
A/T fluid drain plug
(a) : 22 N·m (2.2 kg-m, 16.0 lb-ft)

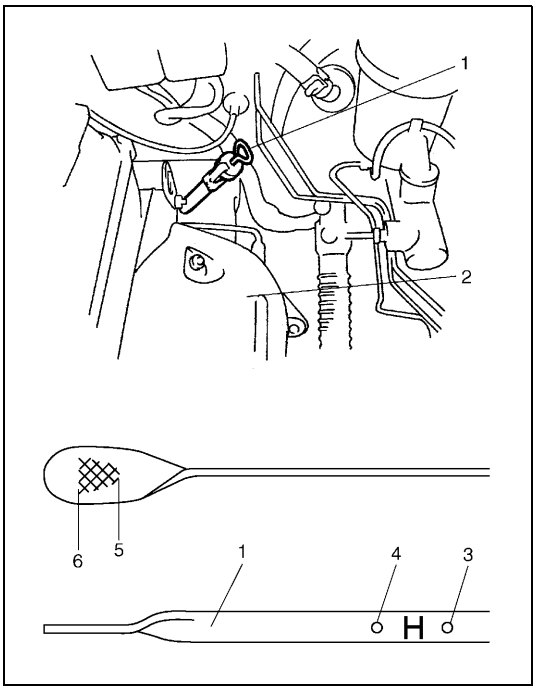

4) Lower vehicle and fill proper amount of an equivalent of DEXRON®-IIE or DEXRON®-III.
5) Check fluid level according to procedure described under LEVEL CHECK AT NORMAL OPERATING TEMPERATURE.

Automatic transaxle fluid

An equivalent of DEXRON®-III or DEXRON®-IIE

Automatic transaxle fluid capacity
When draining from drain plug hole :
1.0 liters (2.11/1.76 US/Imp. pt.)
When overhauling :
3.7 liters (7.82/6.51 US/Imp. pt.)

1. Dipstick	4. “LOW HOT” mark
2. Exhaust manifold cover	5. “FULL COLD” line
3. “FULL HOT” mark	6. “LOW COLD” line

Oil cooler hoses

The rubber hoses for the oil cooler should be checked at specified interval. When replacing them, be sure to note the following.

- Replace clamps at the same time
- Insert hose as far as its limit mark
- Clamp clamps securely

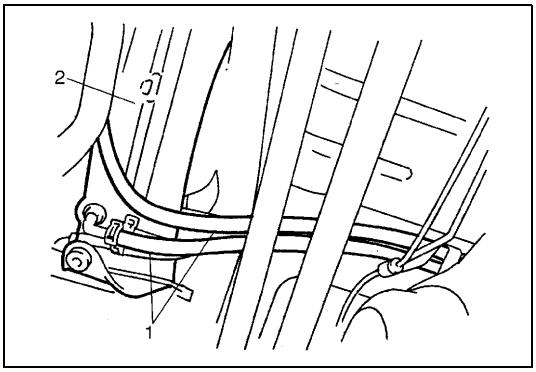

1. Oil cooler hose
2. Radiator

Selector Lever

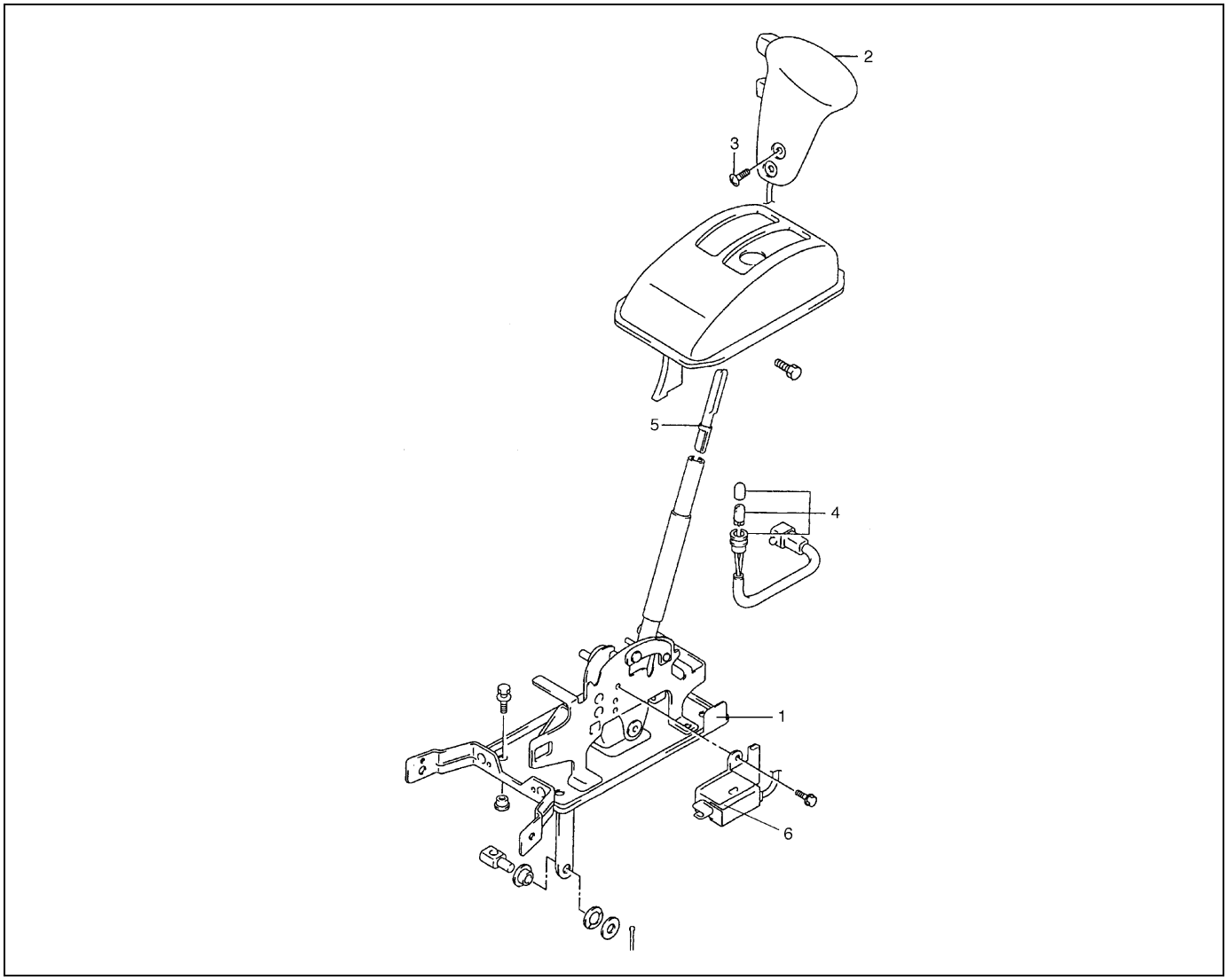

1. Selector lever assembly	4. Illumination lamp assembly
2. Selector lever knob assembly	5. Selector lever guide
3. Screw	6. Shift lock solenoid (if equipped)

INSPECTION

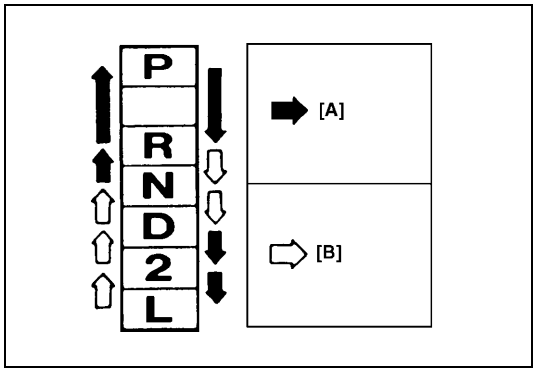

Check selector lever for smooth and clear cut movement and position indicator for correct indication.
For operation of selector lever, refer to the figure.

[A] :	Shift the selector lever with its button pushed in.
[B] :	Shift the selector lever without pushing its button.

Transmission Range Sensor (Shift Switch)

REMOVAL

1) Block wheels and turn selector lever to “N” range.
2) Disconnect transmission range sensor coupler and remove selector rod from shift control shaft lever.
3) Remove shift control shaft lever and then transmission range sensor.

CAUTION:
Do not overhaul transmission range sensor.

INSPECTION

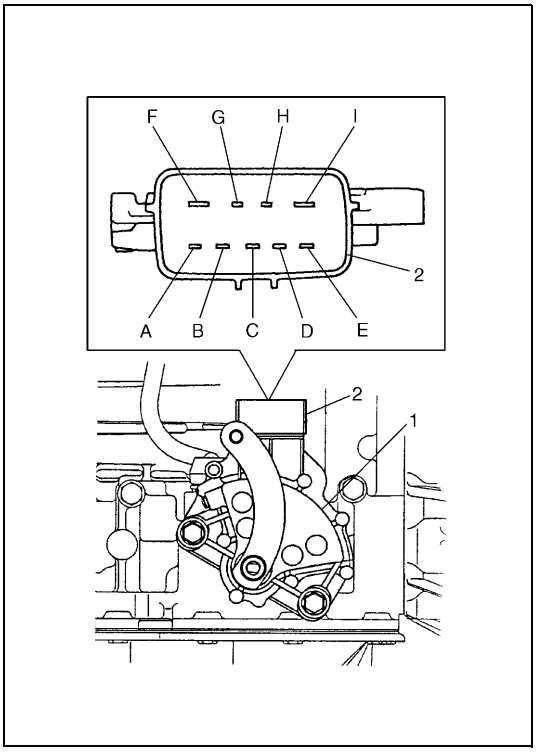

1) Disconnect transmission range sensor coupler (2).
2) Check that continuity exists at terminals shown below by moving selector lever.

Sensor Position \ Terminal No	B	A	H	C	E	D	G	I	F
P			○	—	—	○		○	○
R			○	—	○				
N			○	—	—	—	○	○	○
D			○	○					
2		○	○						
L	○	—	○						

1. Transmission range sensor

INSTALLATION

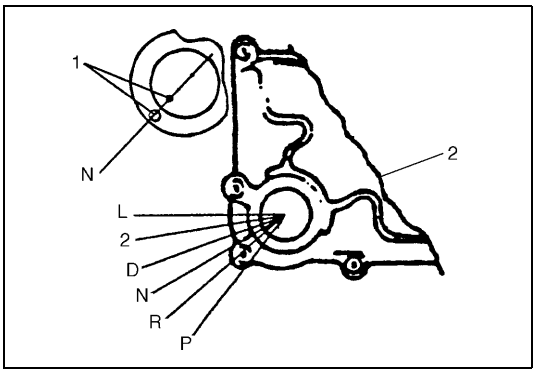

1) Using flat tip screwdriver, turn transmission range sensor (2) to align match marks (transmission range sensor “N” range) (1). Turn shift control shaft to “N” range (to have the automatic transmission to “N” range).

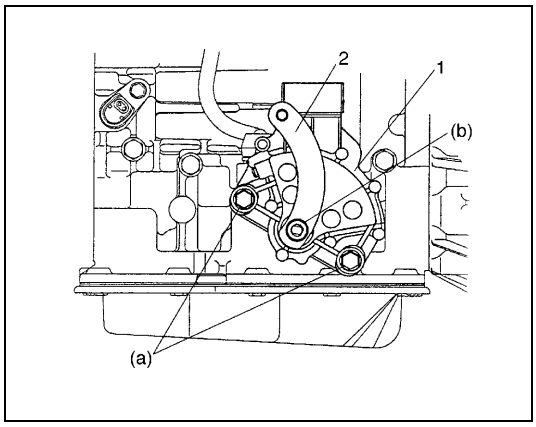

2) Install transmission range sensor (1) to transmission case and then lever to shift control shaft after setting them in “N” position as shown in figure. Tighten bolts and nut to specification.

Tightening torque
Transmission range sensor bolt
(a) : 18 N·m (1.8 kg-m, 13.0 lb-ft)
Shift control shaft nut
(b) : 13 N·m (1.3 kg-m, 9.5 lb-ft)

1. Shift control shaft lever

3) Shift selector lever to “N” position and connect selector rod to shift control shaft lever.
4) Move selector lever in cabin to each range and check the continuity of each terminal of transmission range sensor referring to “Transmission Range Sensor Inspection” in this section.
5) Connect transmission range sensor coupler.
6) Check that the engine can only be started in “N” and “P” range, but can not in “D”, “2”, “L” or “R” range. Also, check that backup lights come ON at “R” range.

Selector Rod

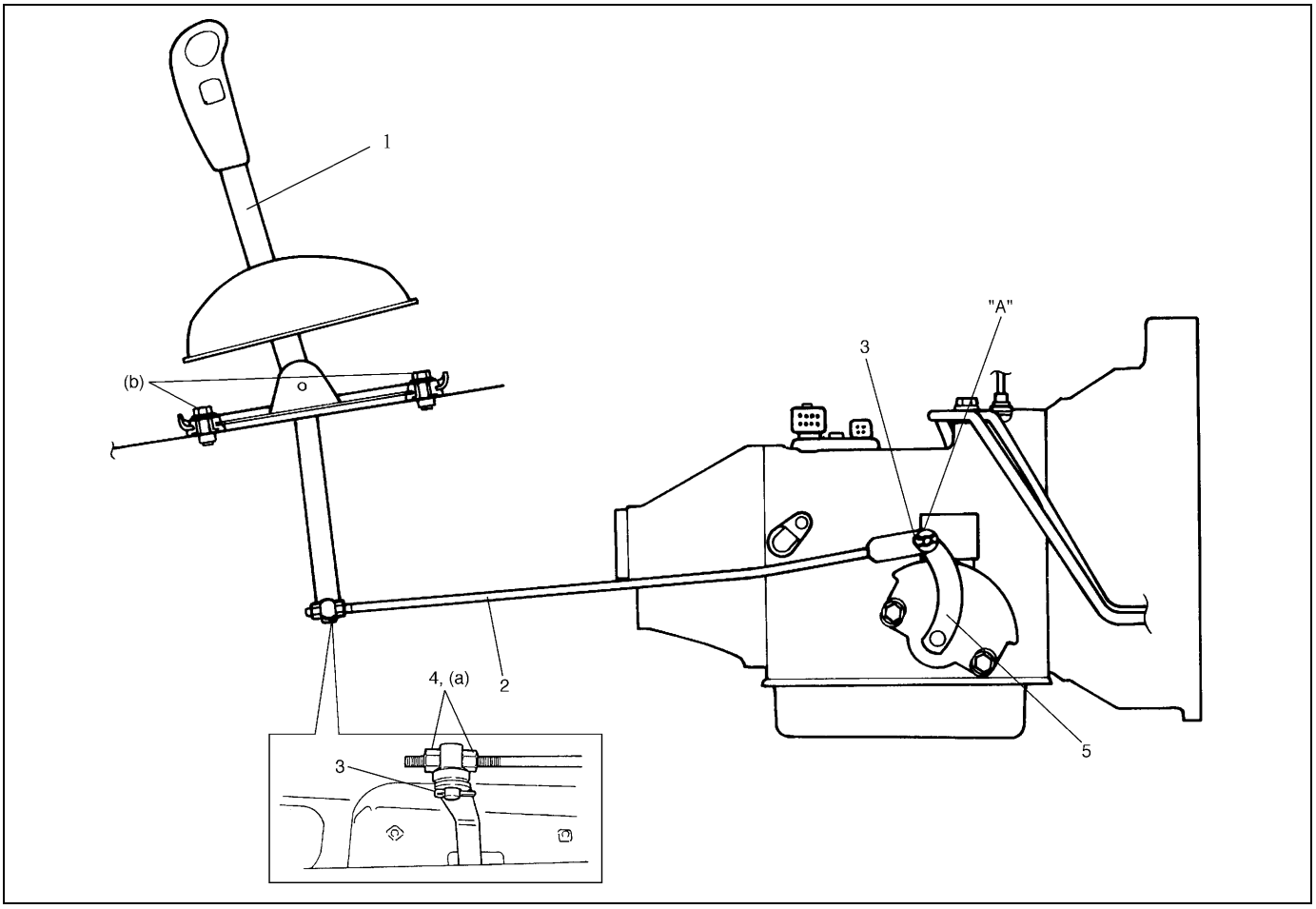

1. Selector lever assembly	4. Selector rod nut
2. Selector rod	5. Shift control shaft lever
3. Clip	

REMOVAL

1) Hoist vehicle.
2) Remove clips on both ends of selector rod.
3) Remove selector rod from transmission and selector lever assembly.

INSTALLATION

Install selector rod by reversing removal procedure.
The important steps in installation are as follows.

- Apply grease to shift control shaft lever pin.

"A" : Grease 99000-32020

- Tighten bolts and nut in the figure to specified torque.

Tightening torque
Selector rod nut
(a) : 7 N·m (0.7 kg-m, 5.0 lb-ft)
Selector lever assembly bolts
(b) : 18 N·m (1.8 kg-m, 13.0 lb-ft)

- Adjusting procedure is as follows.

ADJUSTMENT

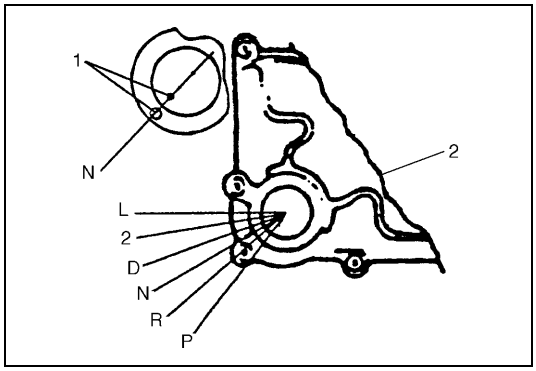

1) Before tightening rod end nut, shift selector lever to N range.
2) Also shift control shaft lever to N range by aligning match marks (1).

NOTE:

Make sure that nuts and rod joint have clearance under above conditions.

2. Transmission range sensor

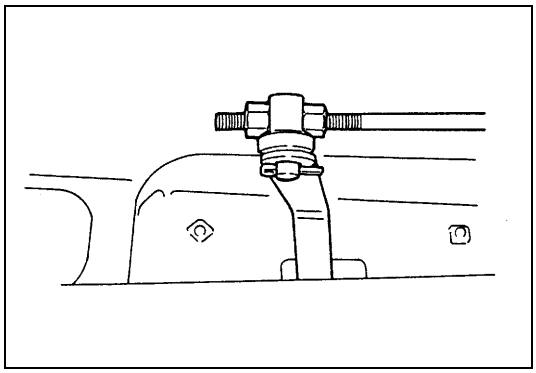

3) Turn nuts by hand till it contacts control shift lever joint. Then tighten them with wrench.
4) After selector rod was installed, check for the following.
- Push vehicle with selector lever shifted to P range. Vehicle should not move.
- Vehicle can not be driven in N range.
- Vehicle can be driven in D, 2 and L ranges.
- Vehicle can be backed in R range.

Output Shaft Speed Sensor

INSPECTION

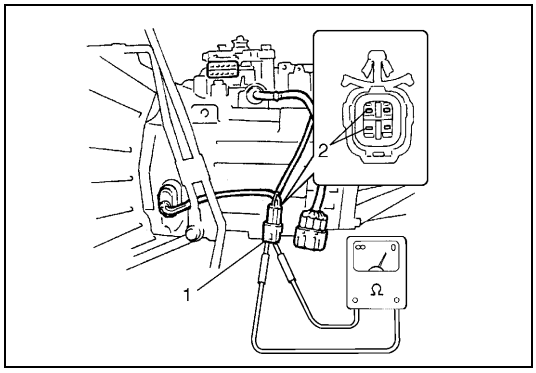

1) Disconnect negative cable at battery.
2) Disconnect output shaft speed sensor – input shaft speed sensor coupler (1).
3) Check resistance between output shaft speed sensor terminals (2).

Output shaft speed sensor resistance
Standard : 160 – 200 Ω at 20 °C (68 °F)

REMOVAL

1) Disconnect negative cable at battery.
2) Disconnect output shaft speed sensor – input shaft speed sensor coupler.
3) Remove output shaft speed sensor – input shaft speed sensor (2) by removing its bolt.

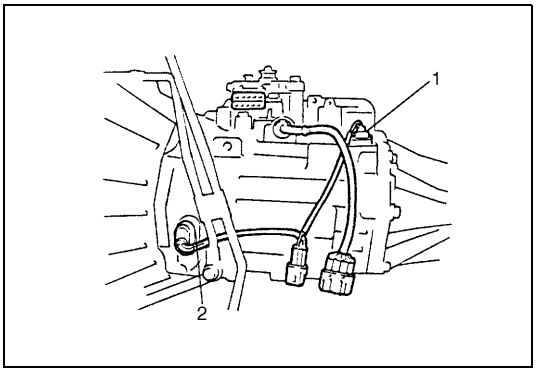

1. Output shaft speed sensor

INSTALLATION

1) Apply A/T fluid to output shaft speed sensor O-ring.
2) Install output shaft speed sensor to A/T case and tighten bolt to specified torque.

Tightening torque
Output shaft speed sensor bolt : 8 N·m (0.8 kg-m, 6.0 lb-ft)

3) Connect output shaft speed sensor – input shaft speed sensor coupler.
4) Connect negative cable to battery.

Input Shaft Speed Sensor

INSPECTION

1) Disconnect negative cable at battery.
2) Disconnect output shaft speed sensor – input shaft speed sensor coupler (1).
3) Check resistance between input shaft speed sensor terminals (2).

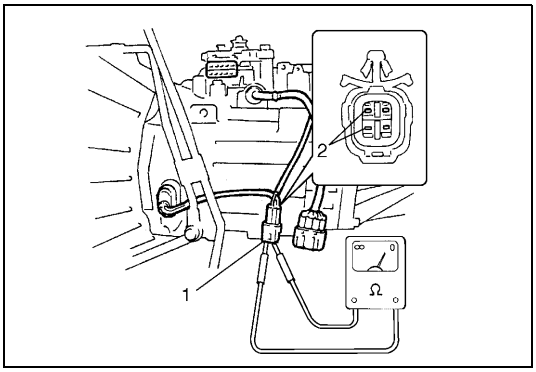

Input shaft speed sensor resistance
Standard : 160 – 200 Ω at 20 °C (68 °F)

REMOVAL

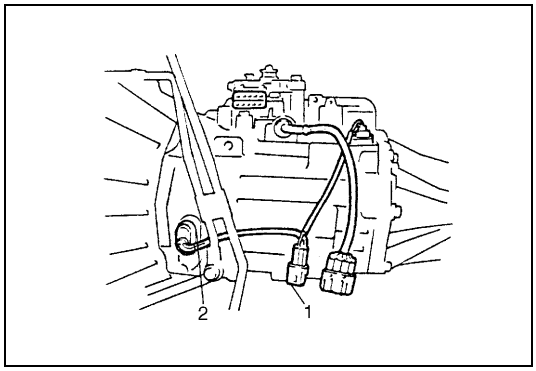

1) Disconnect negative cable at battery.
2) Disconnect output shaft speed sensor – input shaft speed sensor coupler (1).
3) Remove input shaft speed sensor (2) by removing its bolt.

INSTALLATION

1) Apply A/T fluid to input shaft speed sensor O-ring.
2) Install input shaft speed sensor to A/T case and tighten bolt to specified torque.

Tightening torque
Input shaft speed sensor bolt : 8 N·m (0.8 kg-m, 6.0 lb-ft)

3) Connect output shaft speed sensor – input shaft speed sensor coupler.
4) Connect negative cable to battery.

Vehicle Speed Sensor

Refer to Step 7 of “DTC P0500/DTC No.16 Flow Table” in Section 6 for inspection.

Throttle Position Sensor

INSPECTION

Check throttle position sensor referring to Section 6E.

Engine Coolant Temperature (ECT) Sensor

INSPECTION

Check engine coolant temp. sensor referring to Section 6E.

O/D Off Switch

INSPECTION

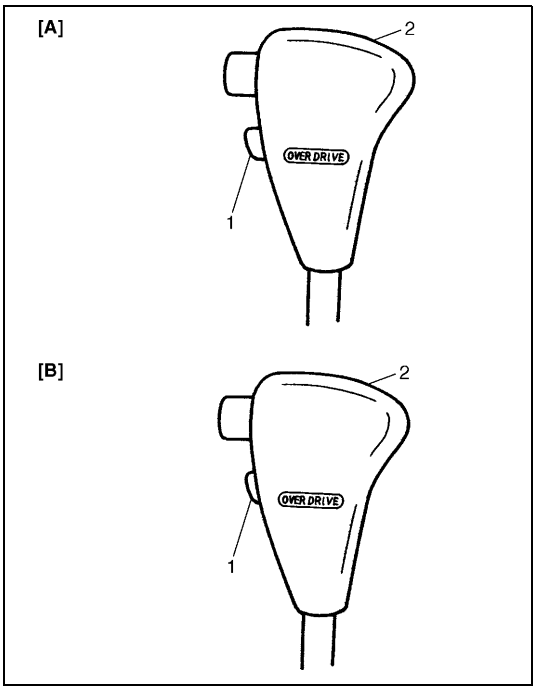

1) Remove console box.
2) Disconnect O/D off switch coupler.
3) Check continuity between O/D off switch terminals.

O/D off switch (1)	ON	OFF
Continuity	Continuity	No continuity

2. Shift lever
[A]: O/D off switch ON
[B]: O/D off switch OFF

Shift Solenoid Valves and Transmission Fluid Temperature Sensor

REMOVAL

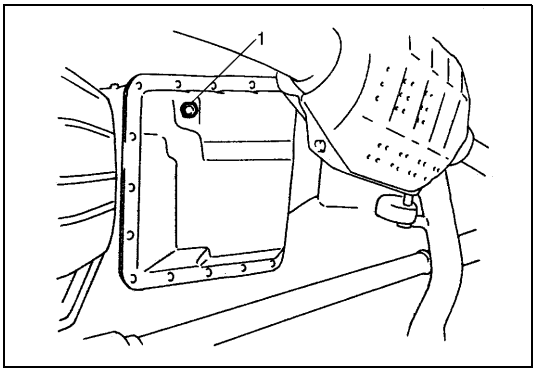

1) Disconnect negative cable from battery.
2) Drain A/T fluid.
3) Remove A/T oil pan.
4) Disconnect transmission fluid temperature sensor coupler.

1. Drain plug

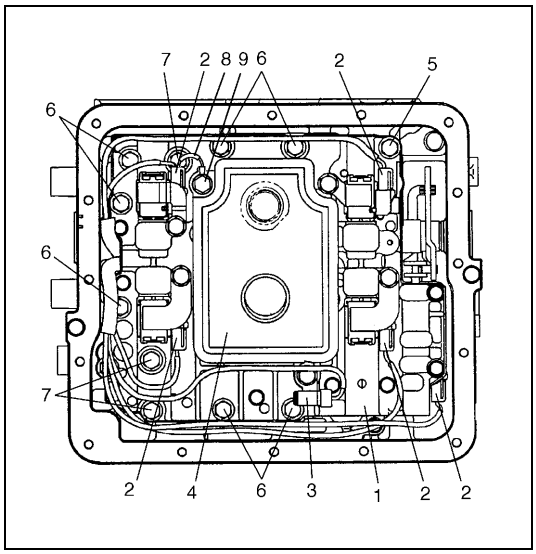

5) Remove one of oil strainer bolts (9) and ground wire (8) for shift solenoid valve No.1.
6) Disconnect shift solenoid and transmission fluid temperature sensor (3) couplers (2).
7) Remove shift solenoid valves (No.1, No.3 and No.4) and lock-up solenoid valve.
8) Remove valve body assembly (1).
9) Remove shift solenoid valve No.2.

4.	Oil strainer assembly
5.	Bolt A
6.	Bolt B
7.	Bolt C

Shift solenoid valves and lock-up solenoid valve

INSPECTION

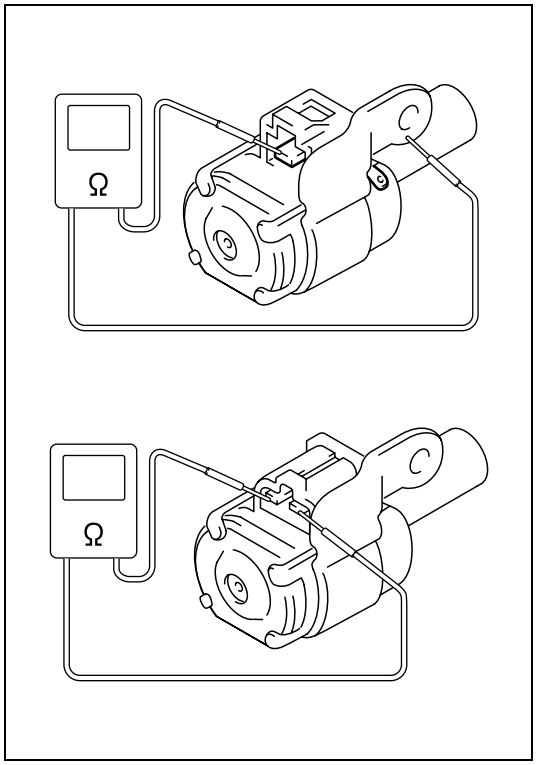

Resistance Check

- Shift solenoid No.1, No.2, No.3, No.4 and lock-up solenoid. Check resistance between terminals or terminal and solenoid body.

Shift solenoid valves and lock-up solenoid valve resistance
Standard : 11.5 – 12.5 Ω

1.	Shift solenoid or lock-up solenoid

Operation check

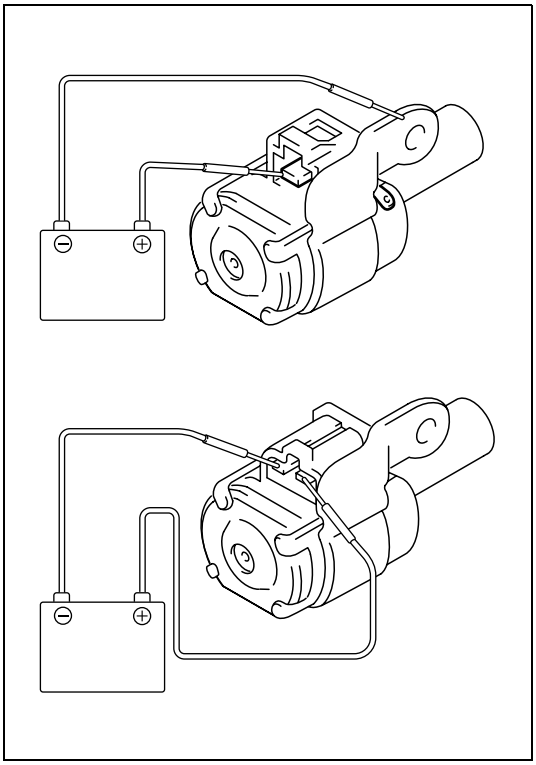

Shift solenoid valves No.1, No.2, No.3, No.4 and lock-up solenoid When solenoids is connected to the battery (2) as shown in figure, check that the solenoid actuates with a click sound.

1. Shift solenoid or lock-up solenoid

Transmission fluid temperature sensor

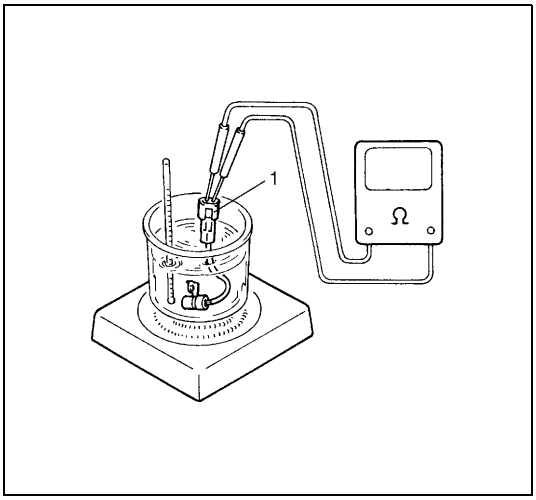

INSPECTION

Warm up transmission fluid temperature sensor. Thus make sure its resistance decrease with the increase of temperature.

Transmission fluid temperature sensor resistance

Temperature	Resistance
20 °C (68 °F)	2.5 Ω
40 °C (104 °F)	1.2 Ω
60 °C (140 °F)	0.6 Ω
80 °C (176 °F)	0.3 Ω

1. Transmission fluid temperature sensor coupler

INSTALLATION

Reverse removal procedure for installation noting following points.

- Tighten solenoid valve bolts and valve body assembly bolts to specification referring to “Unit Assembly” in this section.

Tightening torque
Solenoid valve bolts : 8 N·m (0.8 kg-m, 6.0 lb-ft)

Tightening torque
Valve body bolts
: 10 N·m (1.0 kg-m, 7.5 lb-ft)

- Make sure that slot of manual valve is fitted to pin of manual valve lever.

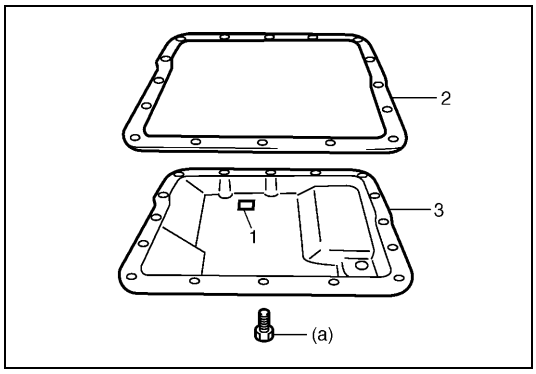

- Clean mating surface of A/T oil pan (3) and A/T case and install new gasket (2) to A/T oil pan.
  Tighten bolts to specification

Tightening torque
A/T oil pan bolts
(a) : 7.5 N·m (0.75 kg-m, 5.5 lb-ft)

1. Magnet

- Refill A/T fluid referring to “Maintenance Service” in this section and verify that there is no A/T fluid leakage.

Extension Case Oil Seal

REPLACEMENT

1) Lift up vehicle and drain transmission oil.
2) Remove propeller shaft No.1 and No.2.
   Refer to “Propeller Shafts” in Section 4B for procedure.

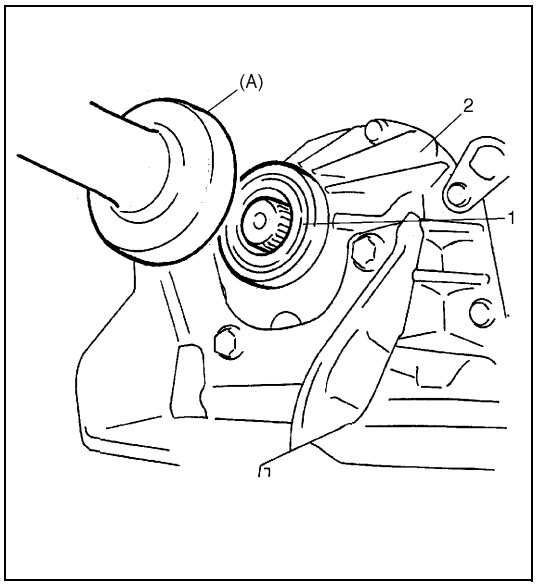

3) Remove extension case (2) oil seal (1) by using screwdriver or like.
4) Install new extension case oil seal by using special tool.

NOTE:

For oil seal installation, press-fit oil seal so that transmission case end face is flush with oil seal end face.

Special tool
(A): 09913-75520

5) Install propeller shafts referring to “Propeller shafts” in Section 4B.
6) Refill A/T fluid referring to “Maintenance Service” in this section.

Transmission Control Module (TCM)

CAUTION:

TCM and ECM consist of highly precise parts, so when handling it (or them), be careful not to expose to excessive shock.

REMOVAL

Remove ECM and separate TCM from ECM bracket.
Refer to “Electronic Control System” in Section 6E for ECM removal.

INSTALLATION

Reverse removal procedure noting the following.

- Connect ECM and TCM couplers securely.
- If the vehicle is equipped with air bag system, be sure to enable air bag system after TCM and ECM are back in place. Refer to “Enabling Air Bag System” in Section 10B.

Learning Control Memory Initialization

Initialization of learning control memory in TCM should be made upon replacement of parts as explained below.

- Automatic transmission assembly replacement with new or used one
- Any A/T brake component parts replacement such as discs, plates and flange with new or used one(s)
- Any A/T clutch component parts replacement such as discs, plates and flange with new or used one(s)
- Replacement of TCM with used one

1) Turn ignition switch to “ON” position. (Do not start engine.)
2) Bring diagnosis switch terminal (2) of monitor coupler (1) in contact with ground terminal (3) using service wire.
3) Repeat shifting selector lever from “D” to “2” position and vice versa for 3 times within 10 seconds to complete memory initialization.
4) Confirm initialization by DTC set in system referring to “DTC Check” in this section.
   DTC No.12: completion of initialization is confirmed
   DTC No.52: initialization is failed
5) If you failed initialization, repeat steps 1) to 3).

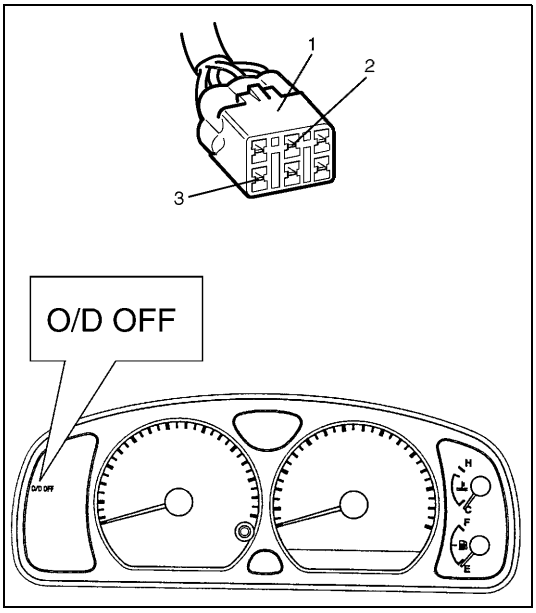

NOTE:

- **“O/D OFF” lamp continues to turn on while initialization.**
- **DTCs which might have been set in system other than No.12 and 52 are also erased by initialization.**

Interlock Cable (if equipped)

NOTE:

Don’t bend interlock cable excessively when removing and installing it, or system will not operate correctly.

REMOVAL

1) Disconnect negative cable at battery and disable air bag system, referring to “Disabling Air Bag System” in Section 10B.
2) Remove steering upper and lower cover.

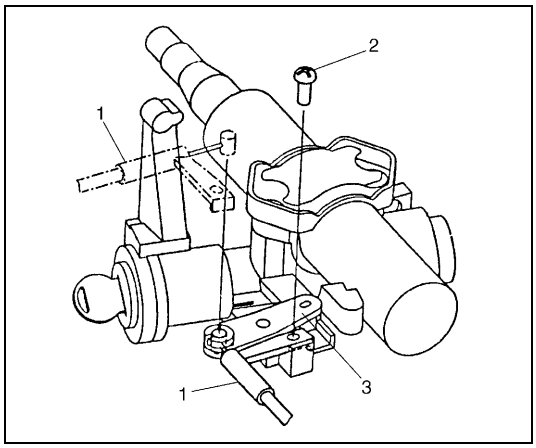

3) Remove interlock cable (1) clamp screw (2) located at ignition switch and disconnect interlock cable from key cylinder cam (3) with ignition switch turned at “ACC” position. And then turn ignition switch to “LOCK” position.

4) Remove parking brake cover and console box.

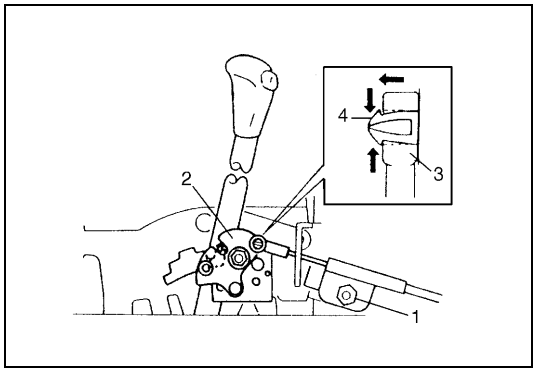

5) Remove cable bracket nut (1) and detach cable end (3) from key release cam (2) while pressing claws of release cam boss (4).
   At this time, be careful not to cause damage to its claws.
6) Remove interlock cable.

INSTALLATION

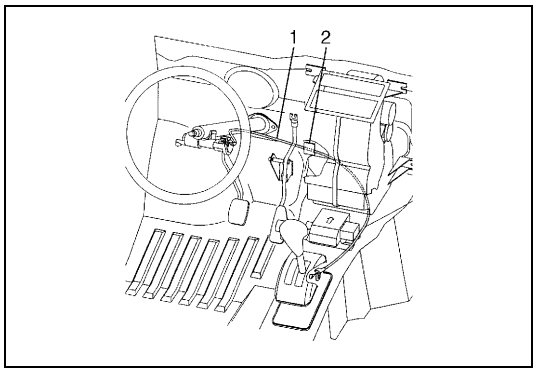

1) Install interlock cable (1) as shown in figure.

2. Tape

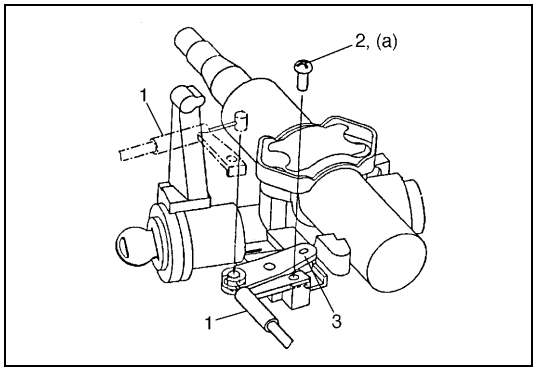

2) Connect cable (1) end to steering lock and tighten cable clamp screw (2) securely.

Tightening torque
Interlock cable screw
(a) : 2.2 N·m (0.22 kg-m, 1.6 lb-ft)

3. Key cylinder cam

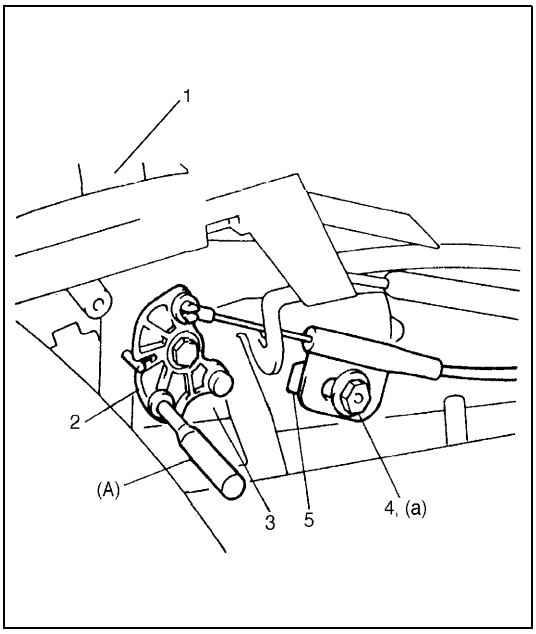

3) Shift selector lever (1) to “P” position and with lock plate manually moved toward front side of vehicle, push knob button of selector lever.
4) Under above condition, fix key release cam (2) inserting special tool into holes on cam and selector bracket (3).

Special tool
(A) : 09925-78210 (6 mm)

5) Connect cable end to key release cam.
6) With cable bracket pushed in arrow direction by spring force, tighten cable bracket nut (4).

Tightening torque
Interlock cable bracket nut
(a) : 13 N·m (1.3 kg-m, 9.5 lb-ft)

5. Leaf spring

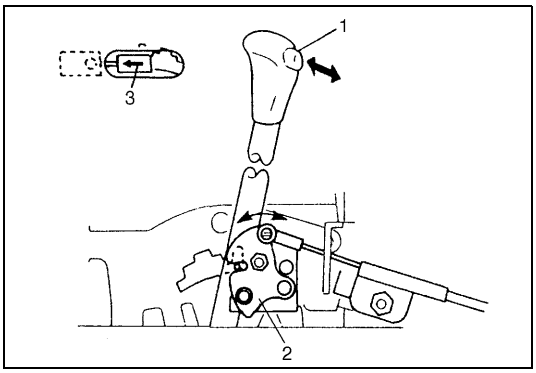

7) Remove special tool. Then with lock plate of shift lock solenoid (3) manually moved toward front side of vehicle, check that key release cam (2) moves smoothly by operating knob button (1) of selector lever.

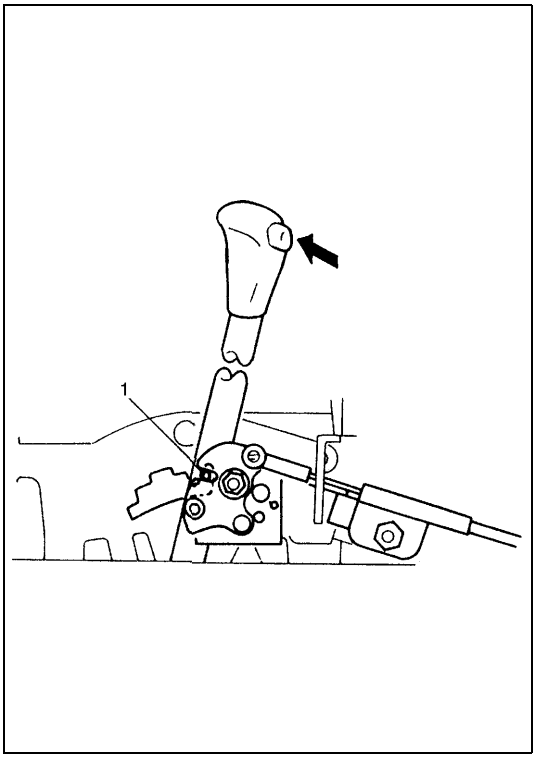

8) With selector lever set at “P” position, turn ignition key to “ACC” position and then check for following conditions.
   - With knob button released, ignition key can be turned from “ACC” position to “LOCK” position.
   - With knob button pressed, ignition key cannot be turned from “ACC” position to “LOCK” position.
9) Install steering upper and lower cover.
10) Connect negative cable at battery and enable air bag system, referring to “Enabling Air Bag System” in Section 10B.

1. Detent pin position when knob button is pressed at “P” position

Unit Repair Overhaul

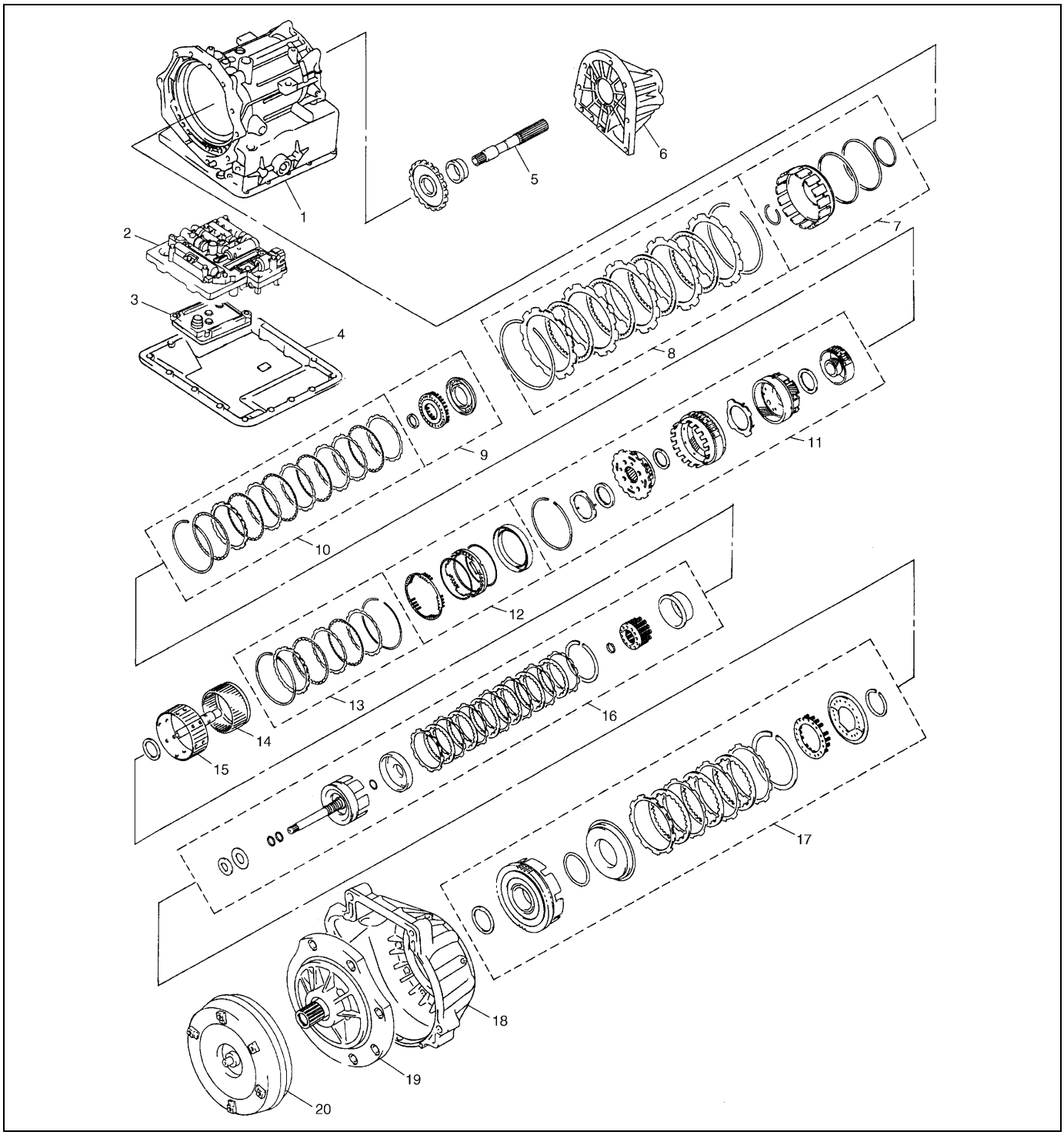

1. Transmission case	6. Extension case	11. Planetary gear assembly	16. C2 (Rear clutch) assembly
2. Valve body assembly	7. B2 (reverse brake) piston assembly	12. B0 (O/D brake) piston assembly	17. C1 (front clutch) assembly
3. Oil strainer	8. B2 brake assembly	13. B0 brake assembly	18. Torque converter housing
4. A/T oil pan	9. B1 (1st & 2nd brake) piston assembly	14. Front planetary sun gear	19. Oil pump assembly
5. Output shaft	10. B1 brake assembly	15. Intermediate shaft	20. Torque converter

NOTE:

When transmission is replaced, or when any A/T clutch or brake component parts such as discs, plates and flange are replaced with new or used one(s), learning control memory of TCM should be initialized after those replacement referring to “Learning Control Memory Initialization” in this section.

Unit Dismounting

NOTE:

If automatic transmission is overhauled later on, draining A/T fluid at this point will facilitate work.

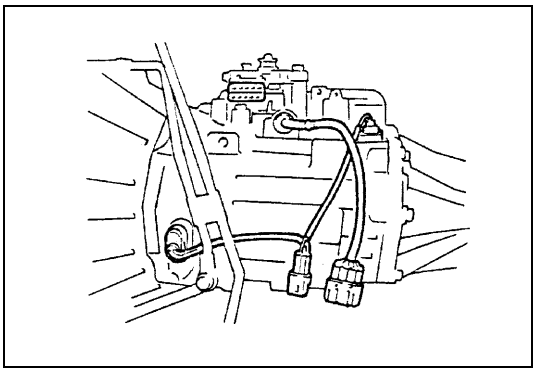

1) Remove following parts.
   - Propeller shafts No.1 and No.2 (refer to “Propeller shafts” in Section 4B)
   - Exhaust pipe (refer to “Component” in Section 6K)
   - Negative cable from battery
2) Disconnect couplers. (2 couplers from wire harness and 1 from shift switch)

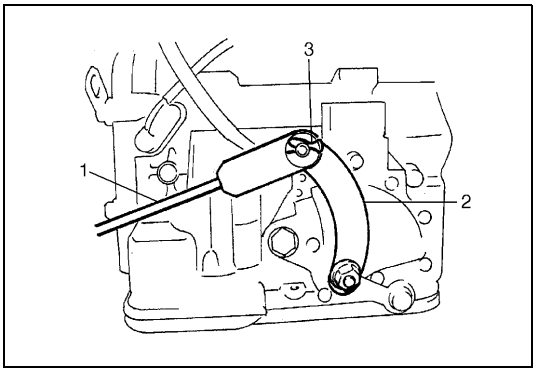

3) Remove selector rod (1) from shift control shaft lever (2) by removing pin (3).
4) Remove oil cooler hoses from pipes.

NOTE:

To avoid leakage of transmission fluid, plug open ends of oil cooler pipes and hoses right after they are disconnected.

5) Remove torque converter housing lower plate.

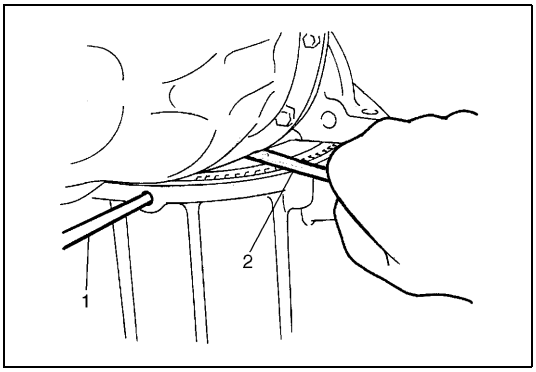

6) Remove drive plate bolts.
   To lock drive plate, engage a flat screwdriver (1) with drive plate gear.

2. Wrench

7) Remove starting motor.

8) With transmission held up on jack, remove engine to transmission bolts and nuts.

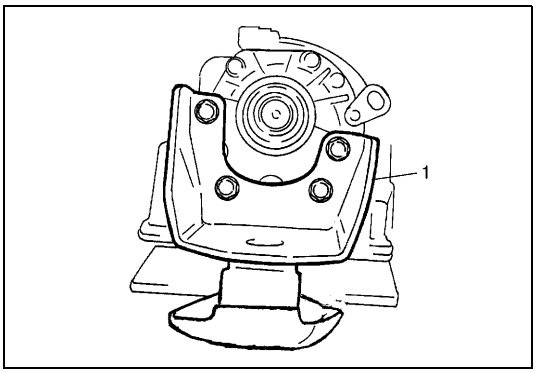

9) Remove transmission rear mounting bracket (1).
10) Move transmission to the rear a little and lower it including torque converter.

WARNING:

Be sure to keep transmission horizontal throughout the work. Should it be tilted, torque converter may fall off and cause personal injury and A/T fluid may flow out.

Unit Remounting

WARNING:

When moving transmission assembly with torque converter equipped in it, be sure to keep it horizontal. Tilting it with its front facing down may allow converter to fall off. Whereby an injury may result.

For remounting, reverse dismounting procedure. Use specified torque as given below and left.

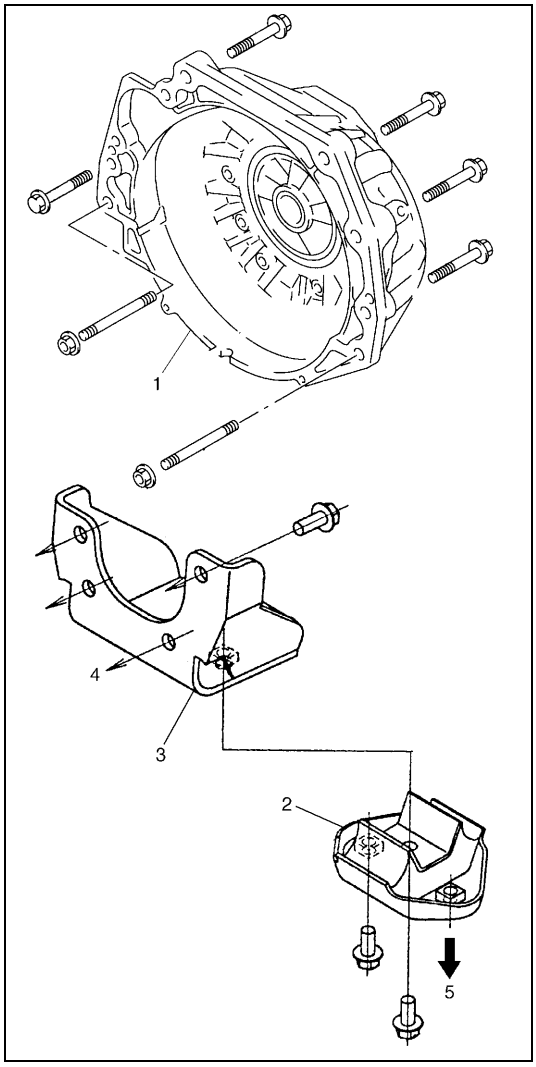

Tightening torque	N·m	kg-m	lb-ft
Exhaust pipe to manifold bolts	50	5.0	36.5
Muffler to exhaust pipe bolts	50	5.0	36.5
Universal joint flange bolts and nuts	50	5.0	36.5
Drive plate bolts	19	1.9	14.0
Engine to transmission bolts and nuts	80	8.0	58.0
Rear mounting bracket to transmission bolt	25	2.5	18.0
Rear mounting to bracket bolt	25	2.5	18.0
Frame to rear mounting bolts	25	2.5	18.0

- Clamp wiring harness and hoses securely.
- Refer to “Selector Rod” in this section for adjusting procedure of selector rod.
- Follow fluid level check procedure in “Maintenance Service” in this section for refilling automatic transmission fluid, its level adjusting and fluid specification.
- Connect battery, and confirm that engine and transmission function acceptably.
- When remounting drive plate, use specified bolts.

1.	Torque converter housing
2.	Transmission rear mounting
3.	Transmission rear mounting bracket
4.	To transmission
5.	To frame

Unit Disassembly

CAUTION:

- **Thoroughly clean transmission exterior before overhauling it.**
- **Keep working table, tools and hands clean while overhauling.**
- **Use special care to handle aluminum parts so as not to damage them.**
- **Do not expose removed parts to dust. Keep them always clean.**

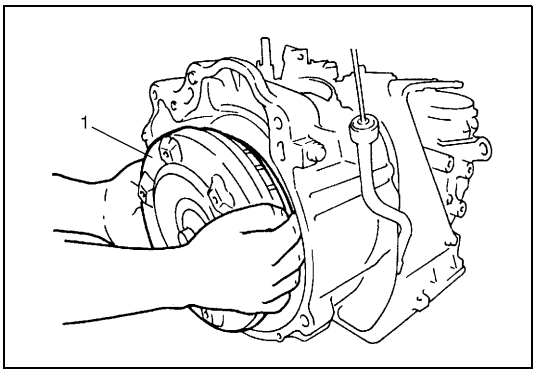

1) Remove torque converter (1).

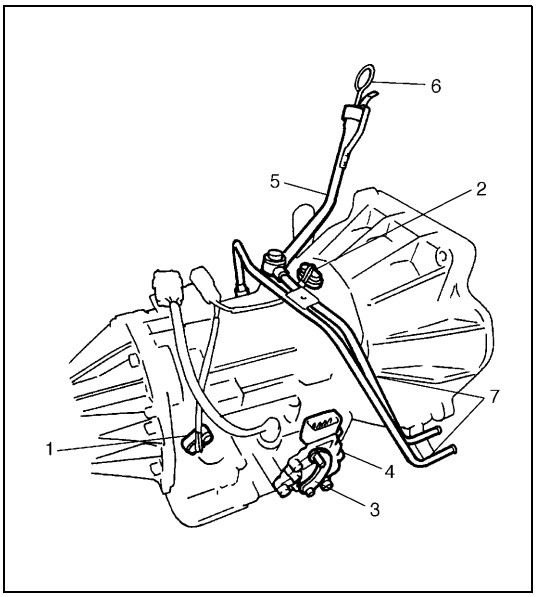

2) Remove following parts.
- Battery ground cable (if still attached)
- Output shaft speed sensor (1) and input shaft speed sensor (2)
- Shift control shaft lever (3) and transmission range sensor (4)
- A/T fluid level gauge (6) and filler tube (5)
- Oil cooler pipes (7)

3) Remove oil pan and oil pan gasket.

NOTE:

For removal of oil pan, do not turn transmission over as this will contaminate valve body with foreign matters in the bottom of oil pan.
When removing oil pan, tap around it lightly with a plastic hammer. Do not force it off by using a screwdriver or the like.

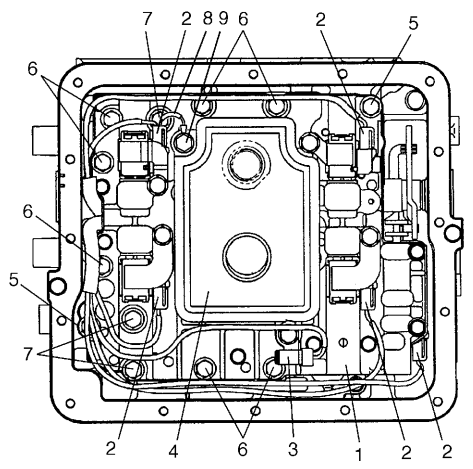

4) Remove one of oil strainer bolts (9) and ground wire (8) of shift solenoid valve No.1.
   Disconnect couplers (2) from solenoid valves, and transmission fluid temperature sensor.
   Remove transmission fluid temperature sensor (3) and oil strainer assembly (4).
5) Remove valve body assembly (1).

CAUTION:

Be careful not to let manual valve fall off when removing valve body assembly.

NOTE:

There are three kinds of bolts fixing valve body assembly (1).

5.	Bolt A
6.	Bolt B
7.	Bolt C

6) Remove solenoid harness assembly.

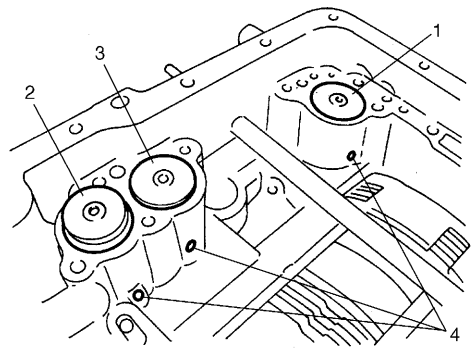

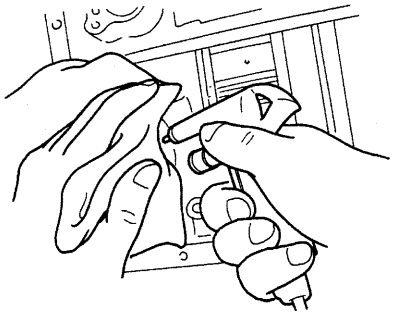

7) Remove accumulator pistons and springs.
   To remove C1 (1), C2 (2) and B1 (3) accumulator pistons and springs, position a rag on pistons to catch each piston.
   To remove pistons, force low-pressure compressed air (1 kg/cm^2, 15 psi, 100 kPa, max) into hole (4) as shown in figure, and pop each piston into the rag.
   To remove B0 accumulator piston and spring, remove snap ring and accumulator spacer, then remove spring and piston.

NOTE:

Do not push accumulator pistons with fingers or anything before removing them. Pushing them may cause compressed fluid in accumulator to spew out of hole and get to your face and clothes.

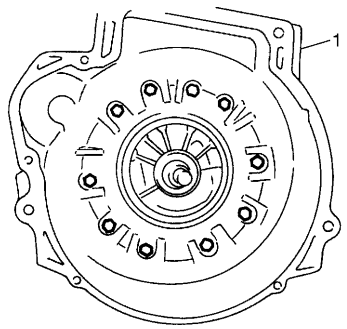

8) Remove torque converter housing (1).
   a) Remove housing bolts.
   b) Remove housing while tapping around it lightly with a plastic hammer.

NOTE:

Never reuse housing bolts.

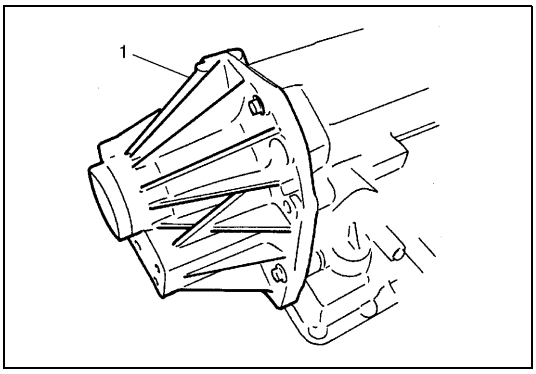

9) Remove extension case (1) and disconnect output shaft assembly.
Remove thrust bearing from transmission case.

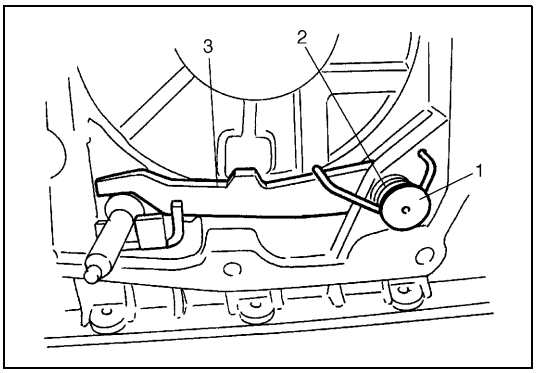

10) Remove parking pawl shaft (1), spring (2) and then parking pawl (3).

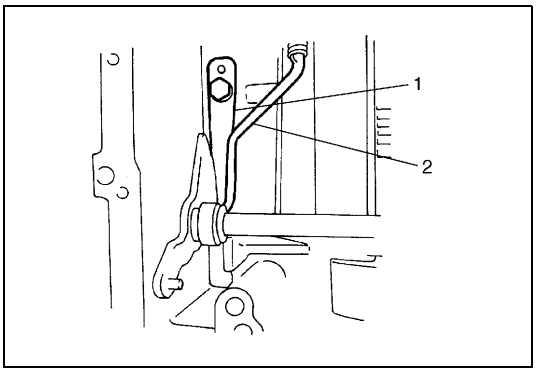

11) Remove detent spring (1) and parking rod (2).

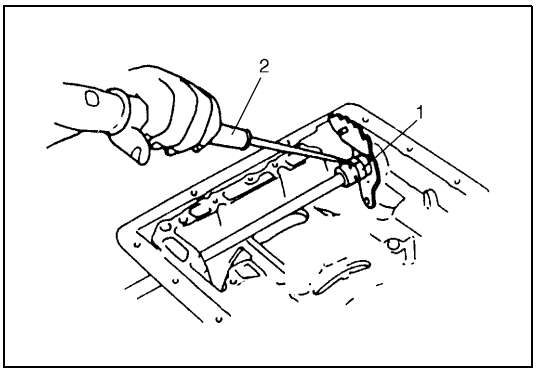

12) Remove manual shift shaft as follows, if necessary.
a) Remove sleeve cover (1) by using caulking tool (2).

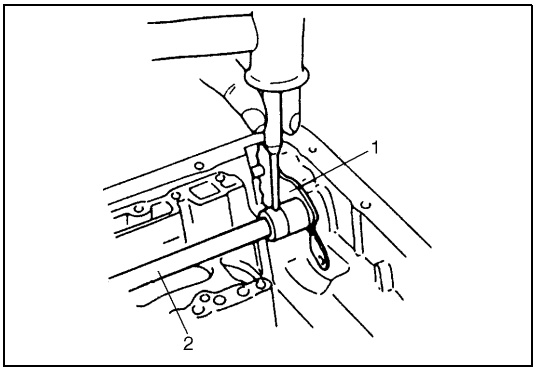

b) Using a punch, drive out manual shift lever pin, pull out manual shift shaft (2) and remove manual shift lever (1). Then remove sleeve cover from manual shift lever.
Remove oil seal from both sides of transmission case and replace as necessary.

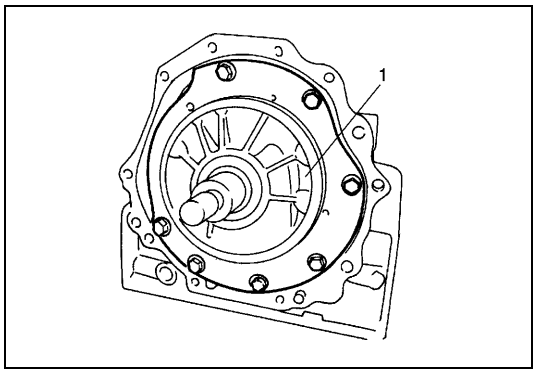

13) Remove oil pump (1).

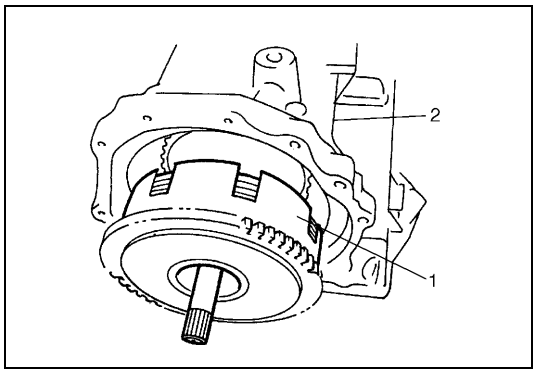

14) Remove front disc clutch assembly (1).

2. Transmission case

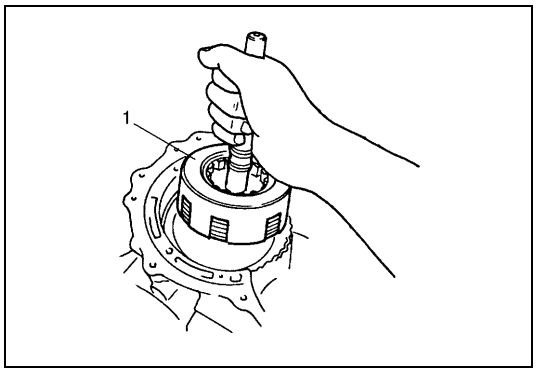

15) Remove rear disc clutch assembly (1).

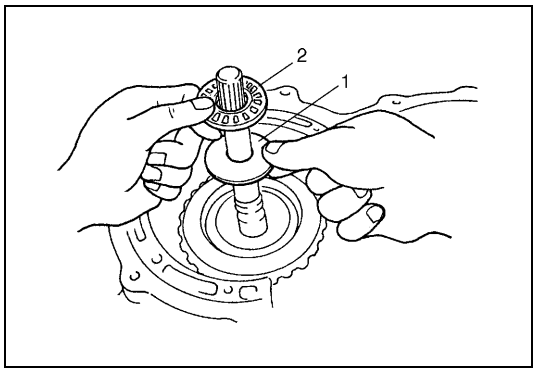

16) Remove thrust bearing race (1) and thrust needle roller bearing (2).

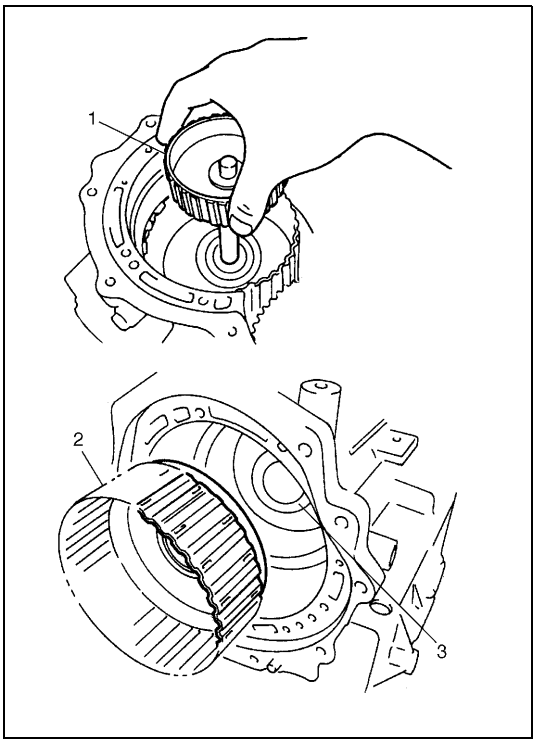

17) Remove intermediate shaft assembly (1) and front sun gear (2).

3. Thrust bearing

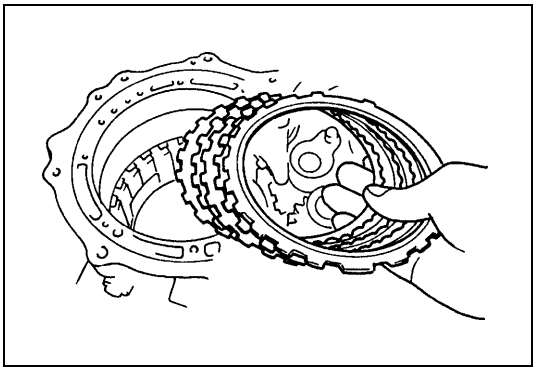

18) Remove B0 brake snap ring, brake flanges, brake discs and brake plates.

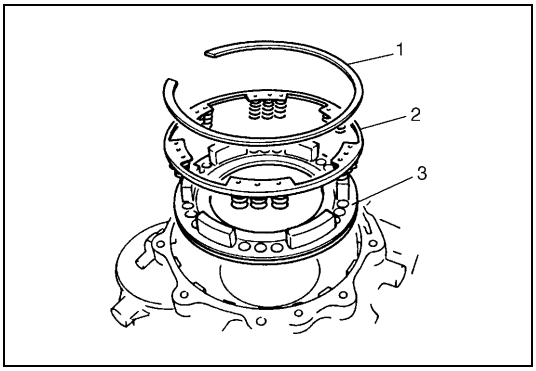

19) Remove snap ring (1) then remove B0 brake piston return spring subassembly (2) and B0 brake piston (3) & drum assembly.

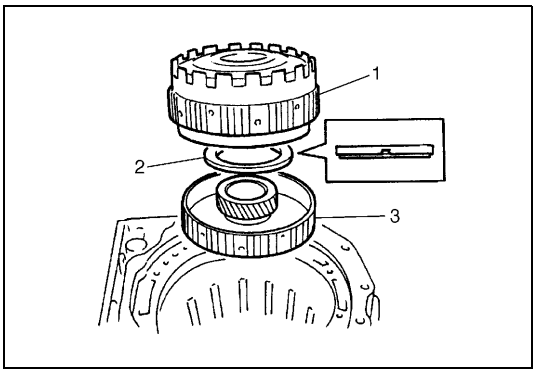

20) Remove planetary carrier assembly (1), thrust needle bearing (2) and rear sun gear (3).

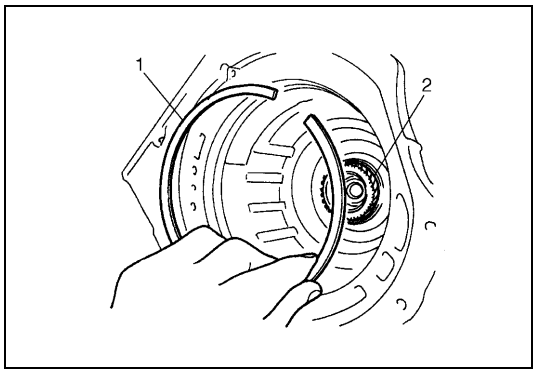

21) Remove B2 brake snap ring (1), brake flange, brake discs, brake plates and cushion plate.

2. Rear sun gear

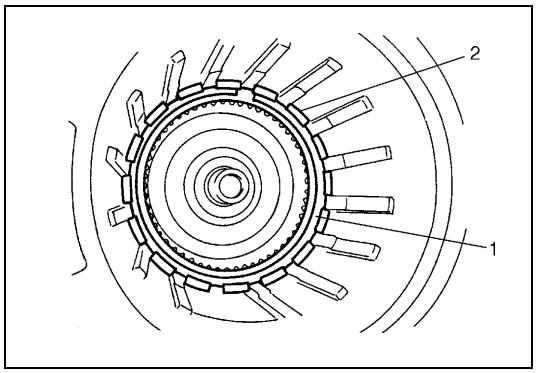

22) Remove B1 brake snap ring (1), brake flange, brake discs and brake plates.

2. B2 brake piston

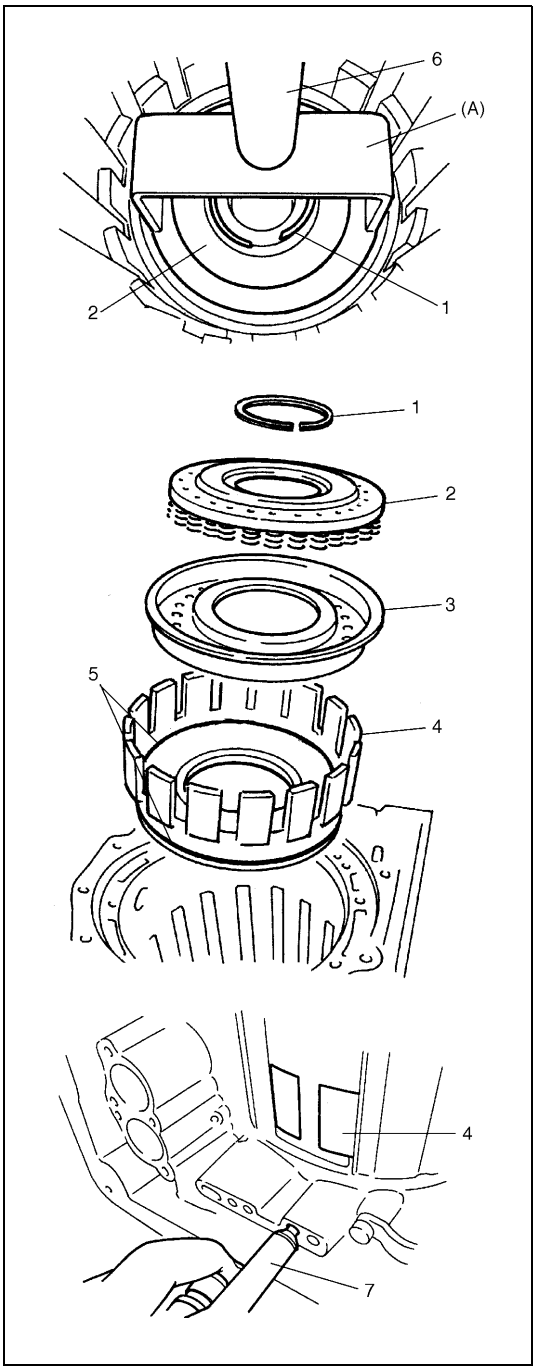

23) Use hydraulic press (6) and special tool to compress B1 & B2 brake return spring seat (2), then remove snap ring (1).

Special tool
(A) : 09926-96010

NOTE:

Do not compress wave spring more than necessary.

24) Remove spring seat and B1 brake piston (3) from B2 brake piston (4).
25) Remove B2 brake piston.
To remove B2 brake piston, force low-pressure compress air (1 kg/cm^2, 15 psi, 100 kPa max) into hole shown in figure, and pop out piston into a rag.

5.	O-ring
7.	Air gun

INSPECTION

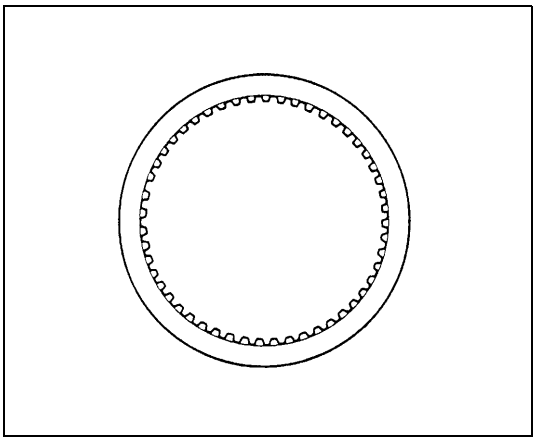

Clutch and Brake Discs

Dry and inspect them for pitting, burn flaking, wear, glazing, cracking, charring and chips or metal particles imbedded in lining. If discs show any of the above conditions, replacement is required.

NOTE:

- **If disc lining is exfoliated or discolored, replace all discs.**
- **Before assembling new discs, soak them in A/T fluid for at least two hours.**

Clutch and Brake Plates and Flanges

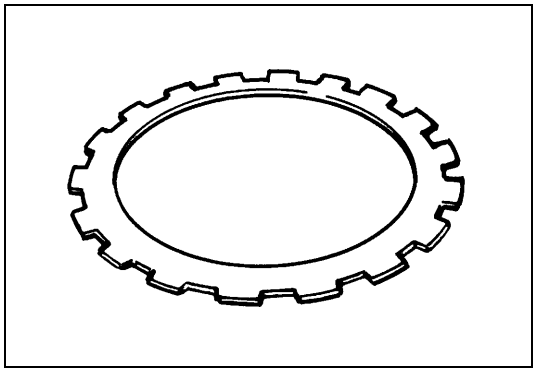

Dry plates and check for discoloration. If plate surface is smooth and even color smear is indicated, the plate should be reused. If severe heat spot discoloration or surface scuffing is indicated, the plate must be replaced.

Brake Piston Return Spring Subassembly

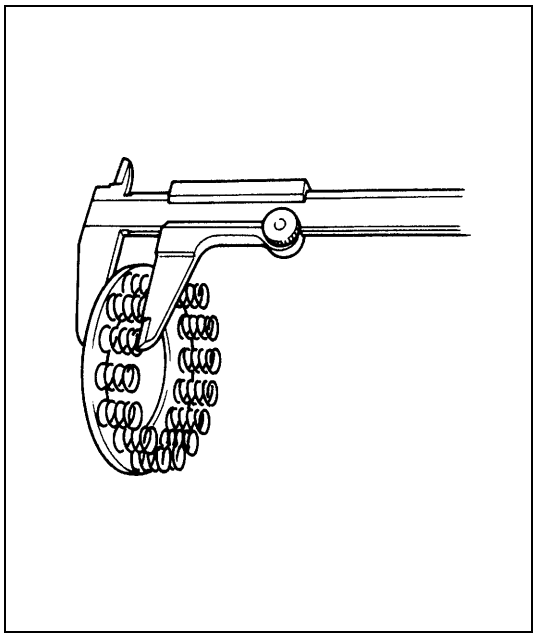

Measure height of B1 & B2 and B0 brake piston return springs.

Brake piston return spring height
Standard :
15.62 mm (6.15 in.) (B1 & B2 return spring assembly)
15.19 mm (5.98 in.) (B0 return spring assembly)

NOTE:

- **Do not apply excessive force when measuring spring height.**
- **Perform measurement at several points.**

Evidence of extreme heat or burning in the area of clutch may have caused springs to take a heat set and would require their replacement.

Disassembly of Subassembly

CAUTION:

- **Keep component parts in group for each subassembly and avoid mixing them up.**
- **Clean all parts with cleaning solvent thoroughly and air dry them.**
- **Use kerosene or automatic transmission fluid as cleaning solvent.**
- **Do not use wiping cloths or rags to clean or dry parts.**
- **All oil passages should be blown out and checked to make sure that they are not obstructed.**
- **Keep face and eyes away from solvent spray while air blowing parts.**
- **Check mating surface for irregularities and remove them, if any, and clean it again.**
- **Soak new clutch discs and brake discs in transmission fluid for at least 2 hours before assembly.**
- **Replace all gaskets and O-rings with new ones.**
- **Apply automatic transmission fluid to all O-rings.**
- **When installing seal ring, be careful so that it is not expanded excessively, extruded or caught.**
- **Replace oil seals that are removed and apply grease to their lips.**
- **Before installing, be sure to apply automatic transmission fluid to sliding, rolling and thrusting surface of all component part. Also after installation, make sure to check each part for proper operation.**
- **Always use torque wrench when tightening bolts.**

Oil pump

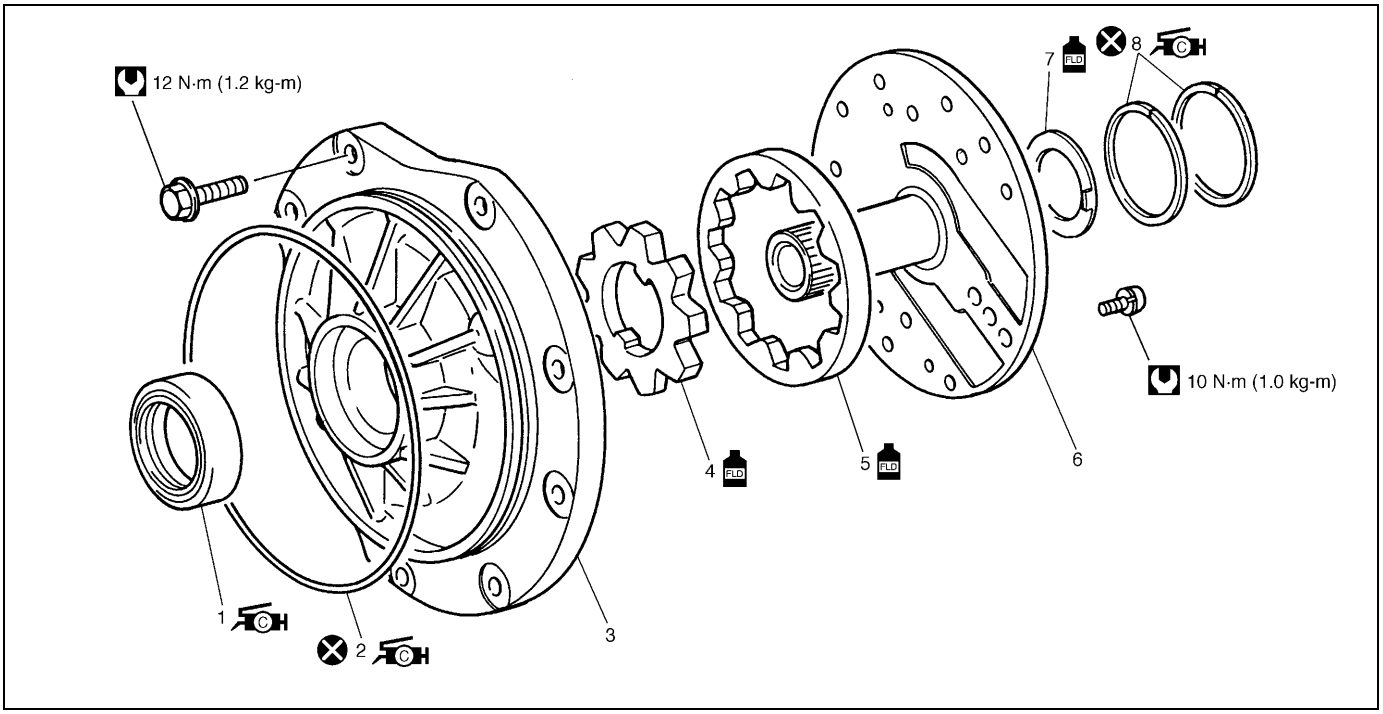

	1. Oil seal : Apply grease 99000-25030 to oil seal lip.		7. Clutch drum thrust washer
	2. D-ring : Apply grease 99000-25030 to all over surface.		8. Clutch drum oil seal ring : Apply grease 99000-25030 to all over surface.
	3. Oil pump body		Apply automatic transmission fluid.
	4. Oil pump drive gear		Tightening torque
	5. Oil pump driven gear		Do not reuse.
	6. Stator shaft assembly		

DISASSEMBLY

1) Remove D-ring from pump body.
2) Remove 2 oil seal rings and clutch drum thrust washer.
3) Remove 11 bolts.
4) Separate pump body from stator shaft assembly.
5) Remove oil seal from pump body.

INSPECTION

1) Inspect pump body oil seal.
   Check for wear, damage or cracks.
   Replace oil seal if necessary and apply grease to its lip portion slightly when it is installed.

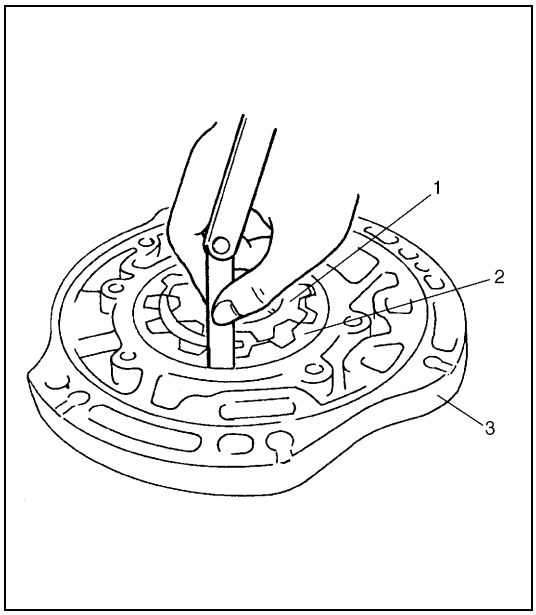

2) Check body clearance of driven gear.
   Push driven gear (2) to one side of body (3). Using a feeler gauge, measure clearance between driven gear and body.
   If clearance exceeds its standard value, replace oil pump assembly.

Clearance between drive gear and body
Standard : 0.08 – 0.15 mm (0.0027 – 0.0059 in.)
Limit : 0.30 mm (0.018 in.)

1. Oil pump drive gear

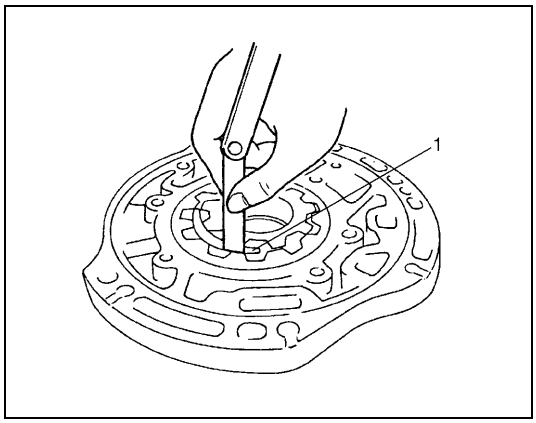

3) Check tip clearance of both drive and driven gears.
   Measure radial clearance between gear tooth and crescent.
   If clearance exceeds its standard value, replace oil pump assembly.

Radial clearance between oil pump gear tooth and oil pump body
Standard : 0.13 – 0.20 mm (0.0051 – 0.0079 in.)
Limit : 0.30 mm (0.018 in.)

1. Pump body crescent portion

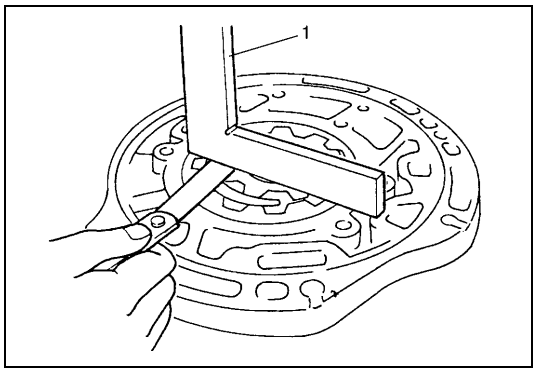

4) Check side clearance of both gears.
   Using a straightedge and a feeler gauge, measure side clearance between gear and pump body.
   If clearance exceeds its standard value, replace oil pump assembly.

Side clearance between gear and oil pump body
Standard : 0.02 – 0.04 mm (0.0008 – 0.0019 in.)

1. Straightedge (Press it down while measuring)

ASSEMBLY

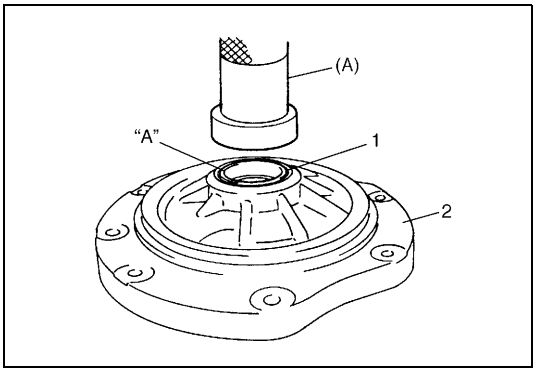

1) Install pump body oil seal (1).
   Use special tool and hammer to install it, and then apply grease to its lip portion.

Special tool
(A) : 09913-85210

"A": Grease 99000-25030

2) Install driven gear and drive gear to pump body (2) after applying A/T fluid to gears.

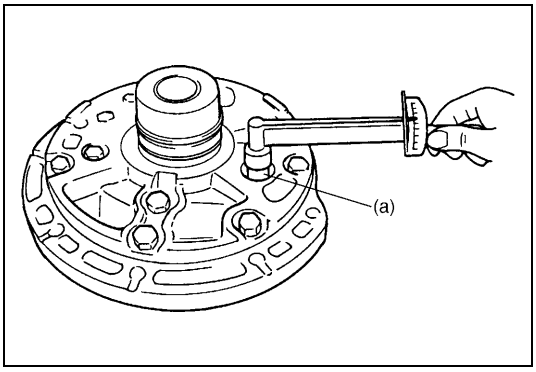

3) Install stator shaft assembly to pump body and tighten 11 pump cover bolts to specification.

Tightening torque
Oil pump cover bolts (a) : 10 N·m (1.0 kg-m, 7.5 lb-ft)

4) Install 2 new oil seal rings to stator shaft.
5) Apply grease to 2 oil seal rings.
6) Install D-ring applied with grease and make sure that it is not twisted or extruded.
7) Check drive gear for smooth rotation.

Front clutch (C1 clutch)

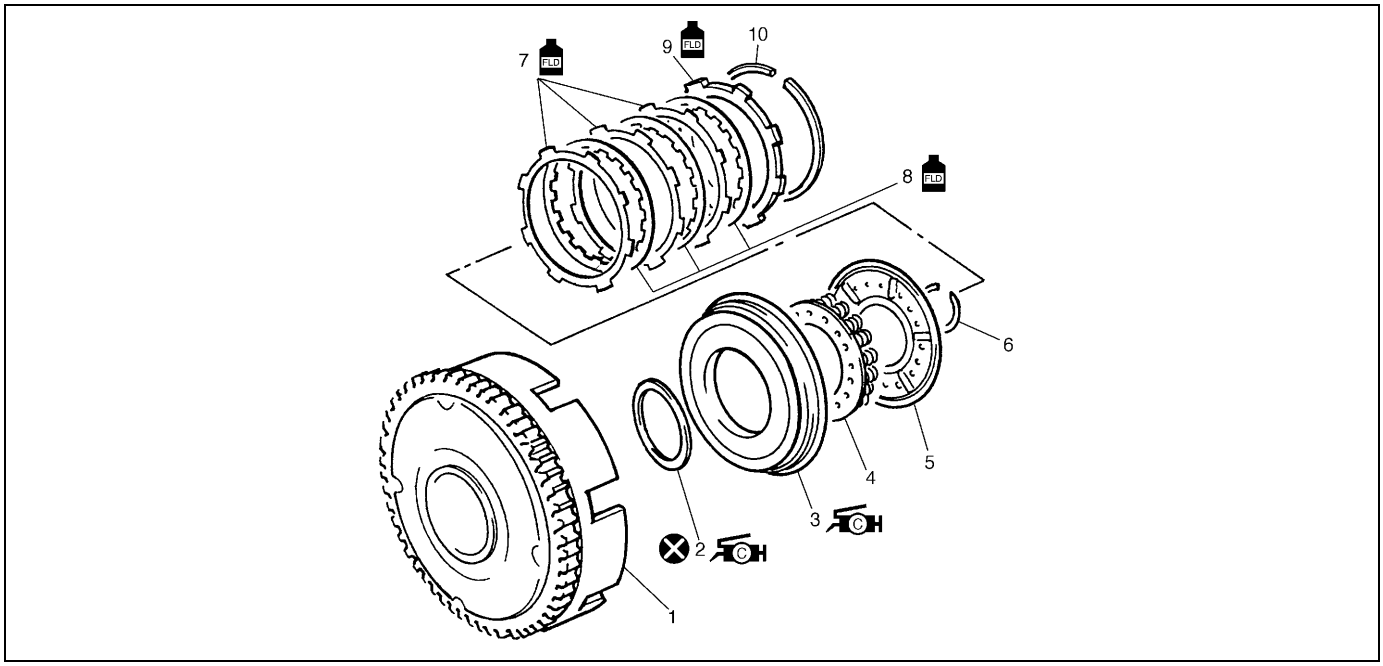

	1. Front clutch No.1 drum		7. Clutch plate
	2. D-ring : Apply grease 99000-25030 to all over surface.		8. Clutch disc
	3. Front clutch piston : Apply grease 99000-25030 to the lip of the piston.		9. Clutch flange
	4. Front clutch return spring seat		10. Snap ring
	5. Front clutch balancer		Apply automatic transmission fluid.
	6. Shaft snap ring		Do not reuse.

DISASSEMBLY

1) Remove snap ring.

2) Remove flange (1), discs and plates.

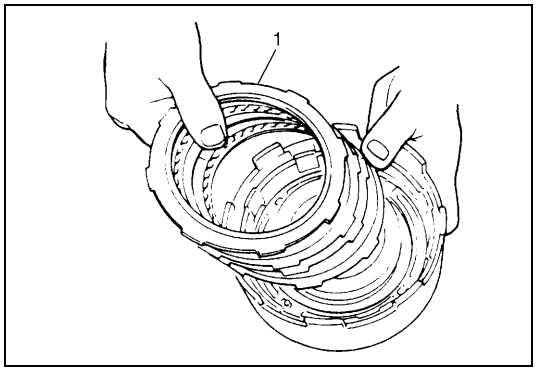

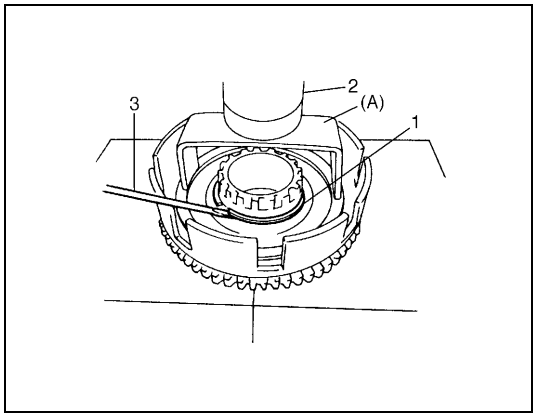

3) Remove shaft snap ring (1).
   Compress piston return springs and remove shaft snap ring. Place special tool (clutch spring compressor) on spring seat and compress spring with a press (2), and then remove shaft snap ring, using a screwdriver (3).

CAUTION:
Do not push down return spring more than necessary.

Special tool
(A) : 09926-96010

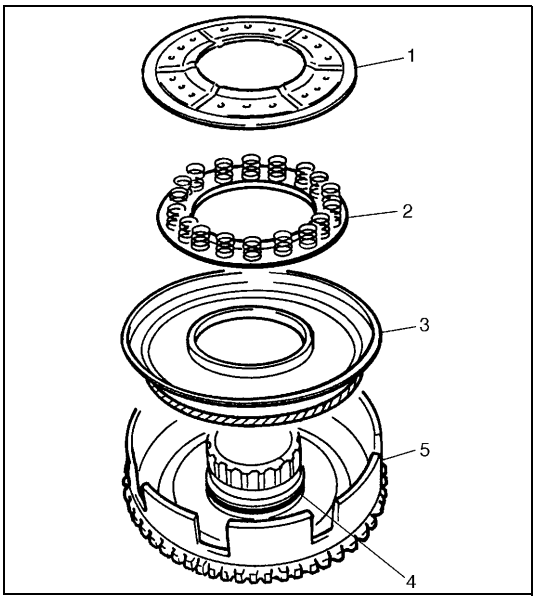

4) Remove front clutch balancer (1) and front clutch return spring seat (2).
5) Remove front clutch piston (3).
   Blow compressed air through input shaft oil hole to remove piston. If piston does not pop out, take it out with long nose pliers.
6) Remove D-ring (4) from front clutch No.1 drum (5).

INSPECTION

Clutch Discs, Plates and Flange

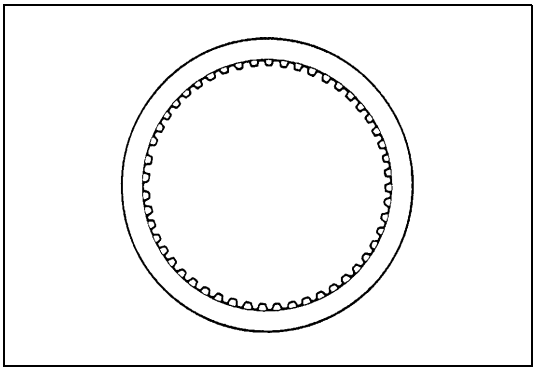

Check that sliding surfaces of discs, plates and flanges are not worn or burnt. If necessary, replace.

NOTE:

- **If disc lining is exfoliated or discolored, replace all discs.**
- **Before assembling new discs, soak them in A/T fluid for at least two hours.**

Front Clutch Return Spring Seat

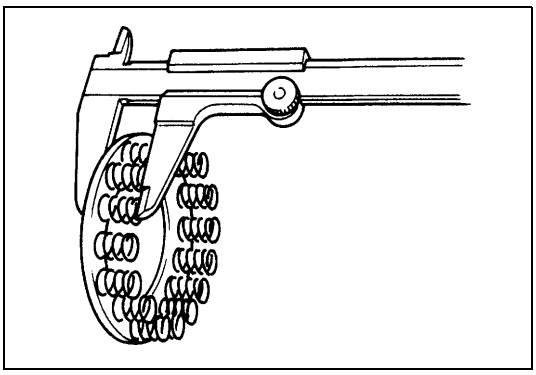

Measure height of front clutch return spring.

Height of front clutch return spring
14.85 mm (0.585 in.)

NOTE:

- **Do not apply excessive force when measuring spring height.**
- **Perform measurement at several points.**

Front Clutch Piston Lip and Front Clutch Balancer Lip

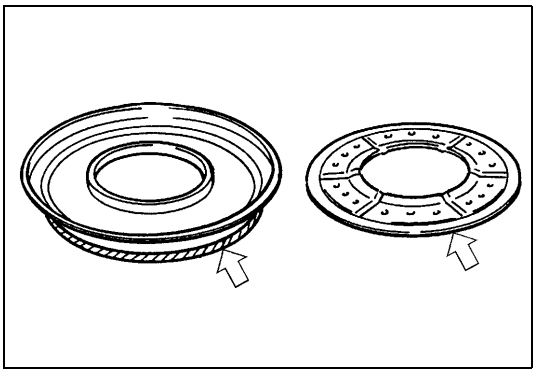

Check each lip for wear, deformation, cut, and/or hardening. If necessary, replace.

ASSEMBLY

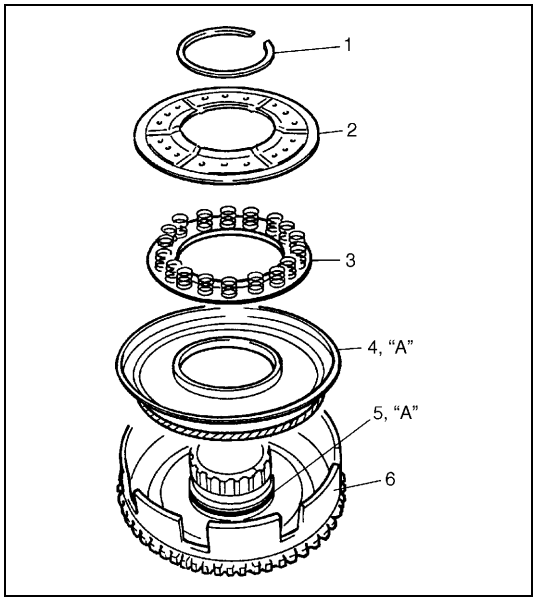

1) Install new D-ring (5) to front clutch No.1 drum.
   Apply grease to D-ring and fit it to drum.

“A” : Grease 99000-25030

2) Install piston (4) into front clutch No.1 drum (6).
   Use care that the piston lip does not get twisted or caught.
   Apply grease to the lip of the piston.

“A” : Grease 99000-25030

3) Install front clutch return spring (3) seat and front clutch balancer (2).

1. Snap ring

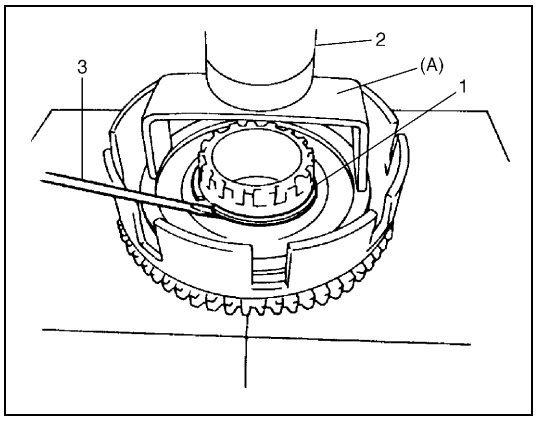

4) Install shaft snap ring (1).
   Compress return springs and install shaft snap ring in groove by using a screwdriver (3).
   Place special tool (clutch spring compressor) on spring seat and compress springs with a press (2).

CAUTION:
Do not compress return spring more than necessary.

Special tool
(A) : 09926-96010

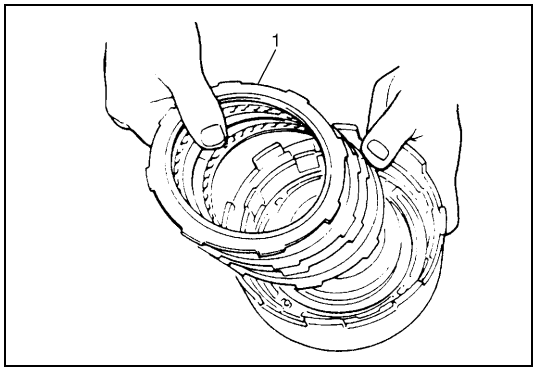

5) Install discs, plates and flange (1) in following order.
   1) Plate → 2) Disc → 3) Plate → 4) Disc → 5) Plate → 6) Disc → 7) Flange

NOTE:
Before assembly, new discs should be soaked in automatic transmission fluid for at least 2 hours.

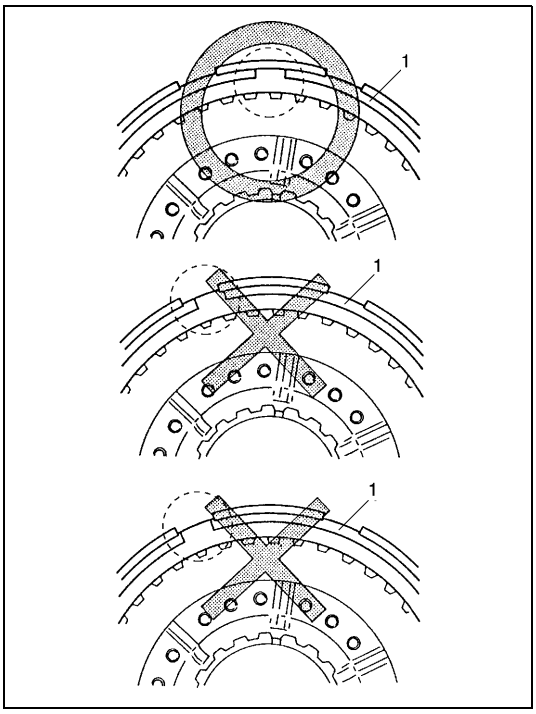

6) Install snap ring (1).

NOTE:

Make sure that the ends of the snap ring do not come to the opening of the front clutch No.1 drum.

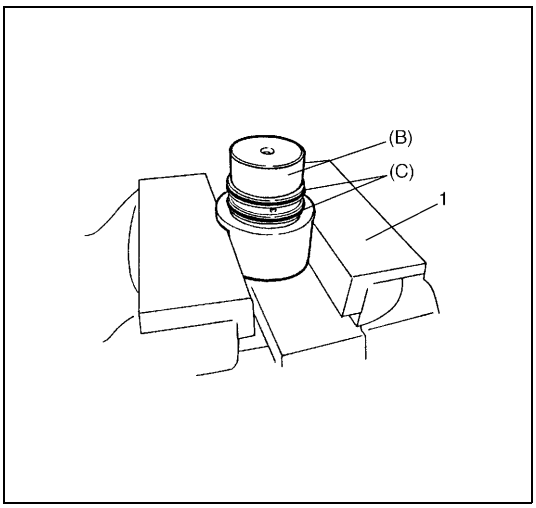

7) Place special tool (B) on soft jawed vise (1) and install 2 oil seal rings on special tool.

Special tool
(B) : 09926-26030
SUZUKI GENUINE PARTS
(C) : Clutch oil seal set 22860-81AT0

NOTE:

- **Clutch oil seal set has two oil seal rings in a set.**
- **Do not use the oil seal rings removed from oil pump assembly. It is not necessary to remove oil seal rings from special tool once installed.**

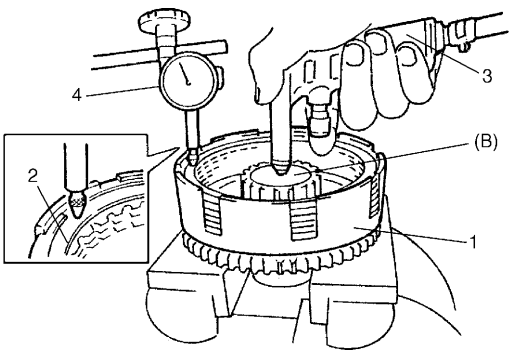

8) Place front clutch assembly (1) on special tool (B).
9) Set dial gauge (4) on the top of clutch flange (2) and measure clearance by blowing compressed air (4 kg/cm^2, psi) as shown in figure.

Front clutch disc clearance
0.65 – 1.20 mm (0.026 – 0.047 in.)

If the clearance is out of specification, use clutch flange of different, thickness to match the clearance to specification. Follow 5 types of clutch flanges are available as spare parts.

Available clutch flange thickness
2.750 mm (0.108 in.)
2.875 mm (0.113 in.)
3.000 mm (0.118 in.)
3.125 mm (0.123 in.)
3.250 mm (0.128 in.)
3.375 mm (0.133 in.)
3.500 mm (0.138 in.)

3. Air gun

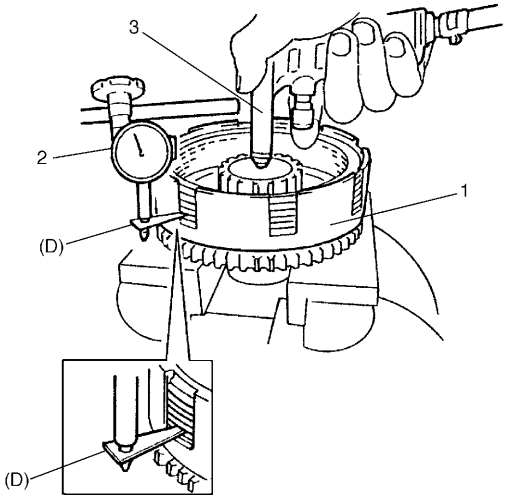

10) Attach special tool (D) to dial gauge (2) and set them on the lowest clutch plate.

Special tool
(D) : 09952-06010

Measure piston stroke by blowing compressed air (4 kg/cm^2, 56.9 psi) as shown in figure.
If the piston stroke is out of specification, use clutch flange of different thickness to match the piston stroke to specification. Following 7 types of clutch flanges are available as spare parts.

Front clutch piston stroke
0.95 – 1.20 mm (0.037 – 0.047 in.)

Available clutch flange thickness
2.750 mm (0.108 in.)
2.875 mm (0.113 in.)
3.000 mm (0.118 in.)
3.125 mm (0.123 in.)
3.250 mm (0.128 in.)
3.375 mm (0.133 in.)
3.500 mm (0.138 in.)

1. Front clutch assembly
3. Air gun

Rear clutch (C2 clutch)

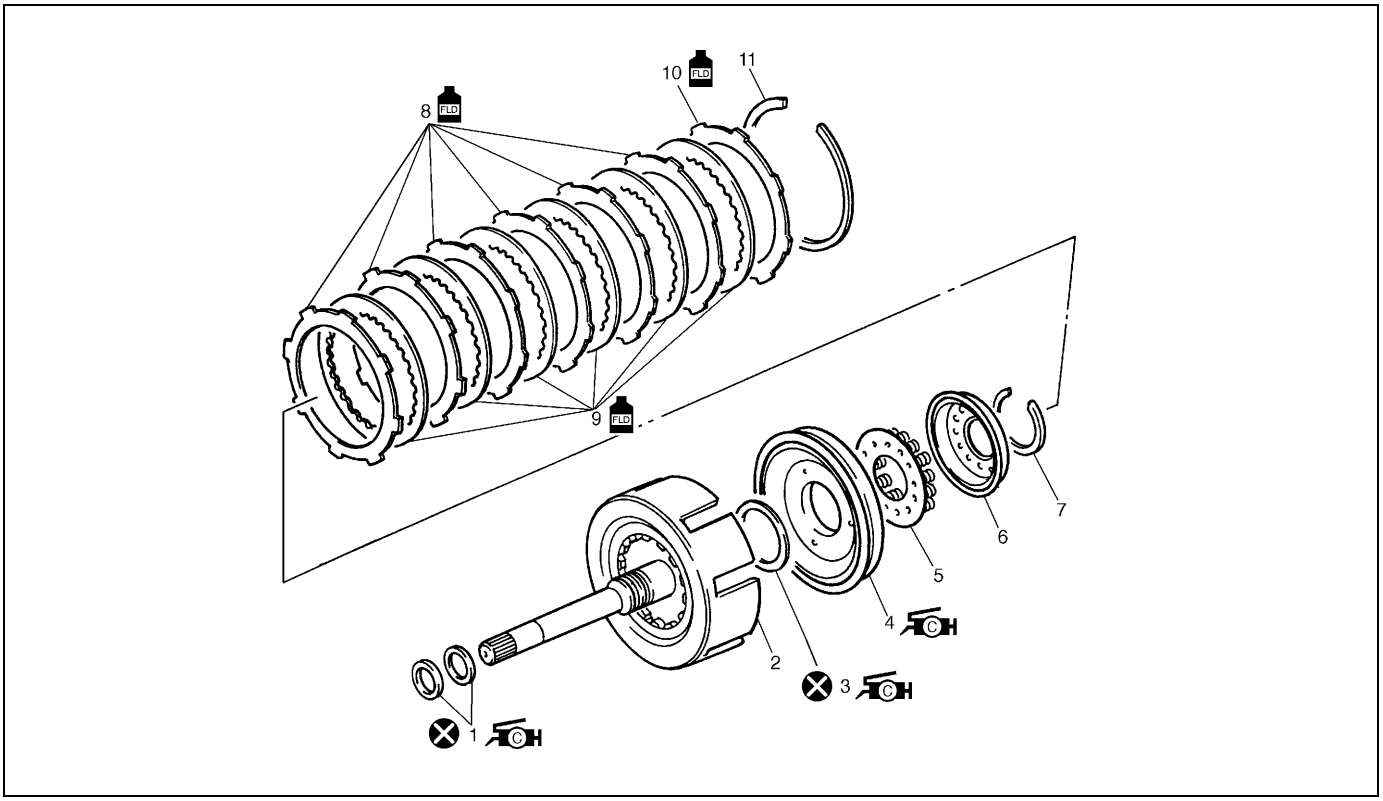

C H	1. Input shaft oil seal ring : Apply grease 99000-25030 to all over surface.		8. Clutch plate
	2. Input shaft subassembly		9. Clutch disc
C H	3. D-ring : Apply grease 99000-25030 to all over surface.		10. Clutch flange
C H	4. Rear clutch piston : Apply grease 99000-25030 to the lip of the piston.		11. Snap ring
	5. Rear clutch return spring seat	FLD	Apply automatic transmission fluid.
	6. Rear clutch balancer	⊗	Do not reuse.
	7. Shaft snap ring		

DISASSEMBLY

1) Remove snap ring.
2) Remove flange (1), discs and plates.

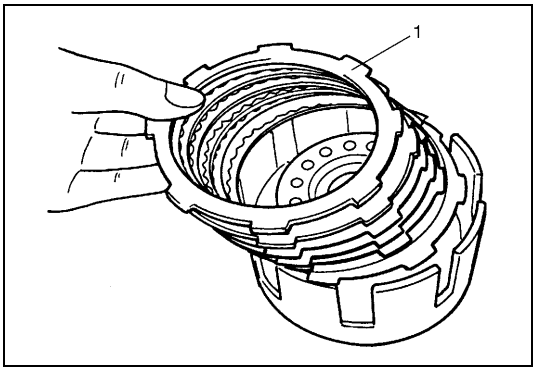

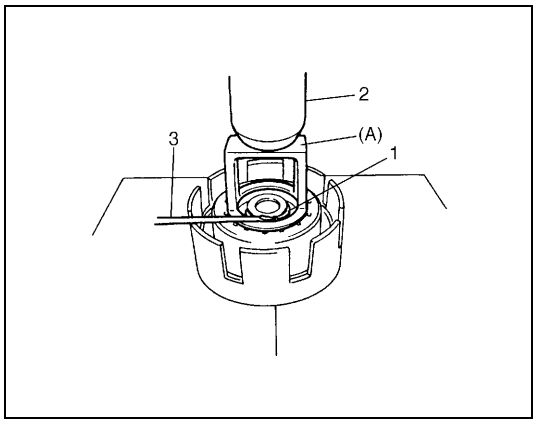

3) Remove shaft snap ring (1).
   Compress piston return springs and remove shaft snap ring. Place special tool (clutch spring compressor) on spring seat and compress spring with a press (2), and then remove shaft snap ring, using a screwdriver (3).

CAUTION:
Do not push down return spring more than necessary.

Special tool
(A) : 09926-96020

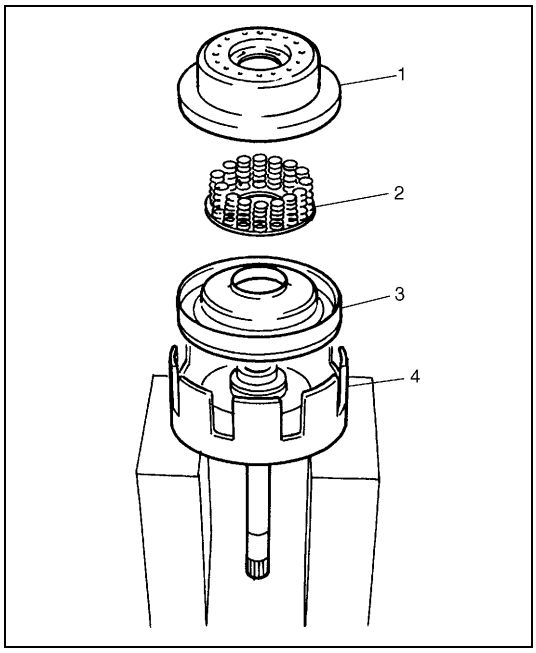

4) Remove rear clutch balancer (1) and rear clutch return spring seat (2).
5) Remove rear clutch piston (3).
   If piston does not pop out, blow compressed air through input shaft oil hole to remove piston.
6) Remove D-ring, and oil seals from input shaft subassembly (4).

INSPECTION

Clutch Discs, Plates and Flange

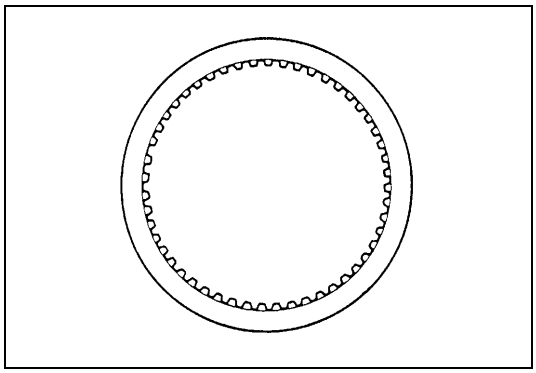

Check that sliding surfaces of discs, plates and flanges are not worn or burnt. If necessary, replace.

NOTE:
- **If disc lining is exfoliated or discolored, replace all discs.**
- **Before assembling new discs, soak them in A/T fluid for at least two hours.**

Rear Clutch Return Spring Seat

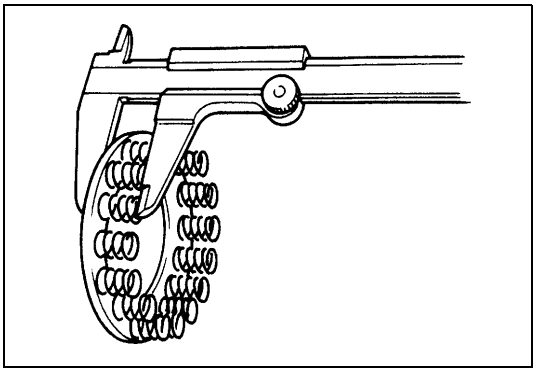

Measure height of overdrive clutch return spring.

Height of overdrive clutch return spring
28.14 mm (1.108 in.)

NOTE:

- **Do not apply excessive force when measuring spring height.**
- **Perform measurement at several points.**

ASSEMBLY

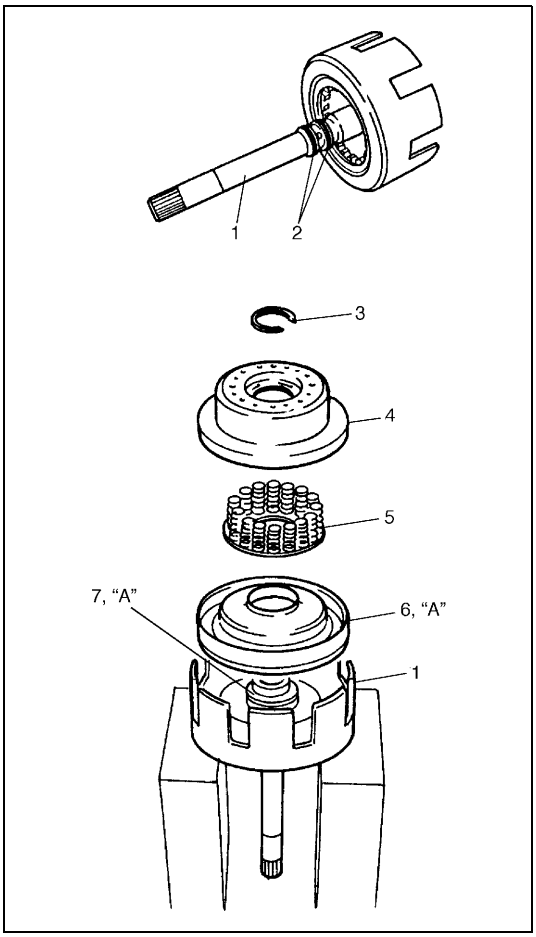

1) Install new D-ring (7) and oil seals (2) to input shaft subassembly.
   Apply grease to D-ring and fit it to input shaft subassembly (1).

“A” : Grease 99000-25030

2) Install piston (6) into input shaft subassembly.
   Apply grease to the lip of the piston.

“A” : Grease 99000-25030

Use care that the lip does not get twisted or caught.

3) Install rear clutch return spring seat (5) and rear clutch balancer (4).

3. Snap ring

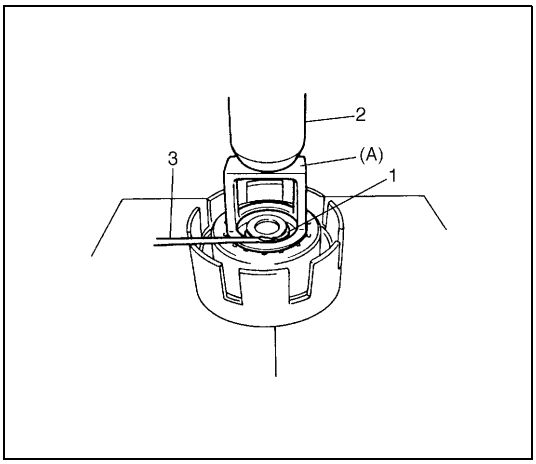

4) Install shaft snap ring (1).
   Compress return springs and install shaft snap rings in groove by using a screwdriver (3).
   Place special tool (clutch spring compressor) on spring seat and compress springs with a press (2).

CAUTION:
Do not compress return spring more than necessary.

Special tool
(A) : 09926-96020

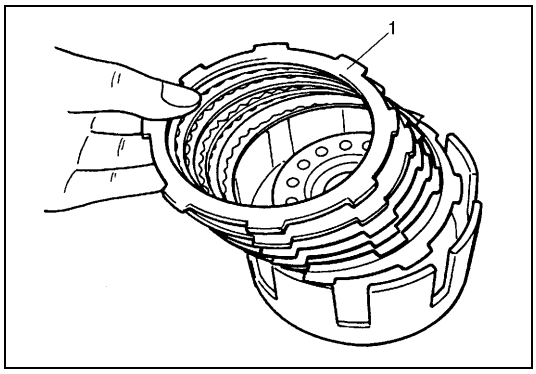

5) Install discs, plates and flange (1) in following order.
   1) Plate → 2) Disc → 3) Plate → 4) Disc → 5) Plate → 6) Disc → 7) Plate → 8) Disc → 9) Plate → 10) Disc → 11) Plate → 12) Disc → 13) Flange

NOTE:

Before assembly, new discs should be soaked in automatic transmission fluid for at least 2 hours

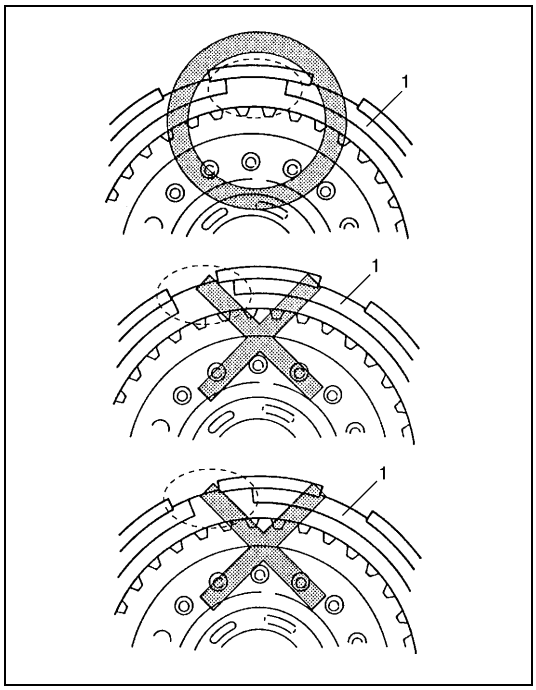

6) Install snap ring (1).

NOTE:

Make sure that the ends of the snap ring do not come to the opening of the input shaft subassembly.

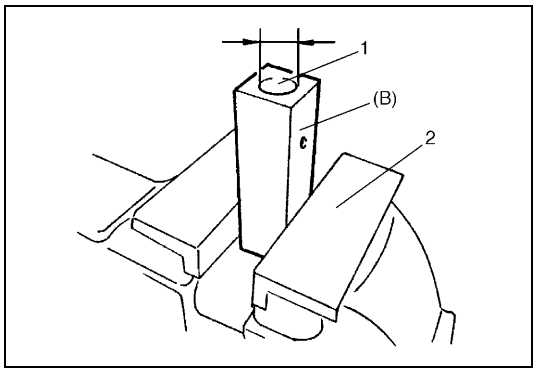

7) Place special tool (B) on soft jawed vise (2) with wider opening (1) facing up.

Special tool
(B) : 09926-26040

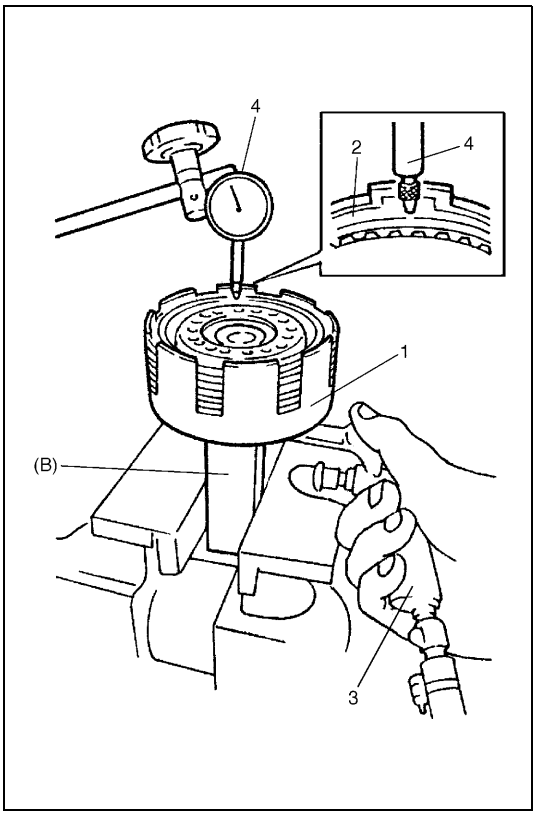

8) Place rear clutch assembly (1) on special tool (B).
9) Set dial gauge (4) on the top of clutch flange (2) and measure clearance by blowing compressed air (4 kg/cm^2, psi) as shown in figure.

Rear clutch disc clearance
: 1.10 – 1.85 mm (0.051 – 0.073 in.)

If the clearance is out of specification, use clutch flange of different thickness to match the clearance to specification. Follow 5 types of clutch flanges are available as spare parts.

Available clutch flange thickness
2.750 mm (0.108 in.)
2.900 mm (0.114 in.)
3.050 mm (0.120 in.)
3.200 mm (0.126 in.)
3.350 mm (0.132 in.)
3.500 mm (0.138 in.)
3.650 mm (0.144 in.)

3. Air gun

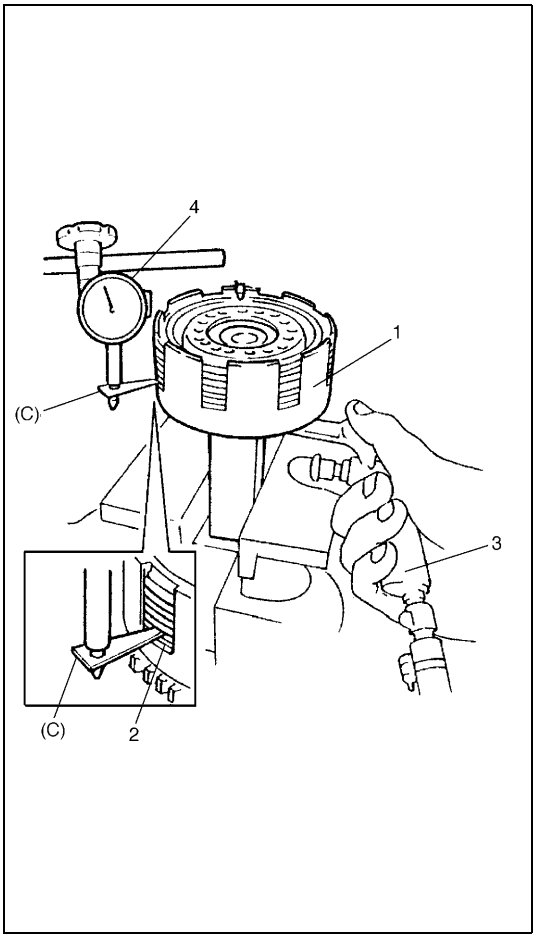

10) Attach special tool (C) to dial gauge (4) and set them on the lowest clutch plate (2).

Special tool
(C) : 09952-06010

Measure piston stroke by blowing compressed air (4 kg/cm^2, psi) as shown in figure.

Rear clutch piston stroke
: 1.60 – 1.85 mm (0.063 – 0.073 in.)

If the piston stroke is out of specification, use clutch flange of different thickness to match the piston stroke within specification. Following 7 types of clutch flanges are available as spare parts.

Available clutch flange thickness
2.750 mm (0.108 in.)
2.900 mm (0.114 in.)
3.050 mm (0.120 in.)
3.200 mm (0.126 in.)
3.350 mm (0.132 in.)
3.500 mm (0.138 in.)
3.650 mm (0.144 in.)

1. Rear clutch assembly
3. Air gun

Planetary set

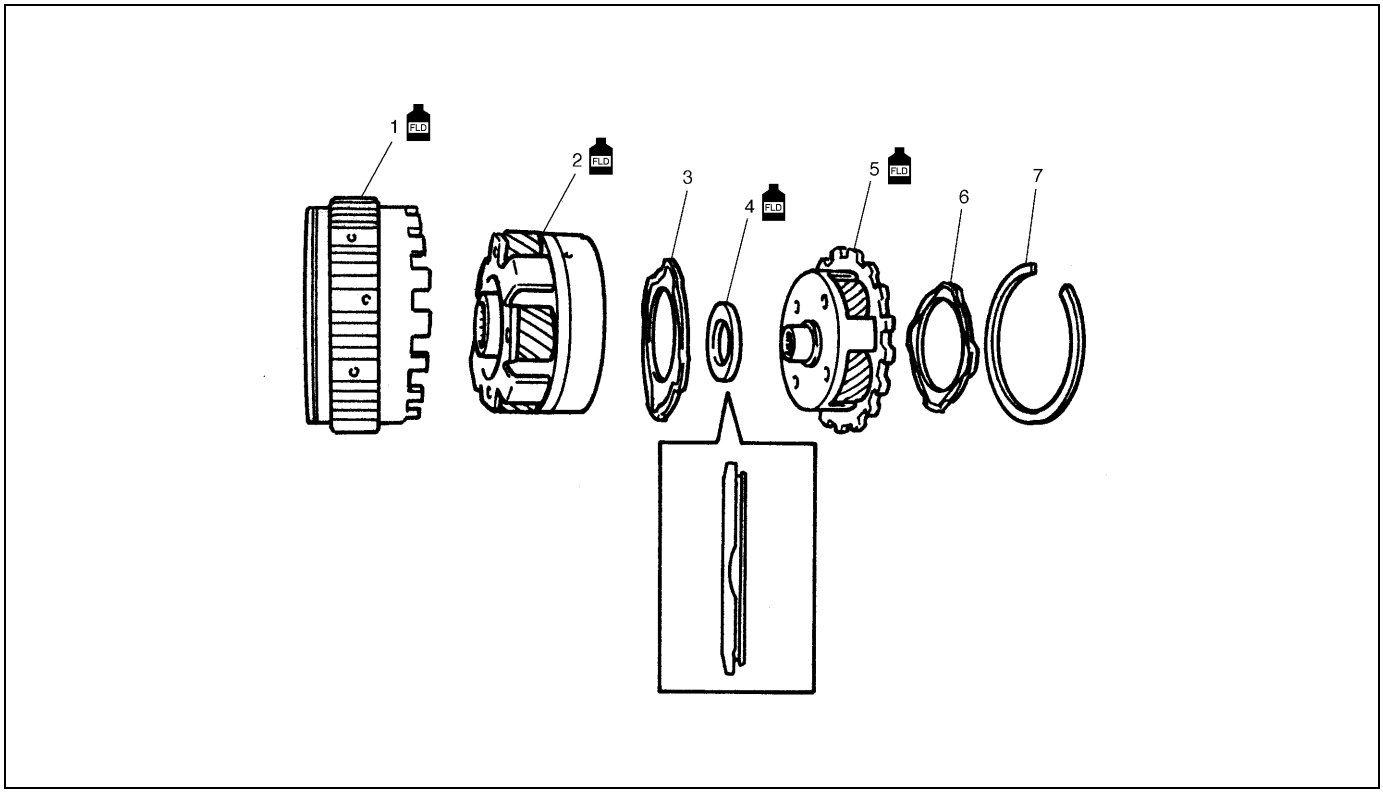

1. Rear ring gear	4. Thrust needle roller bearing	7. Snap ring
2. Rear carrier assembly	5. Front carrier assembly	Apply automatic transmission fluid.
3. Planetary oil receiver No.2	6. Planetary oil receiver No.1	

DISASSEMBLY

1) Remove snap ring.
   Remove front carrier assembly.
2) Remove planetary oil receiver No.1 from rear carrier assembly.
3) Remove rear carrier assembly.
4) Remove needle roller bearing and planetary oil receiver No.2 from planetary gear assembly No.2.

INSPECTION

Planetary Oil Receiver No.1 and No.2

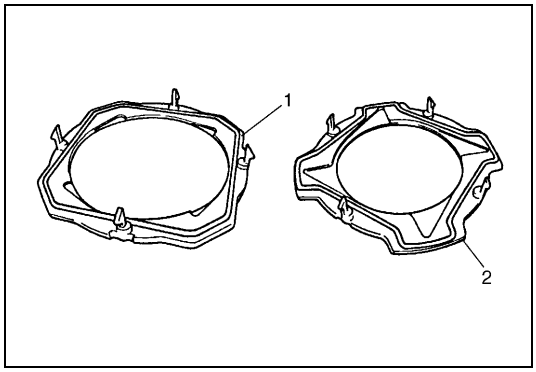

Inspect the seal and the claw for deterioration, damage or cut. If found faulty, replace.

1. Planetary oil receiver No.1
2. Planetary oil receiver No.2

ASSEMBLY

Reverse removal procedure for installation noting following points.

- Note the direction of needle roller bearing.
- Take care not to break the claw of oil receiver.
- Oil receiver has installation position.
  Make sure that all claws are aligned with holes before inserting them.

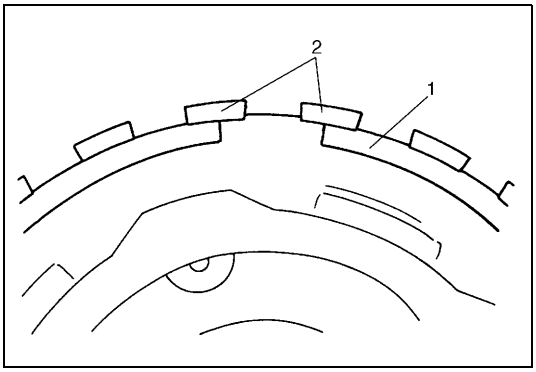

- Note the location of the ends of the snap ring (1).

2. Planetary ring gear No.2

Valve body

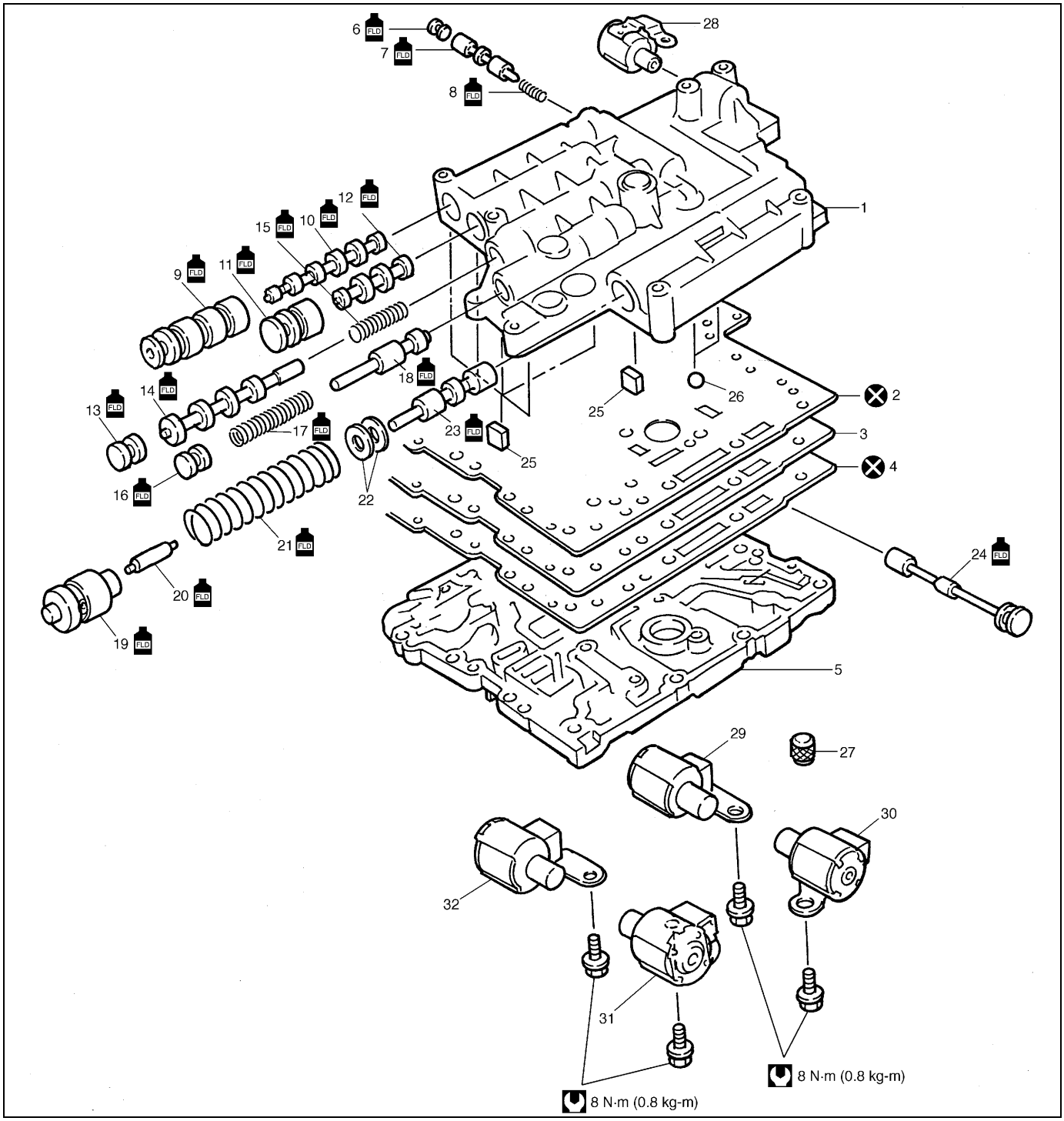

1. Upper valve body	13. Plug	25. Key
2. Gasket for upper valve body	14. Lock-up control valve	26. Steel ball
3. Valve body plate	15. Lock-up control valve spring	27. Oil strainer
4. Gasket for lower valve body	16. Plug	28. Shift solenoid valve No.2
5. Lower valve body	17. Secondary regulator valve spring	29. Shift solenoid valve No.4
6. Plug	18. Secondary regulator valve	30. Shift solenoid valve No.3
7. Signal valve	19. Primary regulator valve sleeve	31. Shift solenoid valve No.1
8. Signal valve spring	20. Primary regulator valve plunger	32. Lock-up solenoid valve
9. Fail valve No.1 sleeve	21. Primary regulator valve spring	Apply automatic transmission fluid.
10. Fail valve No.1	22. Washer plate	Do not reuse.
11. Fail valve No.2 sleeve	23. Primary regulator valve	Tightening torque
12. Fail valve No.2	24. Manual valve	

DISASSEMBLY

Valve Body Assembly

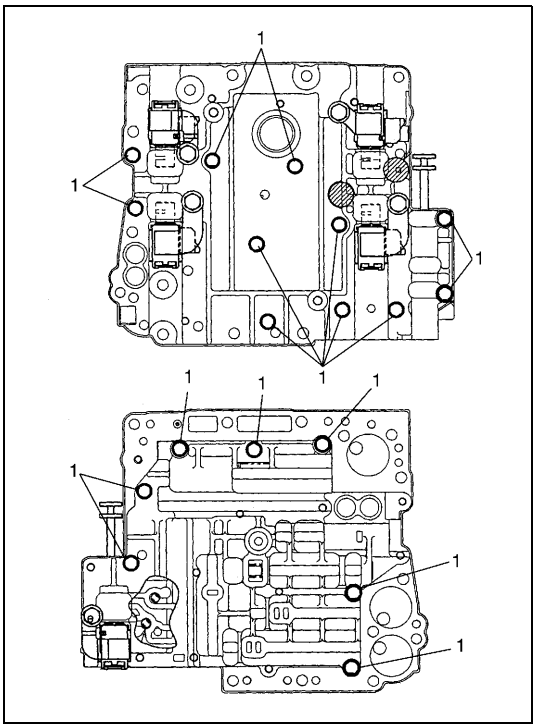

1) Remove manual valve.
2) Remove 18 bolts (1) from lower valve body.

NOTE:

- **There are 4 different kinds of bolt fixing upper and lower valve body. Do not mix them up and remember where they belong to.**
- **When separating lower and upper valve body, be careful not to let the steel ball to fall off.**

Upper Valve Body

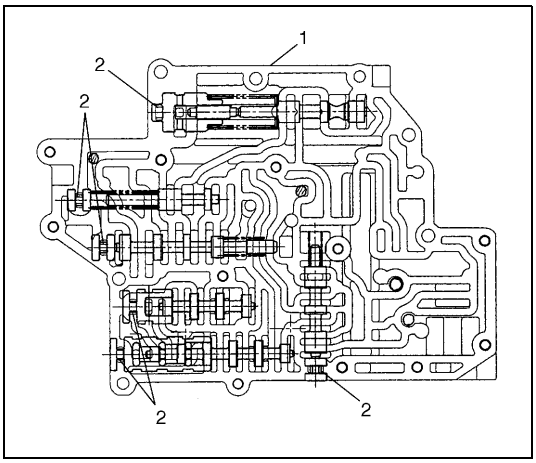

1) Remove shift solenoid No.2.
2) Remove sleeves, springs, washers, plunger and valves by removing keys (2).
3) Remove oil strainer.

1. Upper valve body

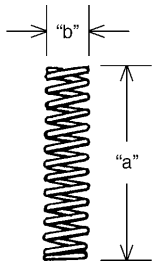

Valve spring dimensions (Reference)

Spring	Color of Paint	Free length "a"	Outside diameter "b"
Primary regulator valve	Yellow	66.9 mm (2.633 in.)	16.0 mm (0.630 in.)
Signal valve	Blue	20.5 mm (0.807 in.)	6.2 mm (0.244 in.)
Lock-up control valve	–	29.5 mm (1.161 in.)	8.8 mm (0.346 in.)
Second-ary regu-lator valve	Blue	38.7 mm (1.524 in.)	8.8 mm (0.346 in.

Lower Valve Body

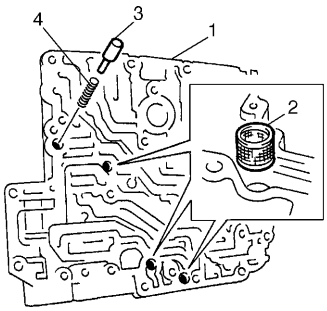

1) Remove oil strainer (2), bypass valve (3) and spring (4).

1. Lower valve body

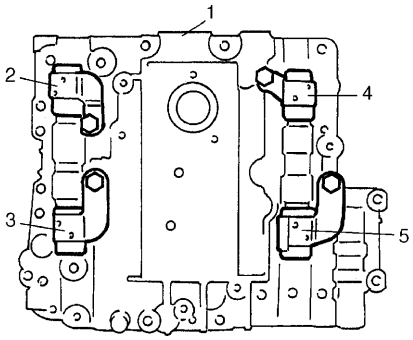

2) Remove solenoid valves.

1. Lower valve body
2. Solenoid valve No.1
3. Lock-up control valve
4. Solenoid valve No.3
5. Solenoid valve No.4

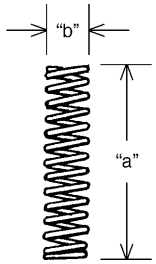

Cooler bypass valve spring dimensions (reference)
Free length "a" : 22.8 mm (8.98 in.)
Outside diameter "b" : 8.0 mm (0.31 in.)

ASSEMBLY

Lower Valve Body

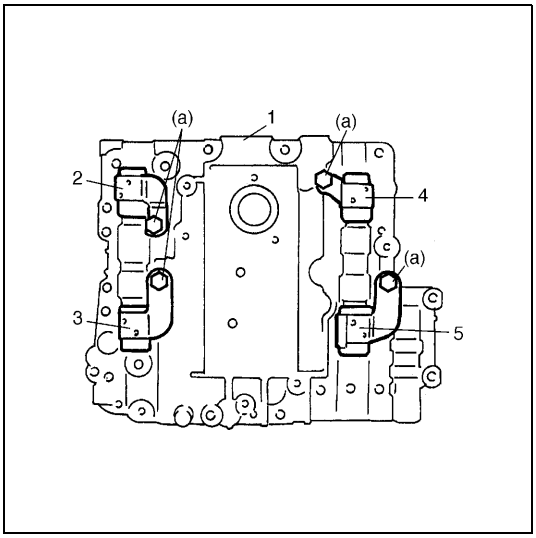

1) Install solenoid valves.

Tightening torque
Solenoid valve bolt
(a) : 8 N·m (0.8 kg-m, 6.0 lb-ft)

NOTE:

Solenoid valve No.1 and No.2 are the same solenoid valve.

1.	Lower valve body
2.	Solenoid valve No.1
3.	Lock-up solenoid valve
4.	Solenoid valve No.3
5.	Solenoid valve No.4

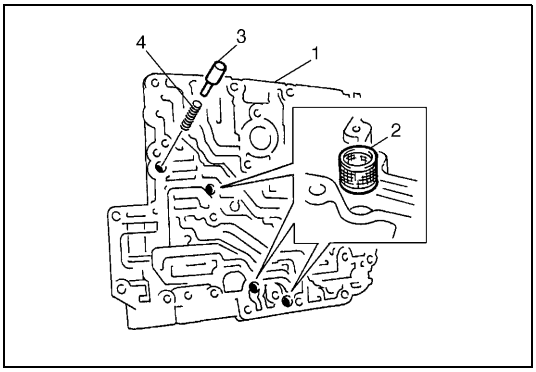

2) Insert oil strainers (2) and bypass valve (3) to lower valve body (1).

NOTE:

Clean oil strainer before installing.

4.	Spring

Upper Valve Body

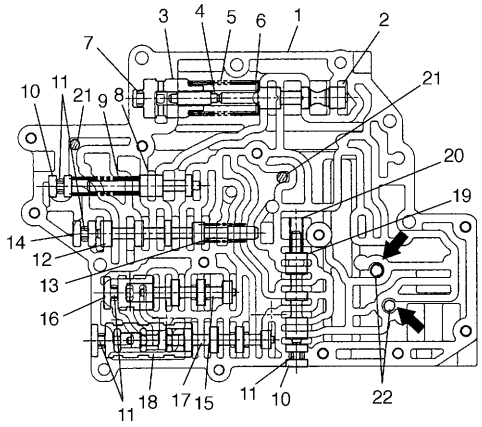

1) Apply A/T fluid to each valve, plate washer, spring, plunger, sleeve and key.
   Insert valves, plate washers, springs, sleeves and plunger referring to “Valve Body” in this section and hold them with keys as shown in the figure.

NOTE:

- **Note the location of the key shown in picture.**
- **Each compression spring has an identification color paint.**
- **Note the direction of each valve.**

2) Install solenoid valve No.2.

Tightening torque
Solenoid valve bolt: 8 N·m (0.8 kg-m, 6.0 lb-ft)

3) Install oil strainer and steel ball.

1. Upper valve body	12. Lock-up control valve
2. Primary regulator valve	13. Compression spring
3. Primary regulator valve sleeve	14. Plug
4. Primary regulator valve plunger	15. Fail valve No.2
5. Compression spring (yellow-painted)	16. Fail valve No.2 sleeve
6. Plate washer	17. Fail valve No.1
7. Key	18. Fail valve No.1 sleeve
8. Secondary regulator valve	19. Signal valve
9. Compression spring (blue-painted)	20. Compression spring (blue-painted)
10. Plug	21. Oil strainer
11. Key	22. Steel ball

Valve Body Assembly

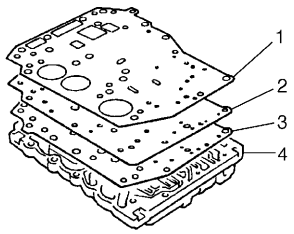

1) Install gasket for upper valve body, valve body plate (2) and gasket for lower valve body to upper valve body (4).

NOTE:

Make sure that steel balls and oil strainers are installed at proper location. Refer to “Upper Valve Body Assembly” for steel ball location.

1. Gasket (for lower valve body)
3. Gasket (for upper valve body)

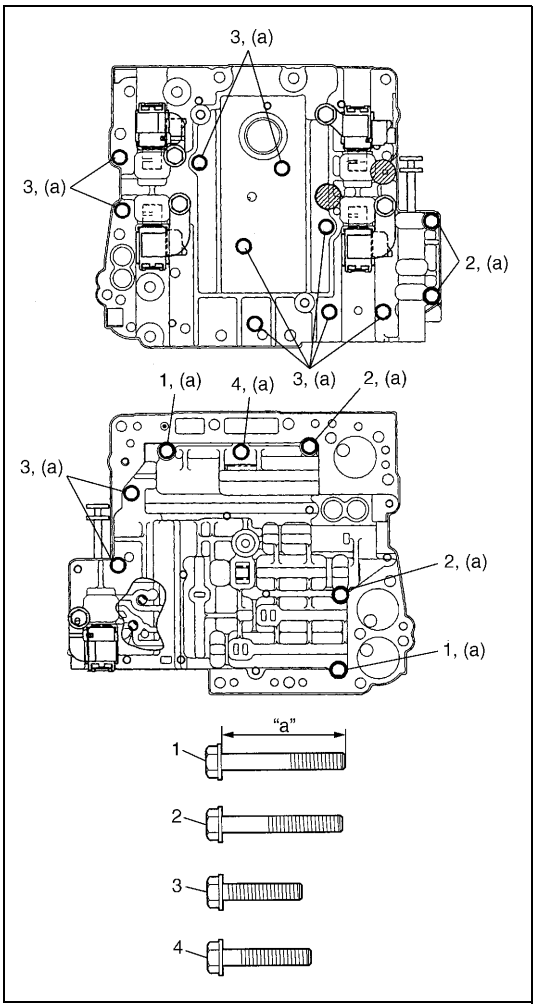

2) Assemble upper valve body with gaskets and plate to lower valve body. Make sure that bypass valve is installed to lower valve body before assembly.

Tightening torque
Valve body assembly bolts (a) : 5.5 N·m (0.55 kg-m, 4.0 lb-ft)

NOTE:

There are four kinds of bolts fixing upper and lower valve body. Refer to the table below for the bolt specifications.

Bolt	Length "a"	Pieces
A	41.0 mm (1.61 in.)	2
B	38.0 mm (1.50 in.)	4
C	23.0 mm (0.91 in.)	11
D	29.5 mm (1.16 in.)	1

1. Bolt A	3. Bolt C
2. Bolt B	4. Bolt D

3) Install manual valve to valve body assembly.

Output shaft assembly

DISASSEMBLY

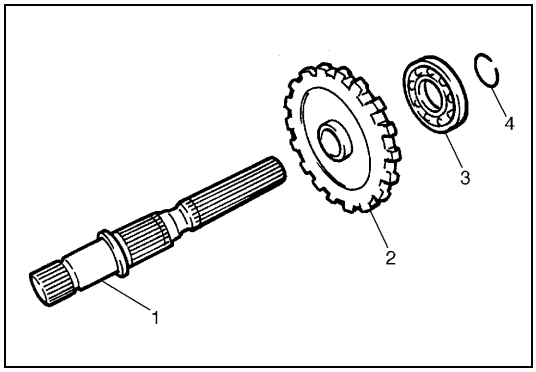

1) Remove circlip (4) and pull out output shaft (1) from parking gear assembly (2).

3. Bearing

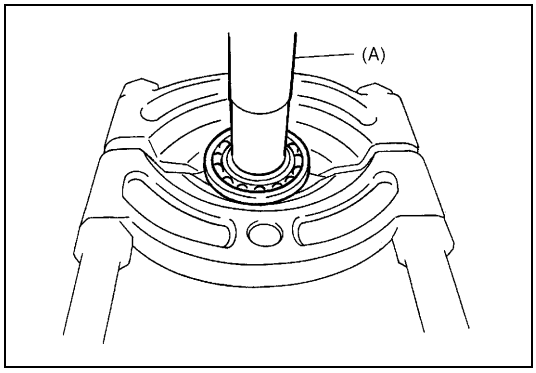

2) Pull out bearing from parking gear by using puller and hydraulic press.

Special tool
(A) : 09913-80112

ASSEMBLY

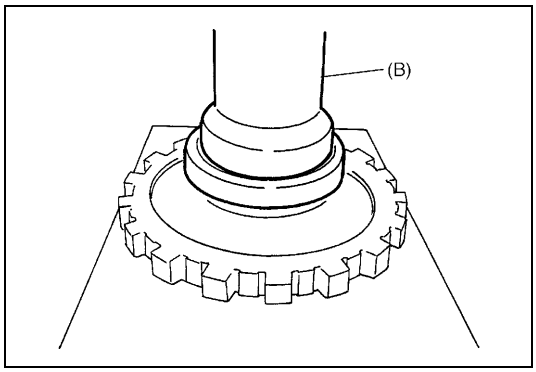

Reverse disassembly procedure noting following point.

- Press-fit bearing by using press and special tool

Special tool
(B) : 09913-76010

Unit Assembly

CAUTION:

- **Automatic transmission consists of highly precise parts. As even a flaw in a small part may cause oil leakage or decrease in function, check each part carefully before installation.**
- **Clean all parts with compressed air. Never use wiping cloths or rags.**
- **Before assembling new clutch discs and brake discs, soak them in automatic transmission fluid for at least 2 hours.**
- **Be sure to use new gaskets and O-rings.**
- **Lubricate O-rings with automatic transmission fluid.**
- **Apply automatic transmission fluid on sliding or rotating surfaces of the parts before assembly.**
- **Use yellow petrolatum grease or Suzuki Super Grease C to retain parts in place.**
- **Be sure to install thrust bearings and races in correct direction and position.**
- **Make sure that snap ring ends are not aligned with one of cutouts and are installed in groove correctly.**
- **Do not use adhesive cements on gaskets and similar parts.**
- **Be sure to torque each bolt and nut to specification.**

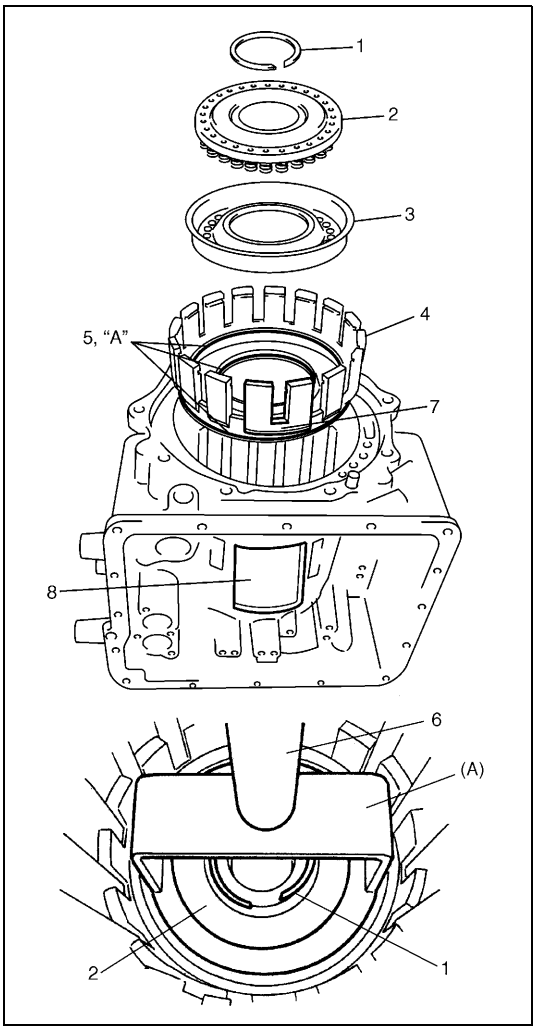

1) Install new O-rings (5) (inside and outside) to B2 brake piston (4), and apply grease to them.

"A": Grease: 99000-25030

2) Install B2 brake piston with two fingers, which have mounded part (7) between them, aligned with transmission case hole (8) as shown in figure.
3) Install B1 brake piston (3) and B1 and B2 return spring assembly (2) to transmission case.
4) Install snap ring (1) by compressing return spring assembly through B2 brake piston seat with hydraulic press (6) and special tool.

NOTE:

Don't compress B1 & B2 return spring assembly more than necessary or it may get damaged.

Special tool
(A): 09926-96010

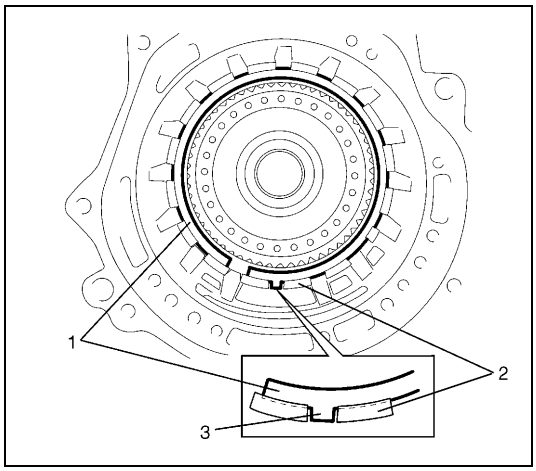

5) Install B1 brake discs, plates and flange to B2 brake piston (2) in following order.
   1) Plate → 2) Disc → 3) Plate → 4) Disc → 5) Plate → 6) Disc → 7) Plate → 8) Disc → 9) Plate → 10) Disc → 11) Flange
6) Install snap ring (1) to B2 brake piston (2) with antirotation protrusion (3) aligned with gap between two fingers having mounded part.

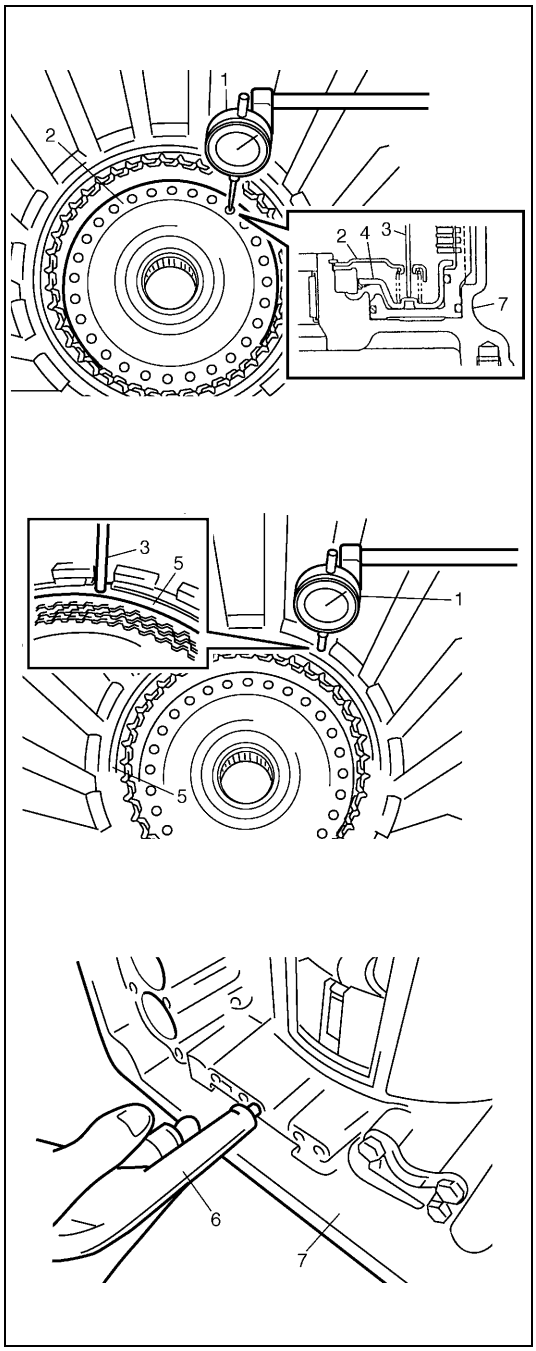

7) Measure B1 brake stroke and clearance in following manner.

B1 Brake Stroke:
Set the dial gauge (1) to 1st & 2nd brake (B1 brake) piston through B1 brake spring seat (2) hole as shown. Blow compressed air into hole shown in figure. Then measure the difference as the compressed air is blown in.

B1 brake piston stroke
Standard : 1.75 – 2.00 mm (0.0689 – 0.0787 in.)

B1 Brake Clearance:
Blow compressed air into the hole shown in figure.
Measure the difference.

B1 brake disc clearance
Standard : 1.30 – 2.00 mm (0.0512 – 0.0787 in.)

If the measured value(s) is (are) out of specification, select the flange from table below and repeat this step until the measured values are within specification.

Available flange thickness
2.875 mm (0.113 in.)
3.050 mm (0.120 in.)
3.225 mm (0.127 in.)
3.400 mm (0.134 in.)
3.575 mm (0.141 in.)

3.	Tip of dial gauge
4.	B1 brake piston
5.	Brake flange
6.	Air gun
7.	Transmission case

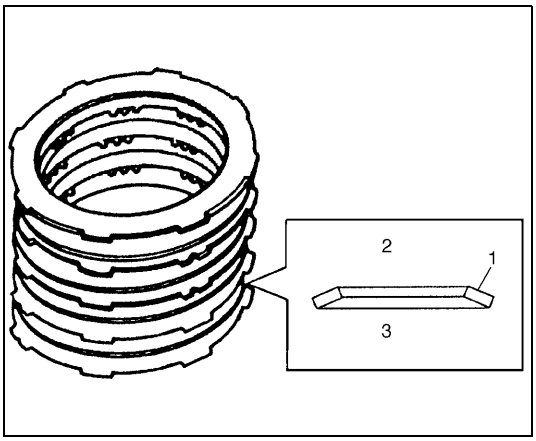

8) Install B2 brake discs, plates and flange in following order.
   1) Plate → 2) Cushion plate → 3) Plate → 4) Disc →
   5) Plate (thick) → 6) Disc → 7) Plate (thick) → 8) Disc →
   9) Flange

NOTE:

Cushion plate (1) has installing direction as shown in figure.

2.	Front
3.	Rear

9) Hold above parts with snap ring.

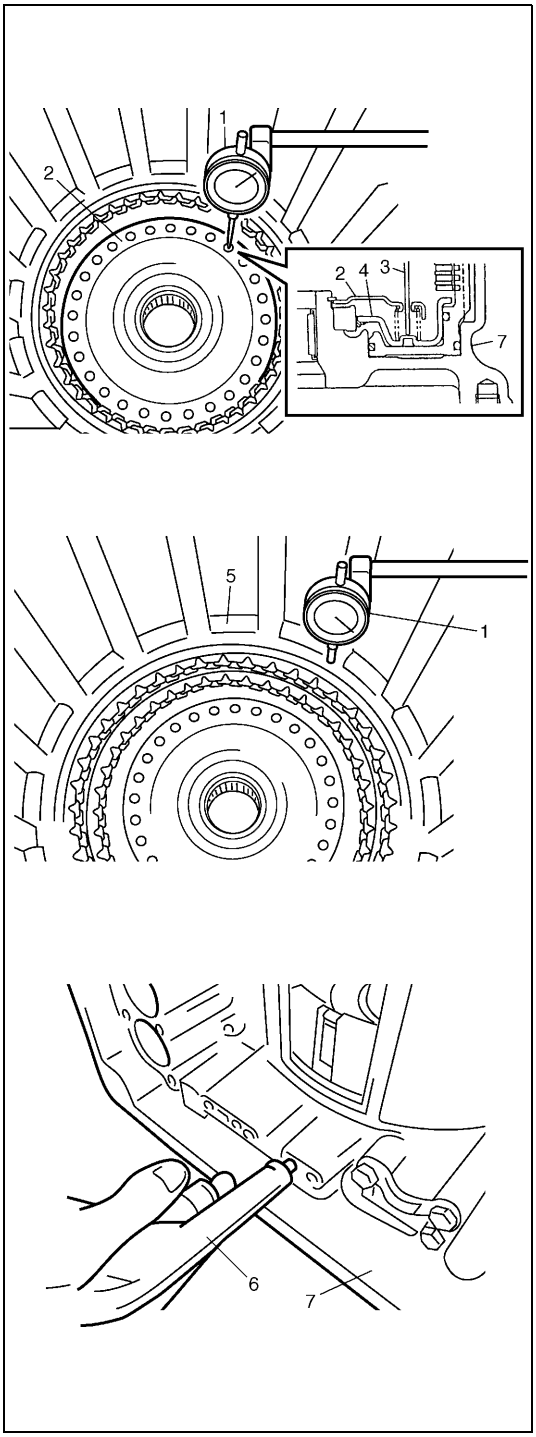

10) Measure B2 brake stroke and clearance in following manner.

B2 Brake Stroke:

Set the dial gauge (1) to reverse brake (B2 brake) piston through B1 brake spring seat (2) hole as shown. Blow compressed air into hole shown in figure. Then measure the difference as the compressed air is blown in.

B2 brake piston stroke
Standard : 2.22 – 2.47 mm (0.0874 – 0.0972 in.)

B2 Brake Clearance:

Blow compressed air into the hole shown in figure.
Measure the difference.

B2 brake disc clearance
Standard : 0.60 – 1.70 mm (0.0236 - 0.0669 in.)

If the measured value(s) is (are) out of specification, select the flange from table below and repeat this step until the measured values are within specification.

Available flange thickness
2.36 mm (0.093 in.)
2.54 mm (0.100 in.)
2.72 mm (0.107 in.)
2.90 mm (0.114 in.)

3.	Tip of dial gauge
4.	B1 brake piston
5.	Brake flange
6.	Air gun
7.	Transmission case

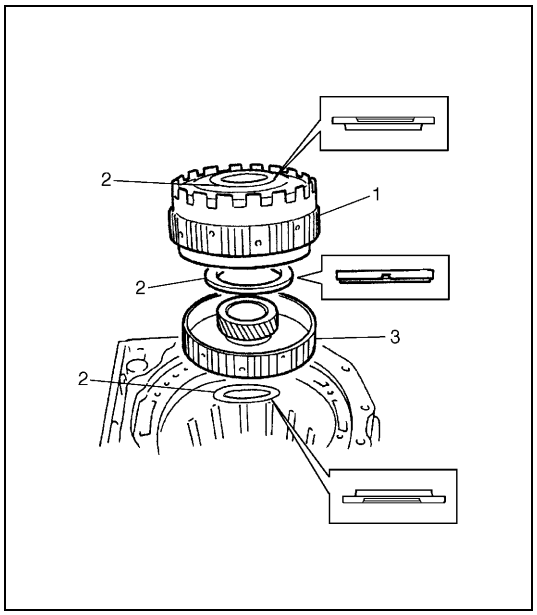

11) Install thrust needle roller bearing (2) and rear sun gear (3). Turn rear sun gear right and left to match the brake discs and the spline of rear sun gear.
12) Install thrust needle roller bearing and planetary set (1). Turn planetary set right and left to match the gears of the rear sun gear and the gears of the planetary set.

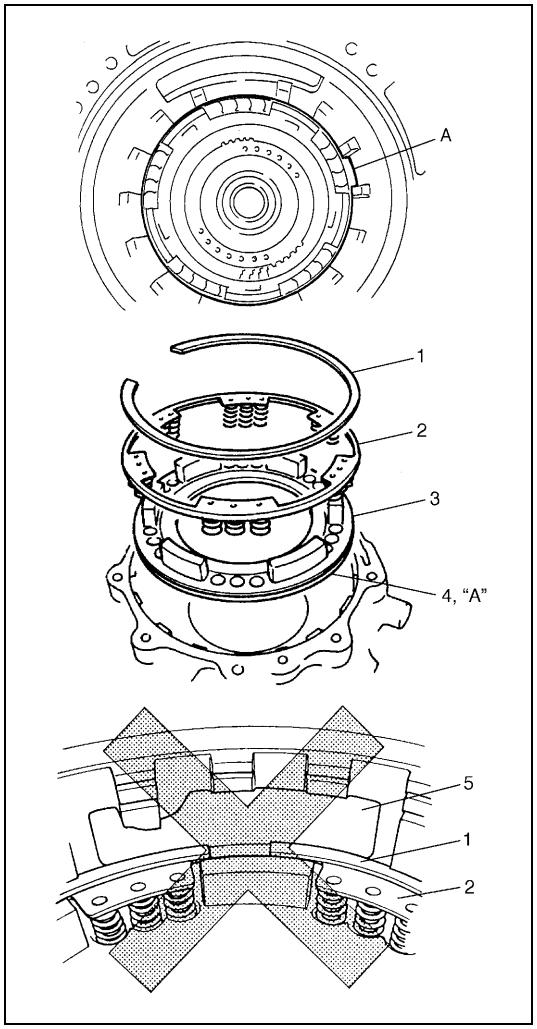

13) Install new inner and outer O-rings (4) to B0 brake piston and apply grease to them.

"A": Grease 99000-25030

Install brake piston to B0 brake drum.

14) Install B0 brake piston & drum assembly to transmission case, in such way that the edge A comes at the position as shown in figure. Make sure that the O-rings are not twisted or caught.
15) Place B0 brake piston return spring subassembly (2) on piston. Make sure that each spring fits the holes on the piston.
16) Push down return spring subassembly and install snap ring (1).

CAUTION:

Check that the opening of snap ring does not face the cored-hole (5) of the transmission case.

3. B0 brake piston

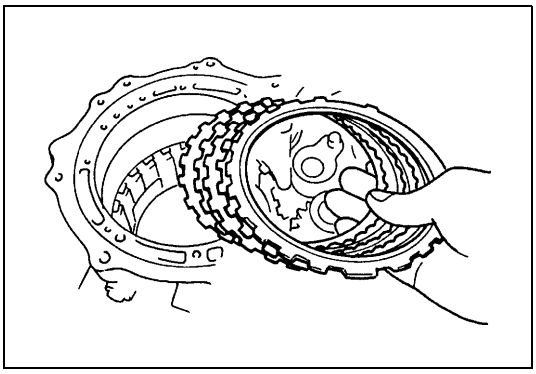

17) Install B0 brake discs, plates and flange in following order.
    1) Plate → 2) Disc → 3) Plate → 4) Disc → 5) Flange

NOTE:

The flat surface of B0 flange must face to B0 disc.

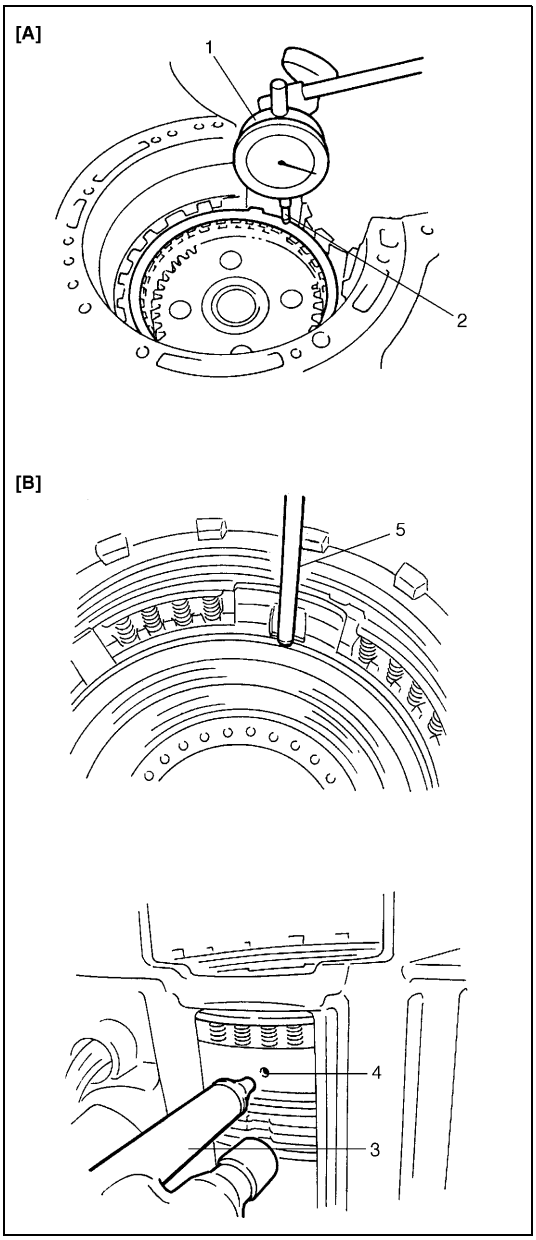

18) Inspect B0 brake piston stroke and clearance by blowing compressed air into hole shown in figure.
    Make sure that the obtained piston stroke and clearance satisfy the standard value.

B0 brake clearance:

Set dial gauge (1) to the top of B0 brake flange and blow compressed air into the hole shown in figure.

B0 brake disc clearance
Standard : 0.50 – 1.05 mm (0.0197 – 0.0413 in.)

B0 piston stroke:

Set dial gauge to the step of B0 brake piston as shown in figure. Blow compressed air into the hole shown in figure and measure the value for piston stroke.

B0 brake piston stroke
Standard : 0.70 – 1.05 mm (0.0275 – 0.0413 in.)

If the measured value(s) is (are) out of specification, select the flange from table below and repeat this step until the measured values are within specification.

Available flange thickness
2.35 mm (0.093 in.)
2.60 mm (0.102 in.)
2.85 mm (0.112 in.)
3.10 mm (0.122 in.)

2.	Tip of dial gauge on B0 brake flange
3.	Air gun
4.	Blow compressed air into this hole
5.	Tip of dial gauge on B0 brake piston
[A]:	Clearance
[B]:	Piston stroke

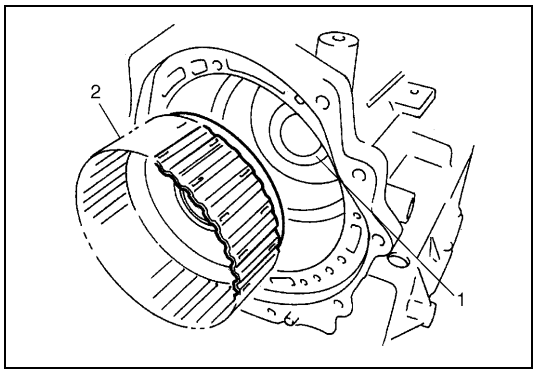

19) Install front sun gear (2) to planetary set.

1. Needle roller bearing

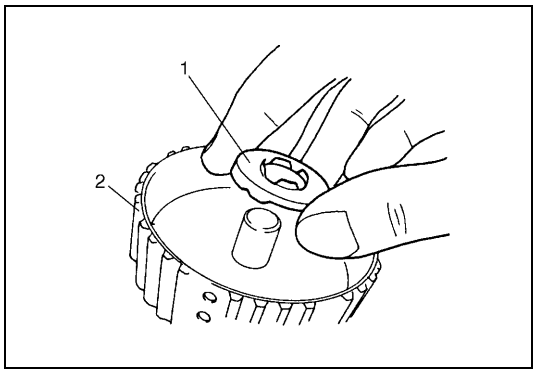

20) Install thrust needle roller bearing (1) to intermediate shaft (2).

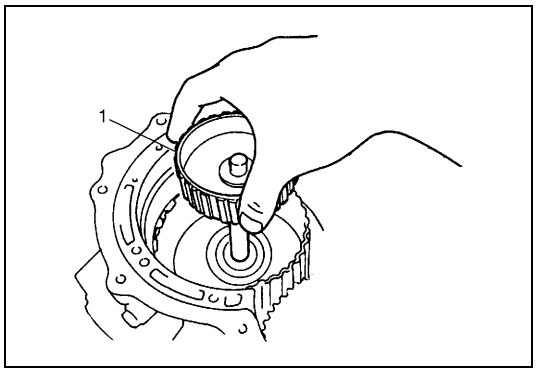

21) Install intermediate shaft (1) to transmission case.

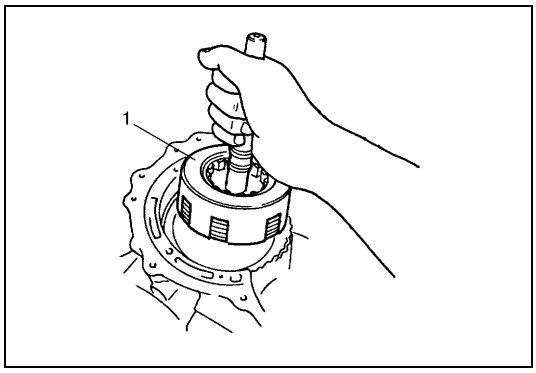

22) Install rear disc clutch assembly (1) by turning it right and left to match the clutch disc of rear disc clutch assembly and the spline of intermediate shaft.

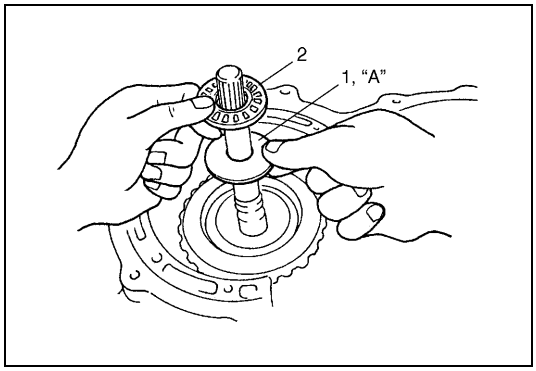

23) Install thrust bearing race (1) and thrust needle roller bearing (2).

“A”: Grease 99000-25030

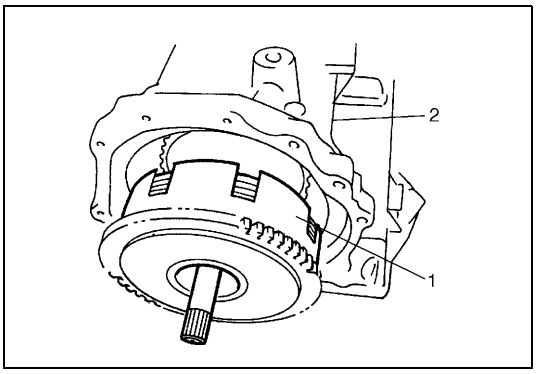

24) Install front disc clutch assembly (1) by turning it right and left to match the clutch disc of front disc clutch assembly and the spline of follow shaft.

2. Transmission case

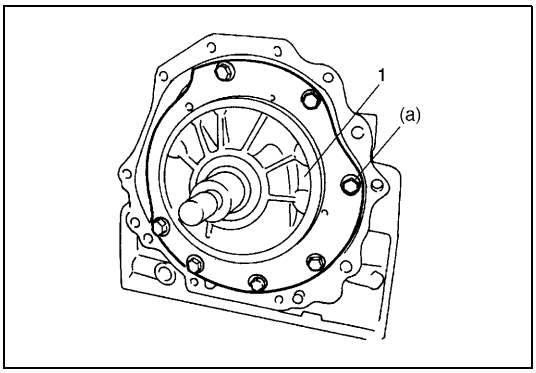

25) Install gasket to transmission case and install oil pump assembly (1) to transmission case.

Tightening torque
Oil pump assembly bolts
(a) : 12 N·m (1.2 kg-m, 8.5 lb-ft)

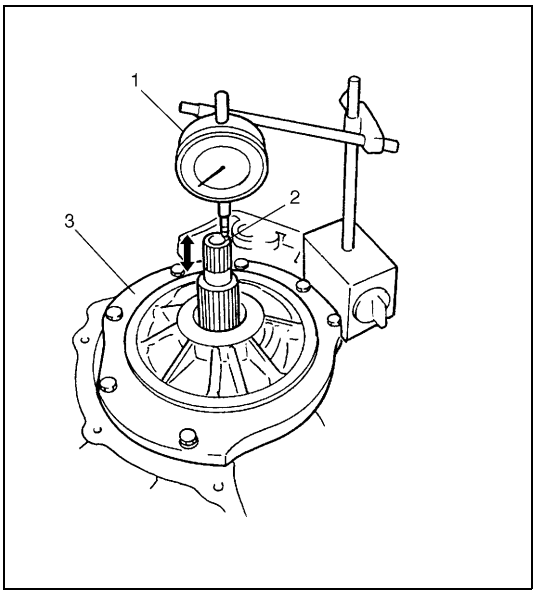

26) Measure input shaft end play.
Set dial gauge (1) as shown in figure and measure the play of the input shaft.

Input shaft end play
Standard : 0.3 – 0.9 mm (0.012 – 0.036 in.)

If the obtained value is out of standard value, select thrust bearing race (installed in step 22) of different thickness shown in table below and adjust the play.

Available thrust bearing race thickness
1.3 mm (0.051 in.)
1.7 mm (0.067 in.)
2.1 mm (0.083 in.)

2. Input shaft end
3. Oil pump

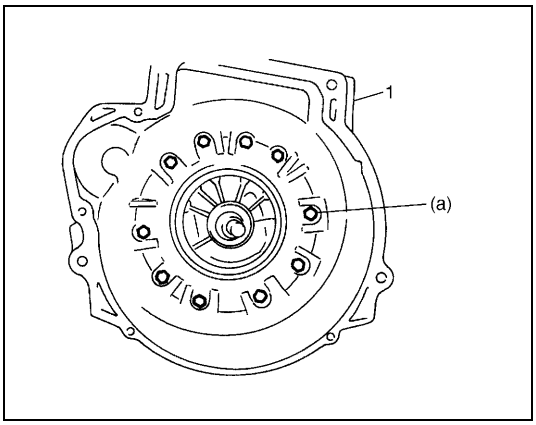

27) Apply grease to oil pump D-ring.
Install new gasket to transmission case and install torque converter housing (1).

Tightening torque
Torque converter housing bolt
(a) : 19 N·m (1.9 kg-m, 14.0 lb-ft)

Grease 99000-25030

NOTE:

Use new bolts.

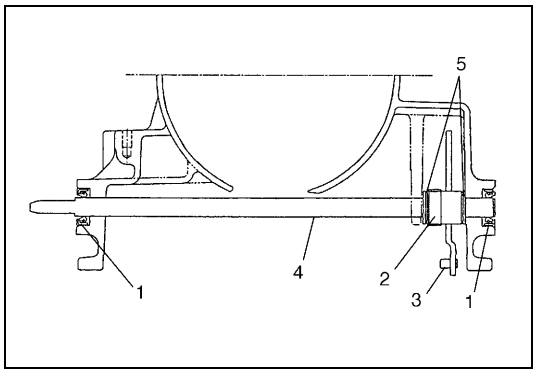

28) Apply grease to lip of new oil seal (1) and drive in oil seal till it contacts with transmission case.
29) After installing new sleeve cover (2) and washers (5) to manual shift lever (3), install manual shift shaft (4) and manual shift lever to transmission case.

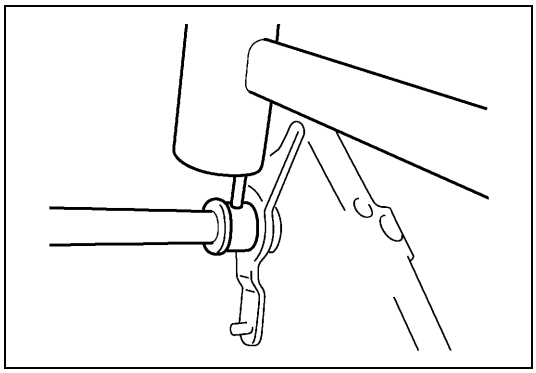

30) Align hole in manual shift shaft with that in manual shift lever and drive in new manual shift lever pin through sleeve cover.

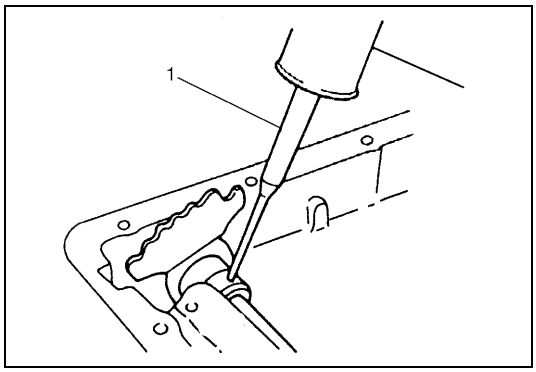

31) Turn sleeve cover by 90° and caulk securely with pin punch (1). Then check that manual shift shaft turns smoothly.

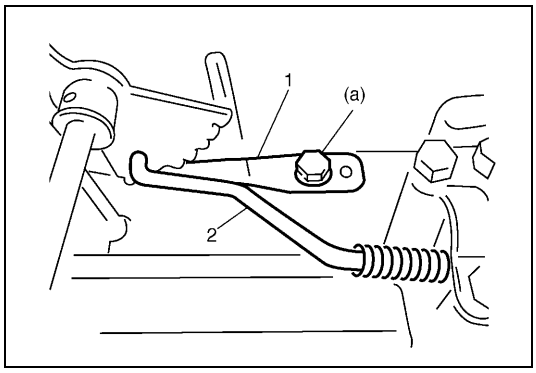

32) Install detent spring (1) and parking rod (2) as shown in figure.

Tightening torque
Detent spring assembly bolt
(a) : 15 N·m (1.5 kg-m, 11.0 lb-ft)

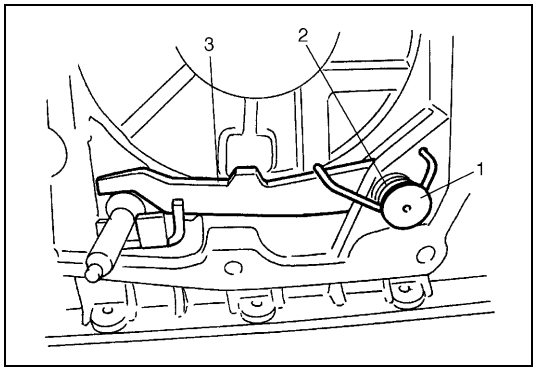

33) Install parking pawl (3), spring (2) and parking pawl shaft (1) as shown in figure.

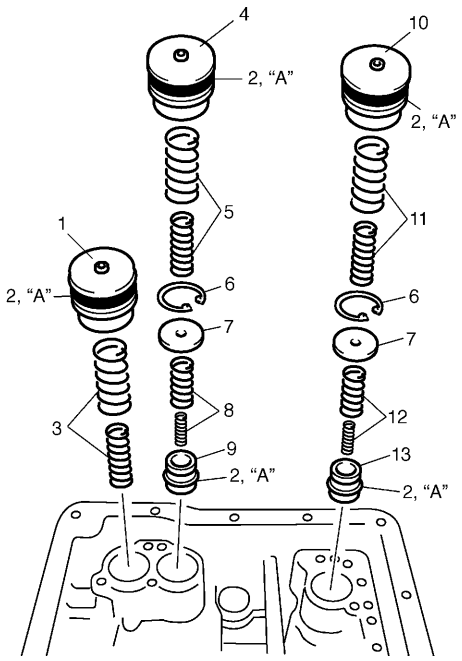

34) Install O-rings to each accumulator piston and apply grease or ATF to them.

“A” : Grease 99000-25030

35) Install B0 accumulator piston, compression spring gray paint and accumulator spacer.
Hold them with snap ring.

NOTE:

- **Make sure that the snap ring is fitted to the groove of B1-B0 accumulator cylinder.**
- **Make sure that the O-ring is not twisted or caught when installing.**

36) Install B1 accumulator spring (with light blue paint) and accumulator piston.

NOTE:

Make sure that the O-ring is not twisted or caught when installing.

1.	C2 accumulator piston (large)
2.	O-ring
3.	C2 accumulator spring (with pink paint)
4.	B1 accumulator piston (with 1 groove)
5.	B1 accumulator spring (with light blue paint)
6.	Snap ring
7.	Accumulator spacer
8.	B0 accumulator spring (with white paint)
9.	B0 accumulator piston
10.	C1 accumulator piston (with 2 grooves)
11.	C1 accumulator spring
12.	C2 accumulator spring (with orange paint)
13.	C2 accumulator piston (small)

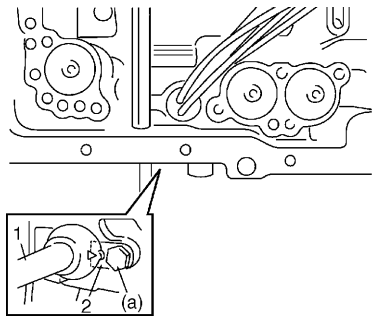

37) Install wire-to-solenoid assembly (1).
Fix it with sleeve lock plate (2) and a bolt.

NOTE:

- **Apply grease to O-ring of wire-to-solenoid assembly.**
- **Match the arrow mark on wire-to-solenoid assembly with the sleeve lock plate.**

Tightening torque
Wire-to-solenoid assembly bolt
(a) : 8.0 N·m (0.8 kg-m, 6.0 lb-ft)

Grease 99000-25030

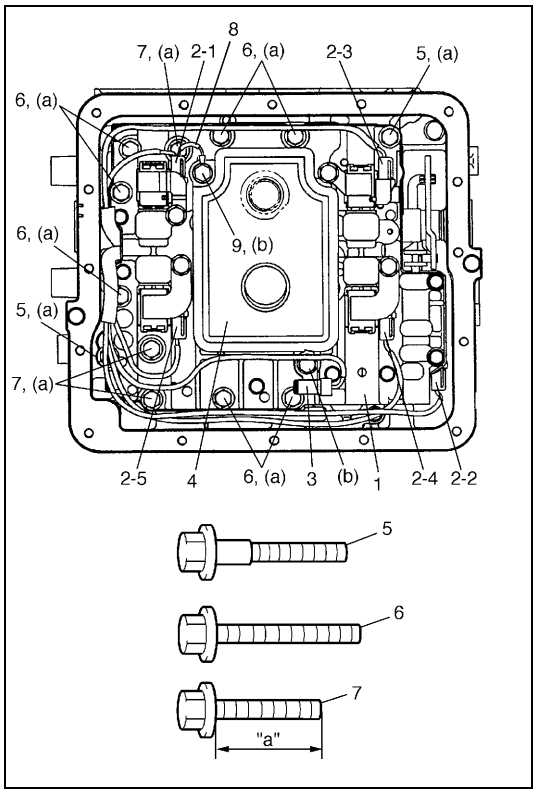

38) Install valve body (1) to transmission case.
First match the pin of the manual valve lever to the slot of the manual valve.

NOTE:

Connect shift solenoid No.2 coupler (green) before tightening bolts.

Tightening torque
Valve body bolts
(a) : 10 N·m (1.0 kg-m, 7.5 lb-ft)

Bolt	Length “a”	Pieces
A	25 mm (0.98 in.)	2
B	25 mm (0.98 in.)	7
C	20 mm (0.79 in.)	3

3. Transmission fluid temp. sensor	7. Bolt C
4. Oil strainer assembly	8. Ground wire
5. Bolt A	9. Oil strainer bolt
6. Bolt B	

39) Connect couplers of wire-to-solenoid to solenoid valves.

Solenoid Valve	Color
No.1	Natural
No.2	Green
No.3	Natural
No.4	Black
Lock-up	Black

2-1. Shift solenoid No.1 coupler
2-2. Shift solenoid No.2 coupler
2-3. Shift solenoid No.3 coupler
2-4. Shift solenoid No.4 coupler
2-5. Lock-up solenoid coupler

40) Install O-ring to oil strainer assembly.
41) Install oil strainer assembly with ground wire for shift solenoid valve No.1 to the top of valve body assembly.
Connect transmission fluid temperature sensor coupler.
Fix transmission fluid temperature sensor and oil strainer assembly with bolts.

Tightening torque
Oil strainer bolts
(b) : 8 N·m (0.8 kg-m, 6 lb-ft)

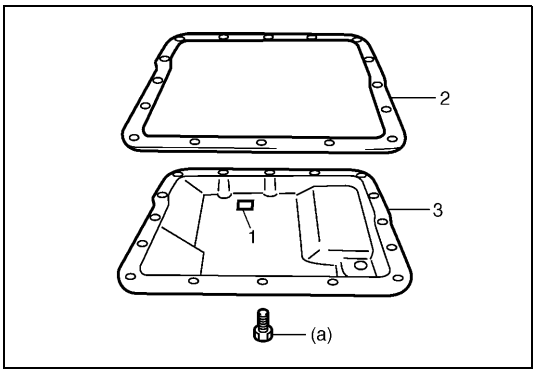

42) Install magnet (1) in oil pan.

NOTE:

If metal particles are attached to the magnet, clean them before installing.

43) Install gasket (2) to transmission case and install oil pan (3).

Tightening torque
A/T oil pan bolts
(a) : 7.5 N·m (0.75 kg-m, 5.5 lb-ft)

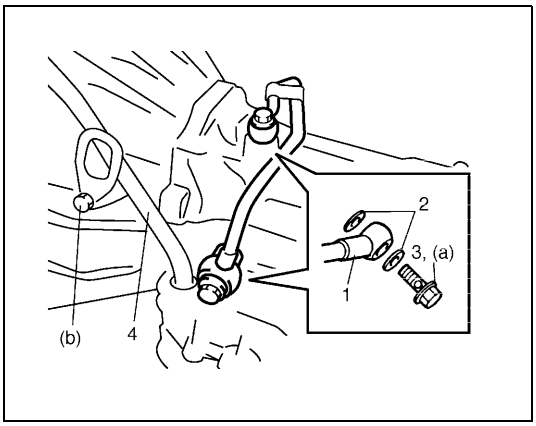

44) Install oil cooler pipe (1) with new gaskets (2).

Tightening torque
Oil cooler pipe union bolts
(a) : 36 N·m (3.6 kg-m, 26.0 lb-ft)
Transmission hook bolt
(b) : 19 N·m (1.9 kg-m, 13.5 lb-ft)
Oil cooler pipe bracket bolt: 6 N·m (0.6 kg-m, 4.5 lb-ft)

45) Install A/T fluid filler tube (4) and level gauge.

3. Union bolt

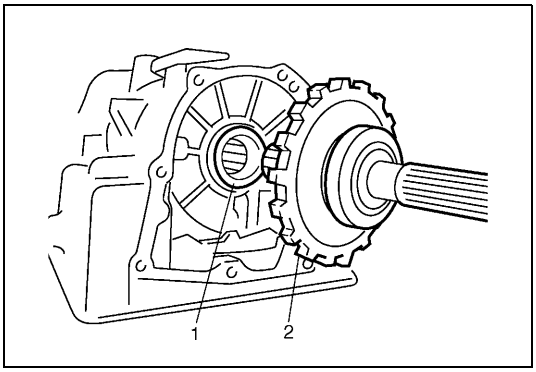

46) Apply grease to thrust bearing (1) and install it to transmission case.
47) Install output shaft assembly (2) to transmission case.

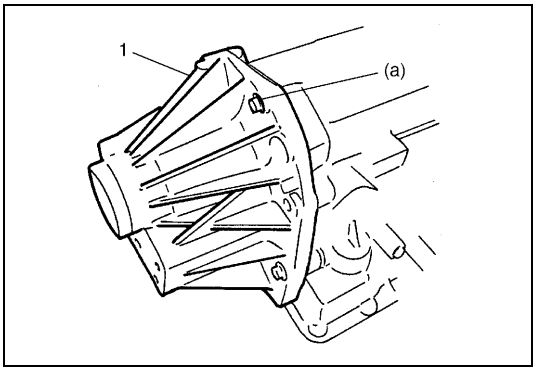

48) Install extension case (1).

Tightening torque
Extension case bolt
(a) : 17 N·m (1.7 kg-m, 12.5 lb-ft)

NOTE:

Use new bolts.

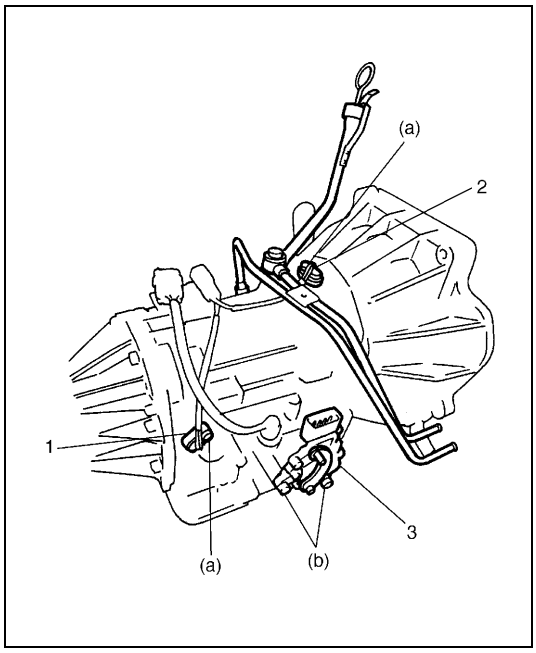

49) Install output shaft speed sensor (1) and input shaft speed sensor (2).
Apply grease to O-ring of each sensor.

Tightening torque
Output shaft speed sensor and input shaft speed sensor bolt
(a) : 8 N·m (0.8 kg-m, 6.0 lb-ft)

50) Install transmission range sensor (3).
Install it temporarily so that the adjustment can be done after installing A/T assembly back to the vehicle.

Tightening torque
Transmission range sensor bolt
(b) : 18 N·m (1.8 kg-m, 13.0 lb-ft)

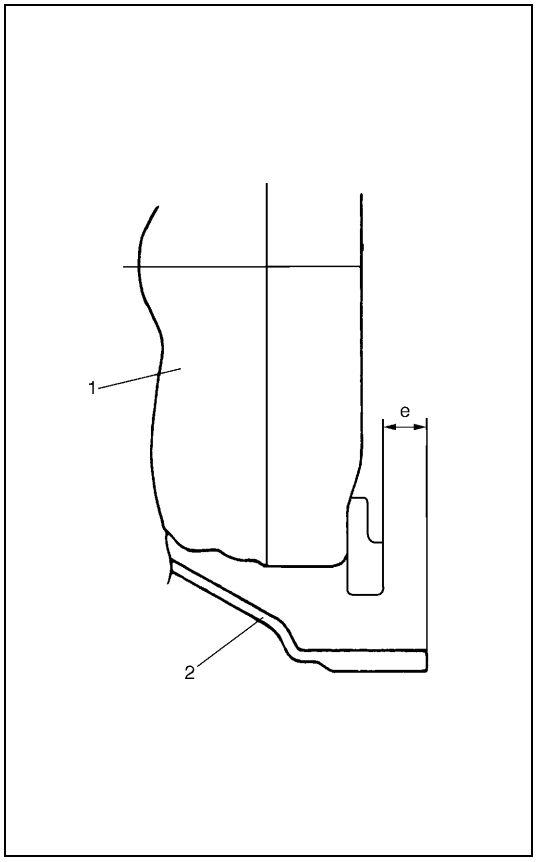

51) Install torque converter (1) to input shaft.
- Install torque converter, using care not to damage oil seal of oil pump.
- After installing torque converter, check that distance “e” is within specification.

Torque converter installing position
Distance “e” : More than 20.0 mm (0.787 in.)

- Check torque converter for smooth rotation.
- Apply grease around cup at the center of torque converter.

Grease 99000-25010

CAUTION:
- **Before installing converter, make sure that its pump hub portion is free from nicks, burrs or damage which may cause oil seal to leak.**
- **Be very careful not to drop converter on oil pump gear. Damage in gear, should it occur, may cause a critical trouble.**

2. Torque converter housing

Tightening Torque Specification

Fastening part	Tightening torque		
	N•m	kg-m	lb-ft
A/T fluid drain plug	22.0	2.2	16.0
Transmission range sensor bolts	18.0	1.8	13.0
Output shaft speed sensor bolt	8.0	0.8	6.0
Input shaft speed sensor bolt	8.0	0.8	6.0
Selector rod nut	7.0	0.7	5.0
A/T oil pan bolts	7.5	0.75	5.5
Oil strainer bolts	8.0	0.8	6.0
Selector lever assembly bolt	18.0	1.8	13.0
Shift control shaft nut	13.0	1.3	9.5
Solenoid valve bolts	8.0	0.8	6.0
Interlock cable screw	2.2	0.22	1.6
Interlock cable bracket nut	13.0	1.3	9.5
Drive plate bolts	19.0	1.9	14.0
Rear mounting to bracket blot	25.0	2.5	18.0
Rear mounting bracket to transmission bolts	25.0	2.5	18.0
Frame to rear mounting bolts	25.0	2.5	18.0
Engine to transmission bolts and nuts	80.0	8.0	58.0
Universal joint flange bolts and nuts	50.0	5.0	36.5
Exhaust pipe to manifold bolts	50.0	5.0	36.5
Muffler to exhaust pipe bolts	50.0	5.0	36.5
Detent spring assembly bolt	15.0	1.5	11.0
Oil pump assembly bolts	12.0	1.2	8.5
Torque converter housing bolts	19.0	1.9	14.0
Wire-to-solenoid assembly bolt	8.0	0.8	6.0
Valve body assembly bolts	5.5	0.55	4.0
Valve body bolts	10.0	1.0	7.5
Oil cooler pipe union bolts	36.0	3.6	26.0
Oil cooler pipe bracket bolt	6.0	0.6	4.5
Extension case bolts	17.0	1.7	12.5
Oil pump cover bolts	10.0	1.0	7.5

Special Tool

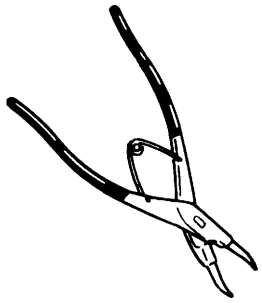 09900-06108 Snap ring plier (Closing type)	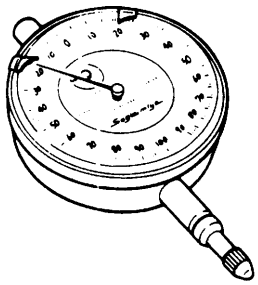 09900-20606 Dial gauge	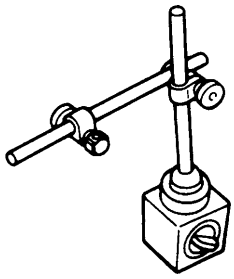 09900-20701 Magnetic stand	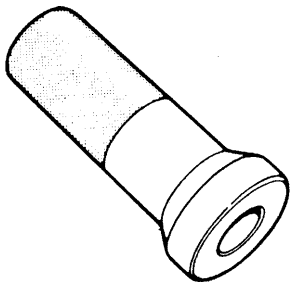 09913-76010 Bearing installer
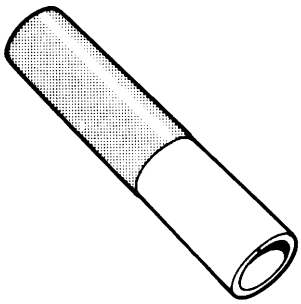 09913-80112 Bearing installer	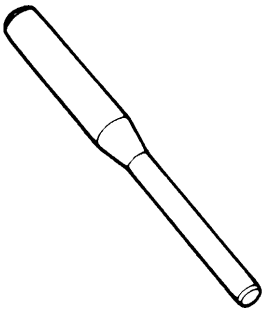 09925-78210 Spring pin remover (6 mm)	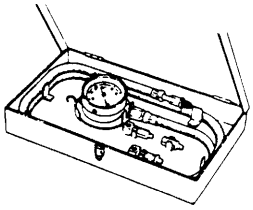 09925-37810 Oil pressure gauge	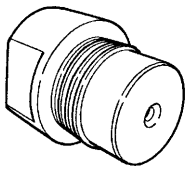 09926-26030 Clutch clearance checking base No.1
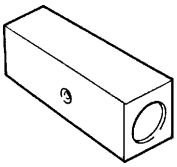 09926-26040 Clutch clearance checking base No.2	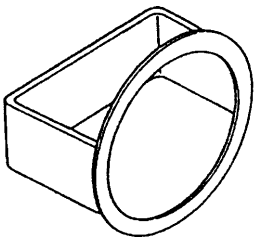 09926-96010 Clutch spring compressor	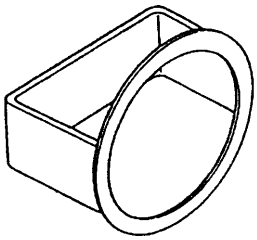 09926-96020 Clutch spring compressor	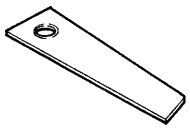 09952-06010 Dial gauge plate No.1

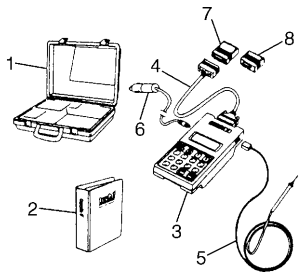 09931-76011 Tech 1A kit (SUZUKI scan tool) (See NOTE “A”.)	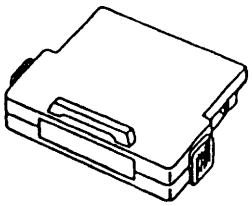 Mass storage cartridge for Tech 1A	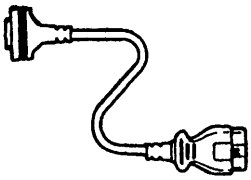 09931-76030 16/14 pin DLC cable for Tech 1A	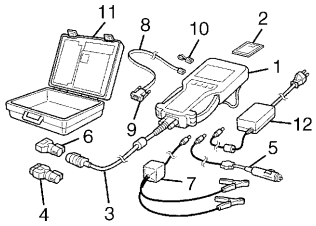 Tech 2 kit (SUZUKI scan tool) (See NOTE “B”.)

NOTE:

- **“A”: This kit includes the following items and substitutes for the Tech 2 kit.**
  1. Storage case, 2. Operator’s manual, 3. Tech 1A, 4. DLC cable (14/26 pin, 09931-76040), 5. Test lead/probe, 6. Power source cable, 7. DLC cable adaptor, 8. Self-test adaptor
- **“B”: This kit includes the following items and substitutes for the Tech 1A kit.**
  1. Tech 2, 2. PCMCIA card, 3. DLC cable, 4. SAE 16/19 adapter, 5. Cigarette cable, 6. DLC loopback adapter, 7. Battery power cable, 8. RS232 cable, 9. RS232 adapter, 10. RS232 loopback connector, 11. Storage case, 12. Power supply

Required Service Material

Material	Recommended SUZUKI product (Part Number)	Use
Automatic transmission fluid	An equivalent of DEXRON®-IIE or DEXRONR®-III	• Automatic transmission • Parts lubrication when installing
Lithium grease	SUZUKI SUPER GREASE C (99000-25030)	• Retaining parts in place when assembling • Oil seal lips • Oil pump D-ring
	SUZUKI SUPER GREASE A (99000-25010)	• Rod ends • Converter center cup

SECTION 7C

CLUTCH

CONTENTS

General Description **7C-2**
Diagnosis **7C-3**
On-Vehicle Service **7C-4**
Maintenance Service 7C-4
Clutch pedal height 7C-4
Clutch pedal free travel 7C-4
Clutch cable routing 7C-5
Clutch Cable 7C-6
Unit Repair Overhaul **7C-7**
Clutch Cover, Clutch Disc, Flywheel and Release Bearing 7C-7
Tightening Torque Specification **7C-13**
Required Service Material **7C-13**
Special Tool **7C-13**

General Description

The clutch is a diaphragm-spring clutch of a dry single disc type. The diaphragm spring is of a taperingfinger type, which is a solid ring in the outer diameter part, with a series of tapering fingers pointing inward. The disc, carrying three torsional coil springs, is slidably mounted on the transmission input shaft with a serration fit.

The clutch cover is secured to the flywheel, and carries the diaphragm spring in such a way that the peripheral edge of the spring pushes on the pressure plate against the flywheel with the disc in between, when the clutch release bearing is held back: This is the engaged condition of the clutch.

Depressing the clutch pedal causes the release bearing to advance and push on the tips of the tapering fingers of the diaphragm spring. When this happens, the diaphragm spring pulls the pressure plate away from the flywheel, thereby interrupting the flow of drive from flywheel through clutch disc to transmission input shaft.

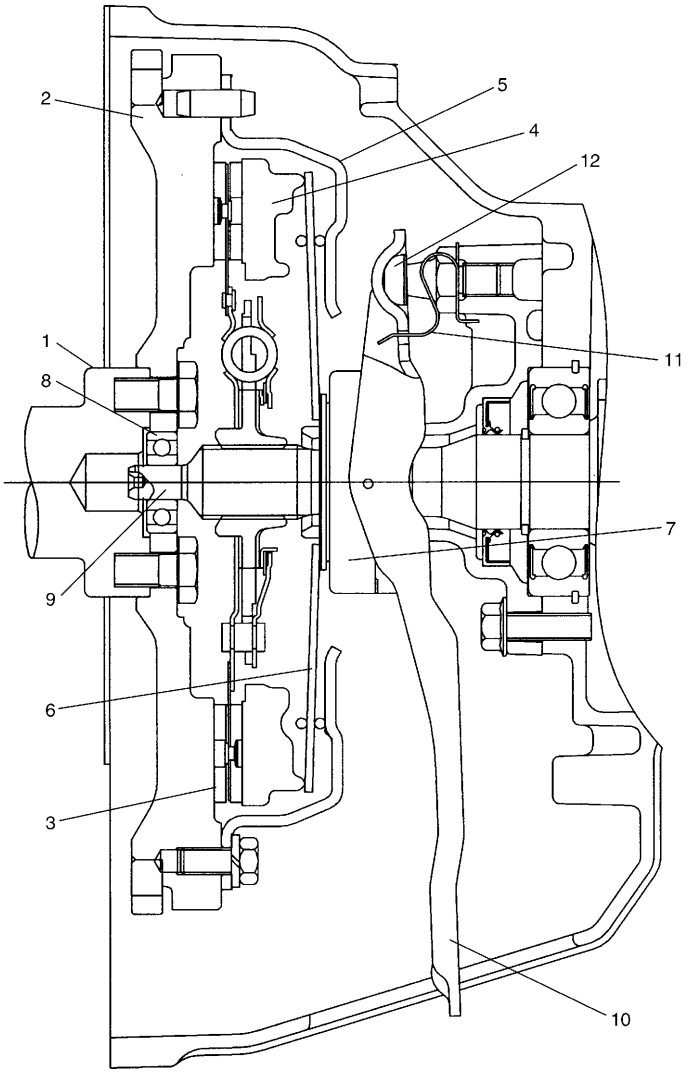

1. Crankshaft	7. Release bearing
2. Flywheel	8. Input shaft bearing
3. Clutch disc	9. Input shaft
4. Pressure plate	10. Release fork
5. Clutch cover	11. Release fork return spring
6. Diaphragm spring	12. Clutch release fork support

Diagnosis

Condition	Possible Cause	Correction
Slipping clutch	Loss of clearance at the tip of release fork	Adjust as prescribed.
	Clutch facings dirty with oil	Replace.
	Clutch facings excessively worn	Replace.
	Weakened diaphragm spring	Replace.
	Distorted pressure plate or flywheel surface	Replace.
	Improper clutch pedal free travel	Adjust and, as necessary, replace clutch facings.
Dragging clutch	Improper clutch pedal free travel	Adjust free travel.
	Weakened diaphragm spring, or worn spring tip	Replace.
	Damaged or worn splines of transmission input shaft	Replace.
	Front input shaft bearing worn or broken	Replace.
	Excessively wobbly clutch disc	Replace.
	Clutch facings broken or dirty with oil	Replace.
Clutch vibration	Glazed clutch facings	Repair or replace.
	Clutch facings dirty with oil	Replace.
	Wobbly clutch disc, or poor facing contact	Replace.
	Weakened torsion springs in clutch disc	Replace.
	Clutch disc rivets loose	Replace the disc.
	Distorted pressure plate or flywheel surface	Replace.
	Weakened engine mounting or loosened mounting bolt or nut	Retighten or replace.
Noisy clutch	Worn or broken release bearing	Replace.
	Front input shaft bearing worn down	Replace.
	Excessive rattle of clutch disc hub	Replace the disc.
	Cracked clutch disc	Replace.
	Pressure plate and diaphragm spring rattling	Replace.
Grabbing clutch	Clutch facings soaked with oil	Replace.
	Excessively worn clutch facings	Replace.
	Rivet heads showing out of the facing	Replace.
	Weakened torsion springs	Replace.

On-Vehicle Service

Maintenance Service

Clutch pedal height

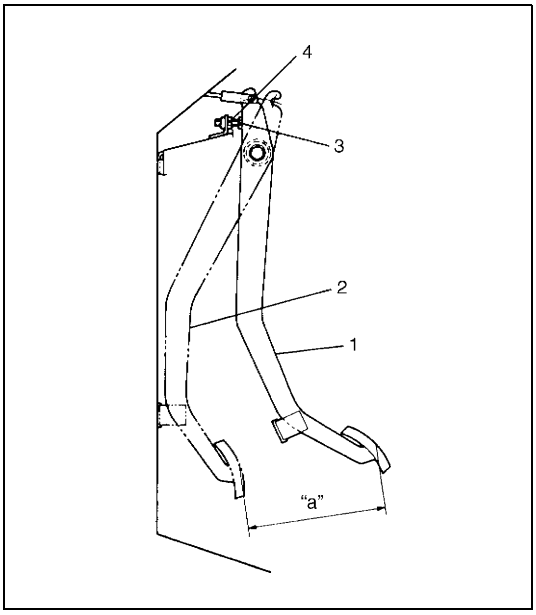

Check that clutch pedal height is within “a” range as illustrated.
If clutch pedal height is out of specification, adjust it by turning pedal stopper bolt.
Be sure to tighten lock nut (4) after adjustment.

Clutch pedal height
“a”: 140 mm (5.51 in.)

1.	Clutch pedal free position
2.	Fully depressed position
3.	Clutch pedal stopper bolt

Clutch pedal free travel

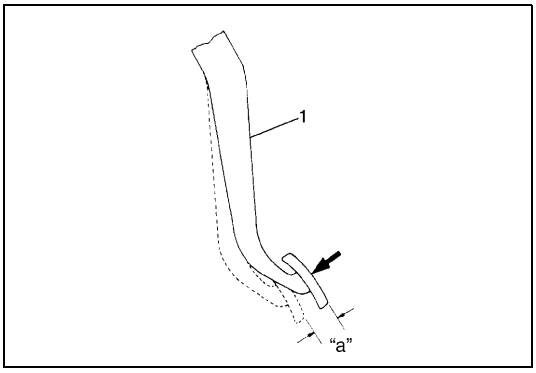

1) Depress clutch pedal (1), stop the moment clutch resistance is felt, and measure distance (clutch pedal free travel). Free travel should be within the following specification.

Clutch pedal free travel
“a”: 10 – 20 mm (0.4 – 0.8 in.)

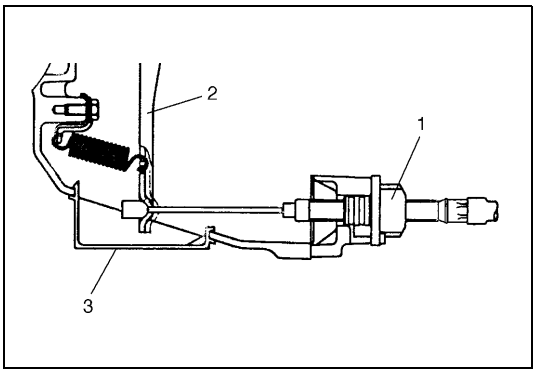

2) If free travel is out of specification, adjust it with clutch cable adjust nut (1).

Release fork free travel
: 2 – 4mm (0.08 – 0.16 in.)

2.	Release fork
3.	Cap

Clutch cable routing

1) For left-hand side steering vehicle.

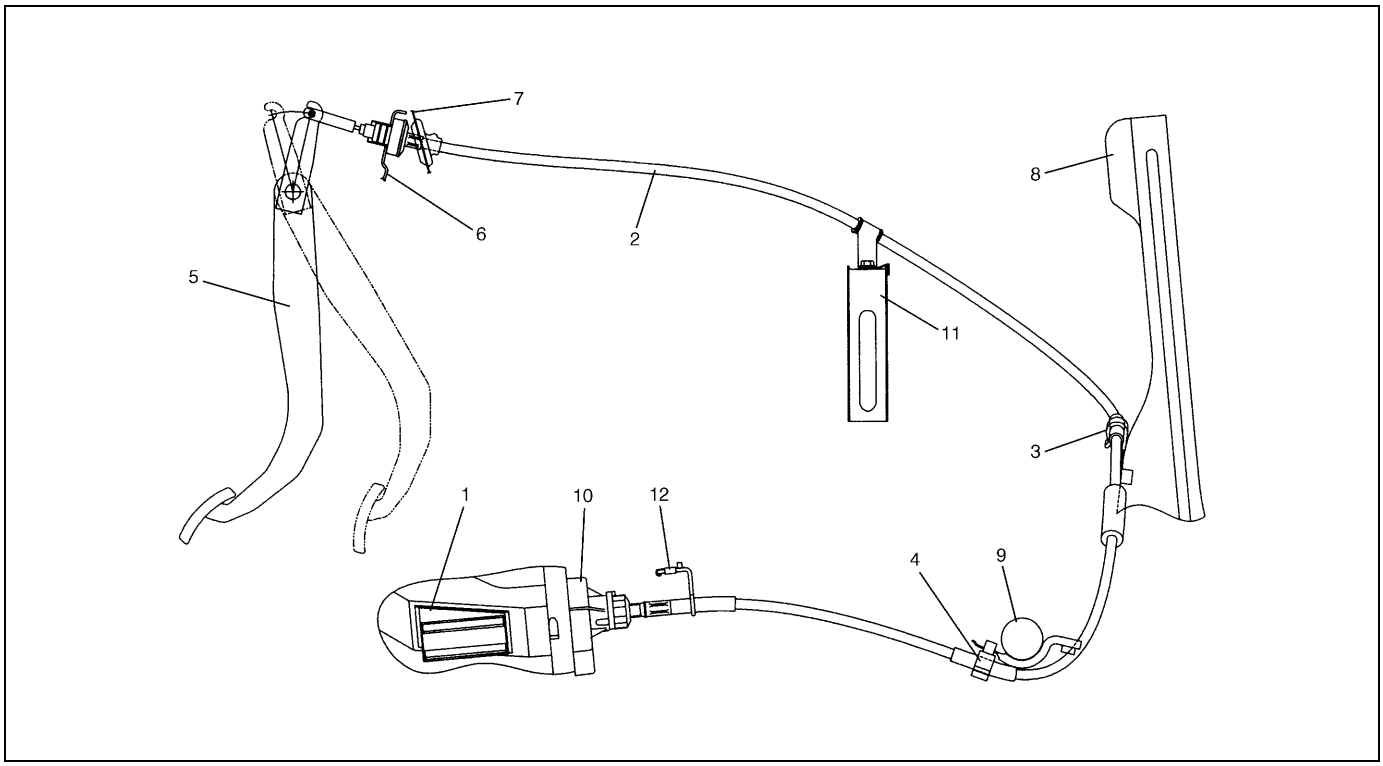

1. Clutch housing cap	4. Clutch cable clamp No.2	7. Dash panel	10. Clutch cable bracket
2. Clutch cable	5. Clutch pedal	8. Radiator stay	11. Air cleaner bracket
3. Clutch cable clamp No.1	6. Pedal bracket	9. Cross member	12. Clutch cable clamp No.3

2) For right-hand side steering vehicle.

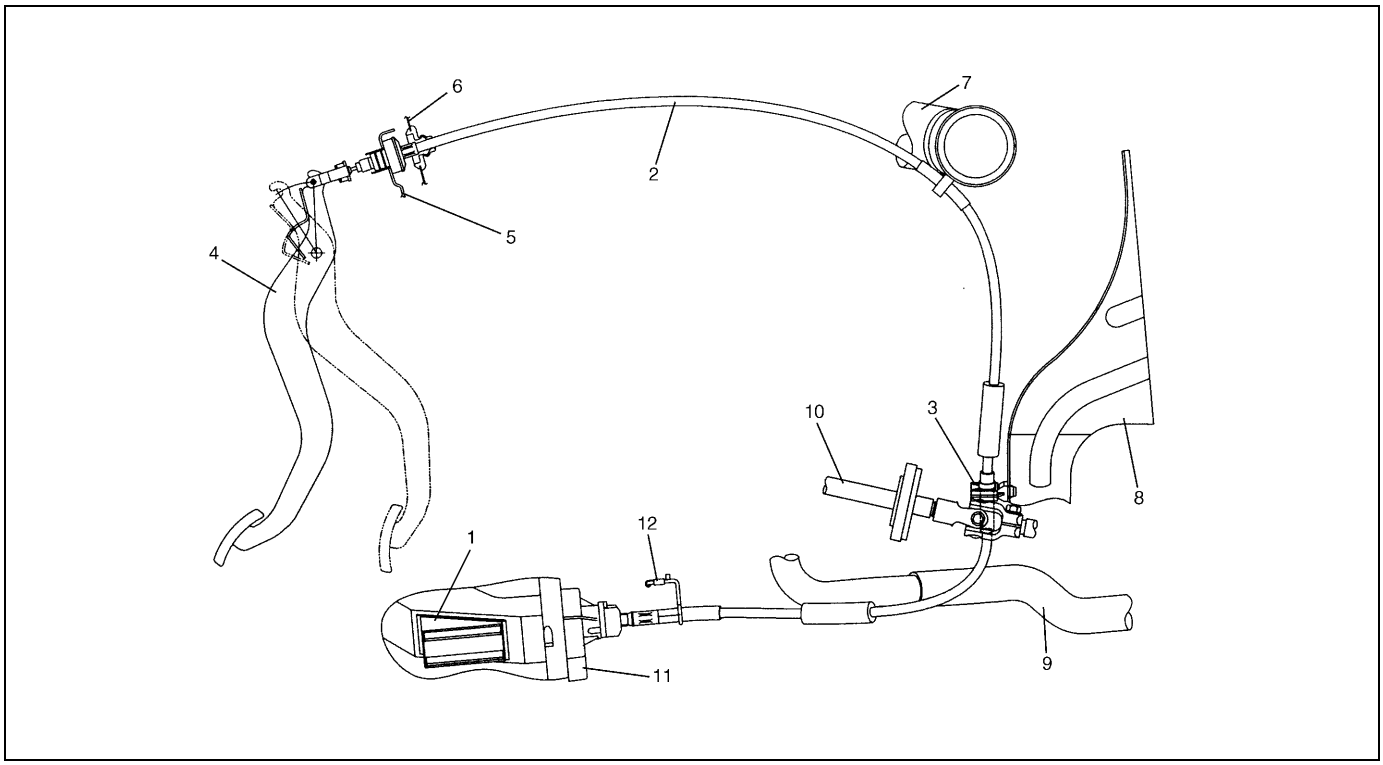

1. Clutch housing cap	4. Clutch pedal	7. Air cleaner outlet hose	10. Steering lower shaft
2. Clutch cable	5. Pedal bracket	8. Radiator stay	11. Clutch cable bracket
3. Clutch cable clamp No.1	6. Dash panel	9. Radiator outlet hose	12. Clutch cable clamp No.2

Clutch Cable

REMOVAL

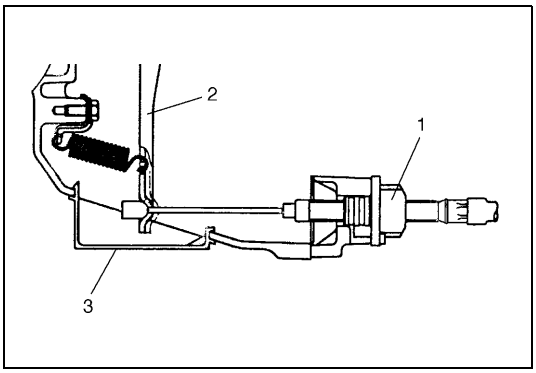

1) Remove clutch housing cap (3).
2) Loosen clutch cable adjust nut (1) and disconnect clutch cable from release fork (2).

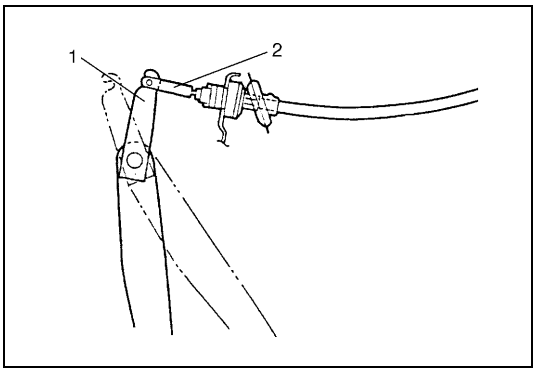

3) Disconnect cable hook (2) at clutch pedal shaft arm (1), then take off cable.

INSPECTION

Inspect clutch cable and replace it for any of following conditions.

- Excessive cable friction
- Frayed cable
- Bent or kinked cable
- Worn end

INSTALLATION

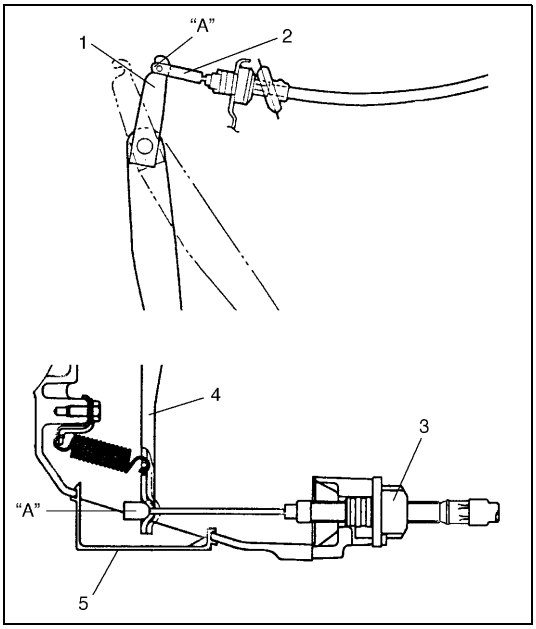

1) Before installing cable, apply grease to cable end hook (2) and release fork (4) as shown figure.

"A" : Grease 99000-25010

2) Screw in clutch cable adjust nut (3) and adjust free travel of pedal to specification by turning nut.
3) Check clutch for proper function with engine running.

1.	Clutch pedal shaft arm
5.	Cap

Unit Repair Overhaul

Clutch Cover, Clutch Disc, Flywheel and Release Bearing

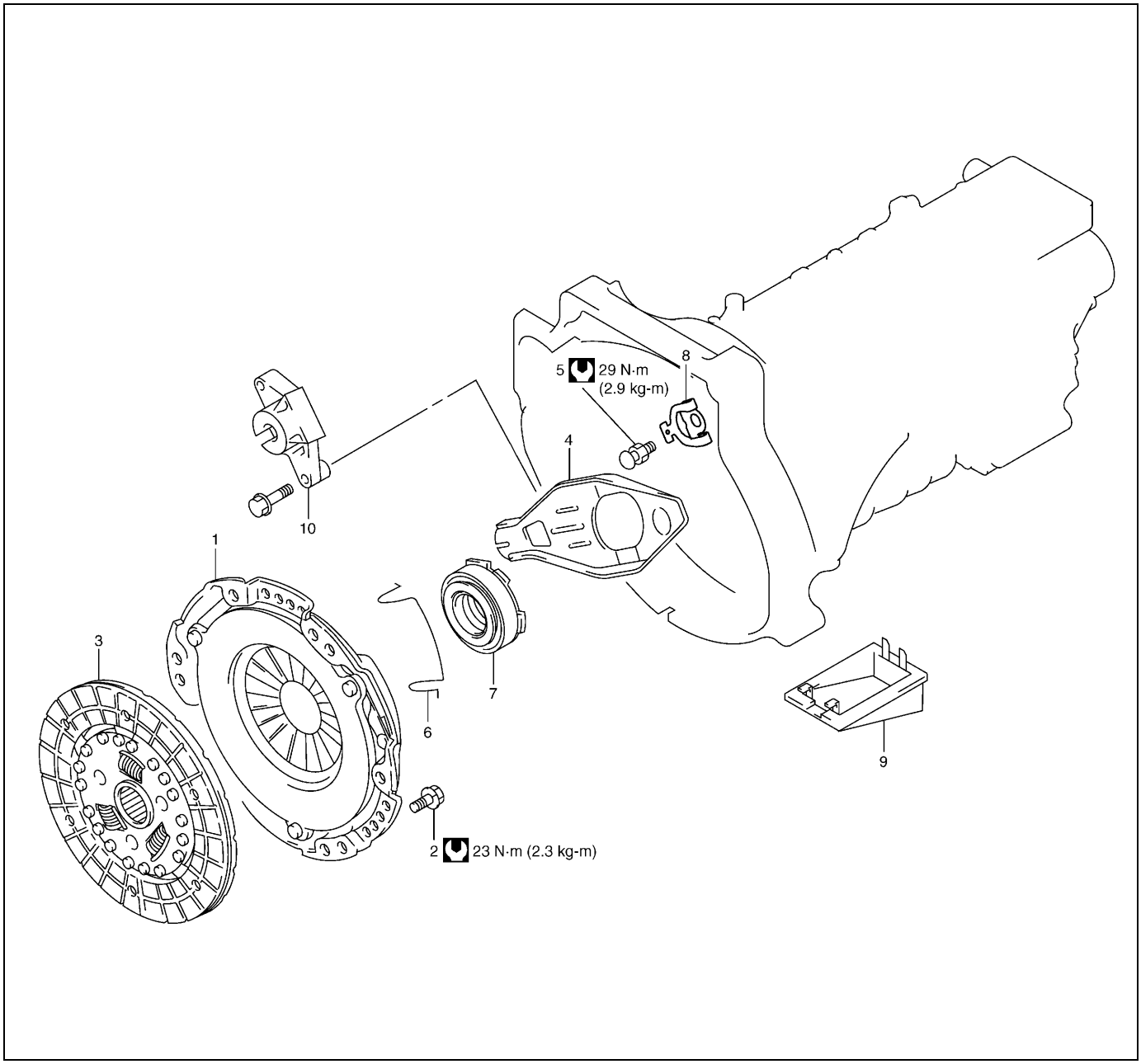

1. Clutch cover	5. Clutch release fork support	9. Clutch housing cap
2. Bolt	6. Release bearing clip	10. Clutch cable bracket
3. Clutch disc	7. Release bearing	Tightening torque
4. Release fork	8. Release fork return spring	

REMOVAL

1) Removal of clutch presupposes that the transmission has been separated from engine according to the method outlined in “Dismounting of Transmission” of Section 7A.

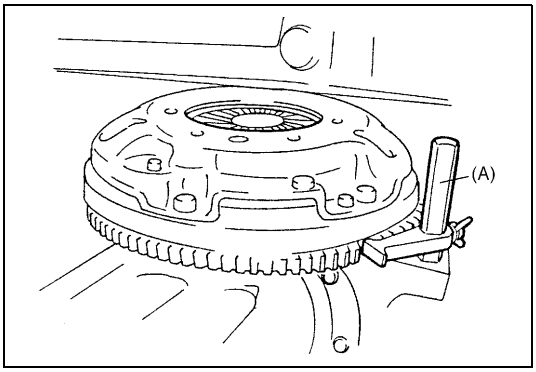

2) Hold flywheel stationary with special tool and remove bolts securing clutch cover to flywheel, and take off clutch cover and disc.

Special tool
(A): 09924-17810

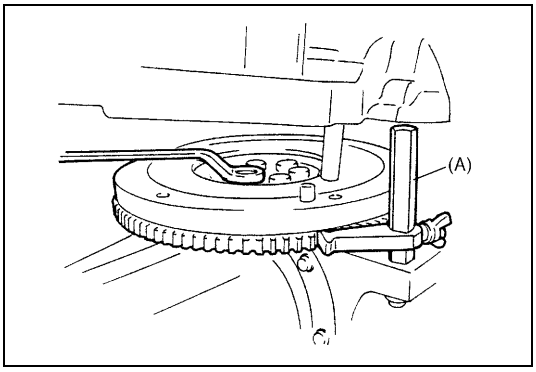

3) Hold flywheel stationary with special tool and remove bolts securing flywheel to crank shaft, and take off flywheel.

Special tool
(A): 09924-17810

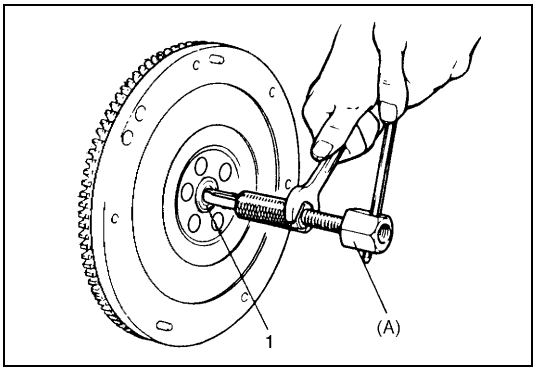

4) Use special tool for pulling out of input shaft bearing (1).

Special tool
(A): 09921-26020

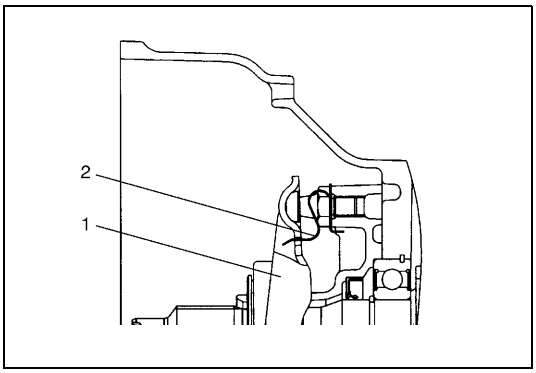

5) Detach clutch release fork (1) from clutch release fork return spring (2).

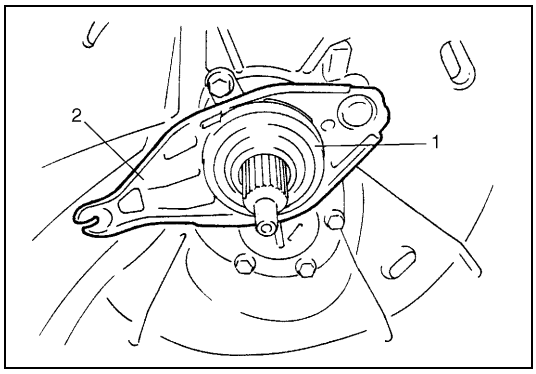

6) Remove release bearing (1) and clutch release fork (2).

INSPECTION

Clutch Disc Facing Surface Condition

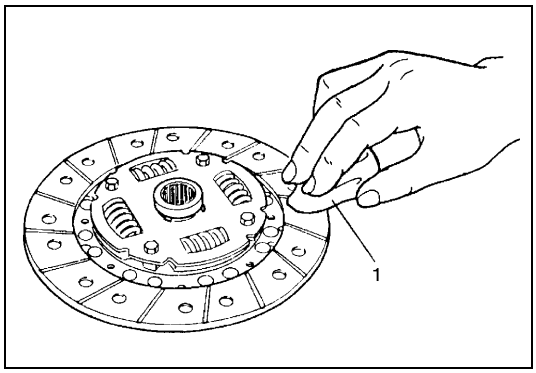

A burnt or glazed facing can be reconditioned by grinding it with No. 120 – 200 sandpaper. If surface is in bad condition beyond repair, replace whole clutch disc assembly.

1. Sandpaper

Clutch Facing Wear

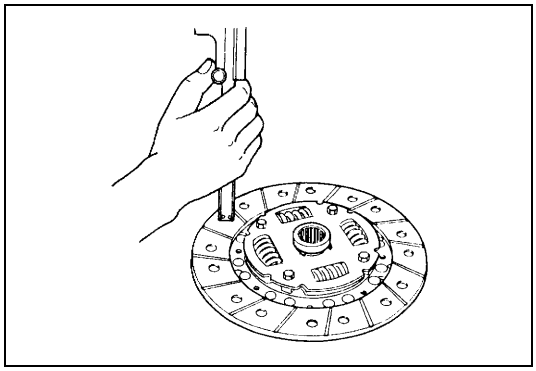

Check wear of facing by measuring depth of each rivet head depression, i.e. distance between rivet head and facing surface. If depressing is found to have reached service limit at any of the holes, replace clutch disc assembly.

Rivet head depth of clutch disc
Standard: 1.2 mm (0.05 in.)
Service limit: 0.5 mm (0.02 in.)

Backlash in Disc Serration Fit

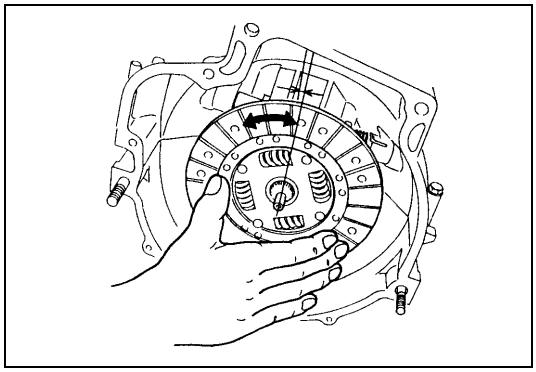

Check backlash by turning disc back and forth as mounted on transmission input shaft. Replace disc assembly if backlash is noted to exceed service limit. Backlash here is a circular displacement as measured with a dial indicator.

Backlash limit in serration fit of clutch disc
: 0.8 mm (0.03 in.)

Clutch Cover

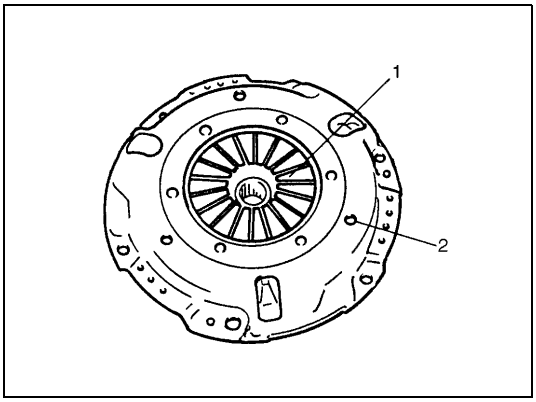

Inspect clutch cover for evidence of diaphragm spring rivets getting loose. If rivets are loose or are getting loose, replace cover assembly as such cover makes rattling noise when clutch pedal is depressed.

Inspect tips of tapering fingers for wear. If tips are worn excessively, replace cover assembly.

1.	Spring wear
2.	Rivet

Release Bearing

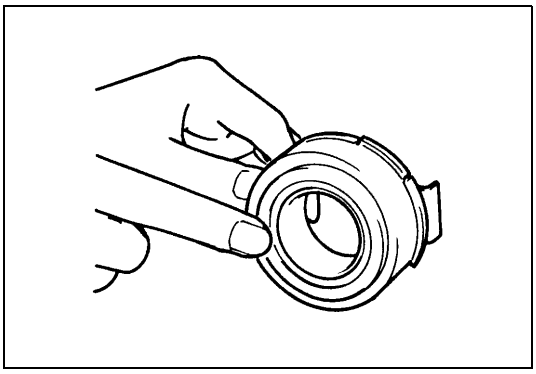

Replace release bearing if it sticks, rattles or makes abnormal noise when spun and turned by hand.

Input Shaft Bearing

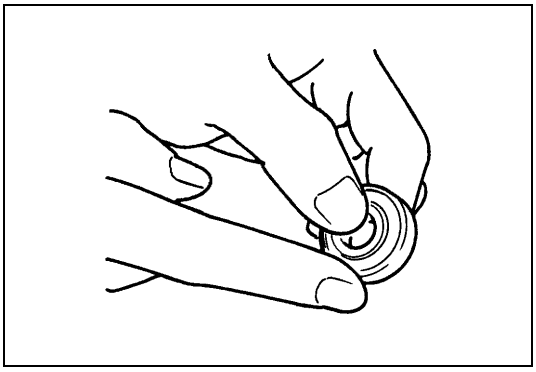

Replace input shaft bearing if it sticks, rattles or makes abnormal noise when spun and turned by hand.

Flywheel

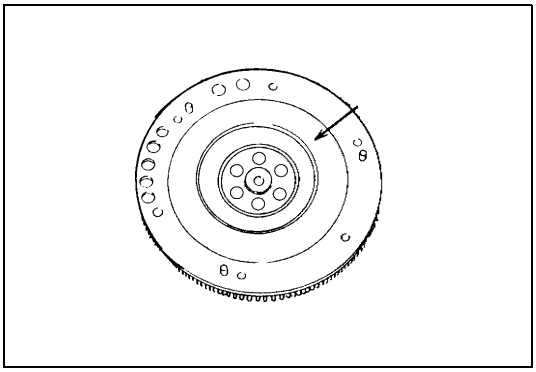

Check surface contacting clutch disc for any wear or damage.

INSTALLATION

NOTE:

- **Before installing flywheel, clutch disc and clutch cover, hoist vehicle and lift transmission by jack up to transmission installation position.**
- **Before assembling, make sure that flywheel surface and pressure plate surface have been cleaned and dried thoroughly.**

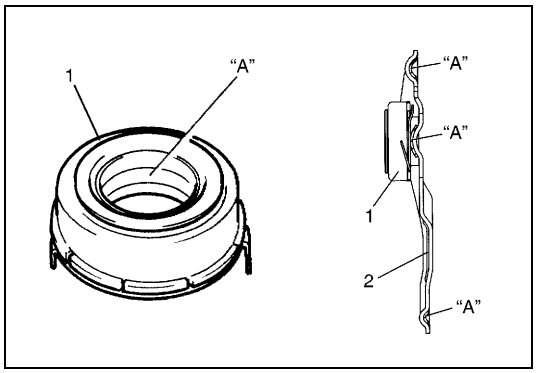

1) Before installing retainer, apply grease to release bearing (1) inner surface and release fork (2).

"A": Grease 99000-25010

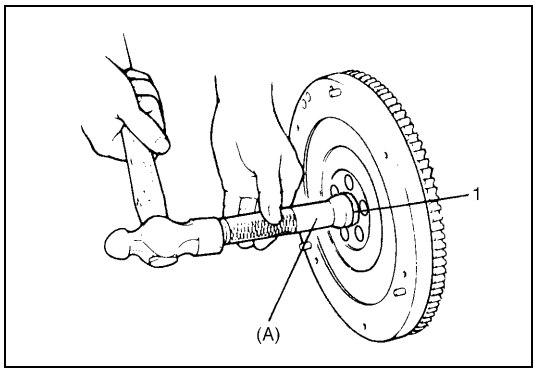

2) Install input shaft bearing (1) to flywheel using special tool.

Special tool
(A): 09925-98210

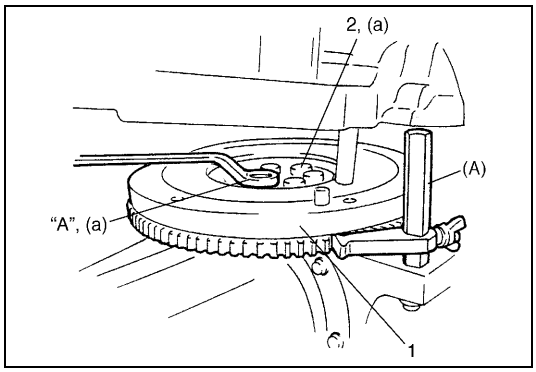

3) Install flywheel (1) to crankshaft and tighten bolts (2) applied with sealant at thread part to specification.

Special tool
(A): 09924-17810

"A": Sealant 99000-31110

Tightening torque
Flywheel bolts
(a): 76 N·m (7.6 kg-m, 55.0 lb-ft)

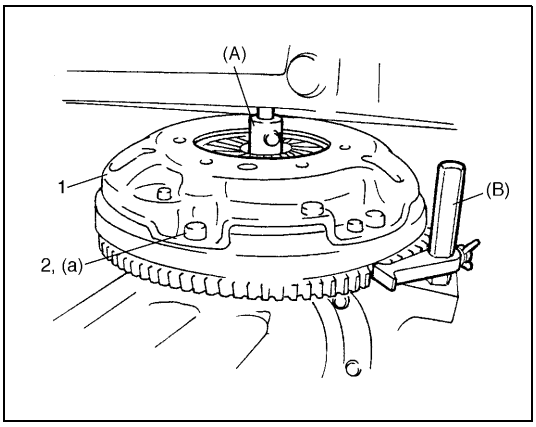

4) Using special tool, install clutch disc and clutch cover (1). Tighten clutch cover bolts (2) to specification using special tool.

Special tool
(A): 09923-36320
(B): 09924-17810

Tightening torque
Clutch cover bolts
(a): 23 N·m (2.3 kg-m, 17.0 lb-ft)

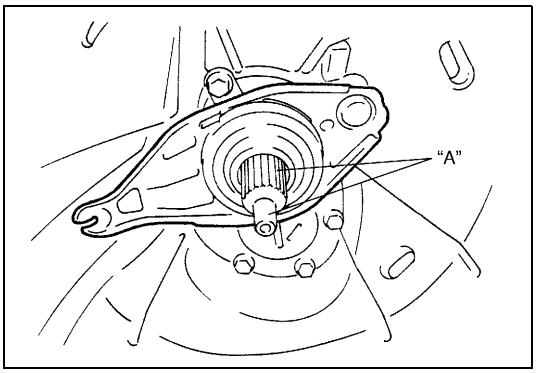

5) Slightly apply grease to input shaft. Then join transmission with engine. Refer to "Remounting" of Section 7A.

"A": Grease 99000-25210

NOTE:

Turn crankshaft with wrench from front while inserting transmission input shaft to clutch disc until splines mesh.

Tightening Torque Specification

Be sure to torque each nut or bolt, if loosened, to specification given below. If specified tightening torque for particular bolt or nut is not included here, refer to Section 0A of this manual.

Fastening part	Tightening torque		
	N•m	kg-m	lb-ft
Flywheel bolts	76	7.6	55.0
Clutch cover bolts	23	2.3	17.0
Clutch release fork support	29	2.9	21.0

Required Service Material

Material	Recommended SUZUKI product (Part Number)	Use
Lithium grease	SUZUKI SUPER GREASE A (99000-25010)	• Cable junction with pedal shaft arm. • Release fork. • Inside of release bearing.
	SUZUKI SUPER GREASE I (99000-25210)	• Input shaft spline and front end.
Sealant	SUZUKI BOND No. 1215 (99000-31110)	• Flywheel bolts.

Special Tool

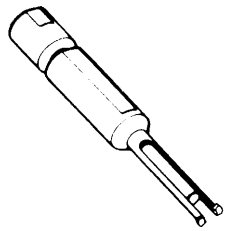	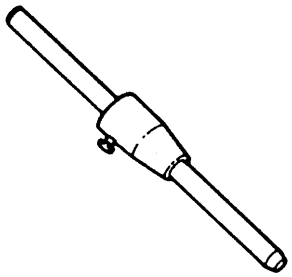	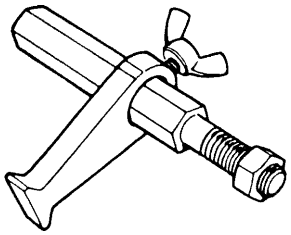	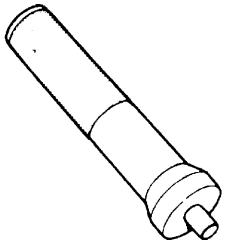
09921-26020 Bearing remover (for input shaft bearing)	09923-36320 Clutch center guide	09924-17810 Flywheel holder	09925-98210 Input shaft bearing installer

SECTION 7D

TRANSFER

NOTE:

When servicing 2WD vehicles, use the same procedure described in this section but refer to the parts diagram of 2WD vehicles on page 7D-2 to check their differences from 4WD vehicles.

CONTENTS

General Description 7D-2
Planetary Gear Unit.....7D-3
Planetary Gear Operation 7D-3
Gear Shift Control 7D-4
Diagnosis 7D-5
On-Vehicle Service.....7D-6
Oil Change 7D-6
4WD Switch 7D-6
Unit Repair Overhaul 7D-8
Tightening Torque Specification 7D-24
Required Service Material 7D-24
Special Tool.....7D-25

General Description

The transfer consists of an input shaft, drive chain, output front shaft for 4WD model, output rear shaft and their accompanying gears, hubs, sleeves, synchronizer ring, shift shaft, etc. For 4WD model, the planetary gear unit installed at the center of the output rear shaft selects the Lo range or the Hi range and the sleeve on the output front shaft side selects the 2WD or 4WD.

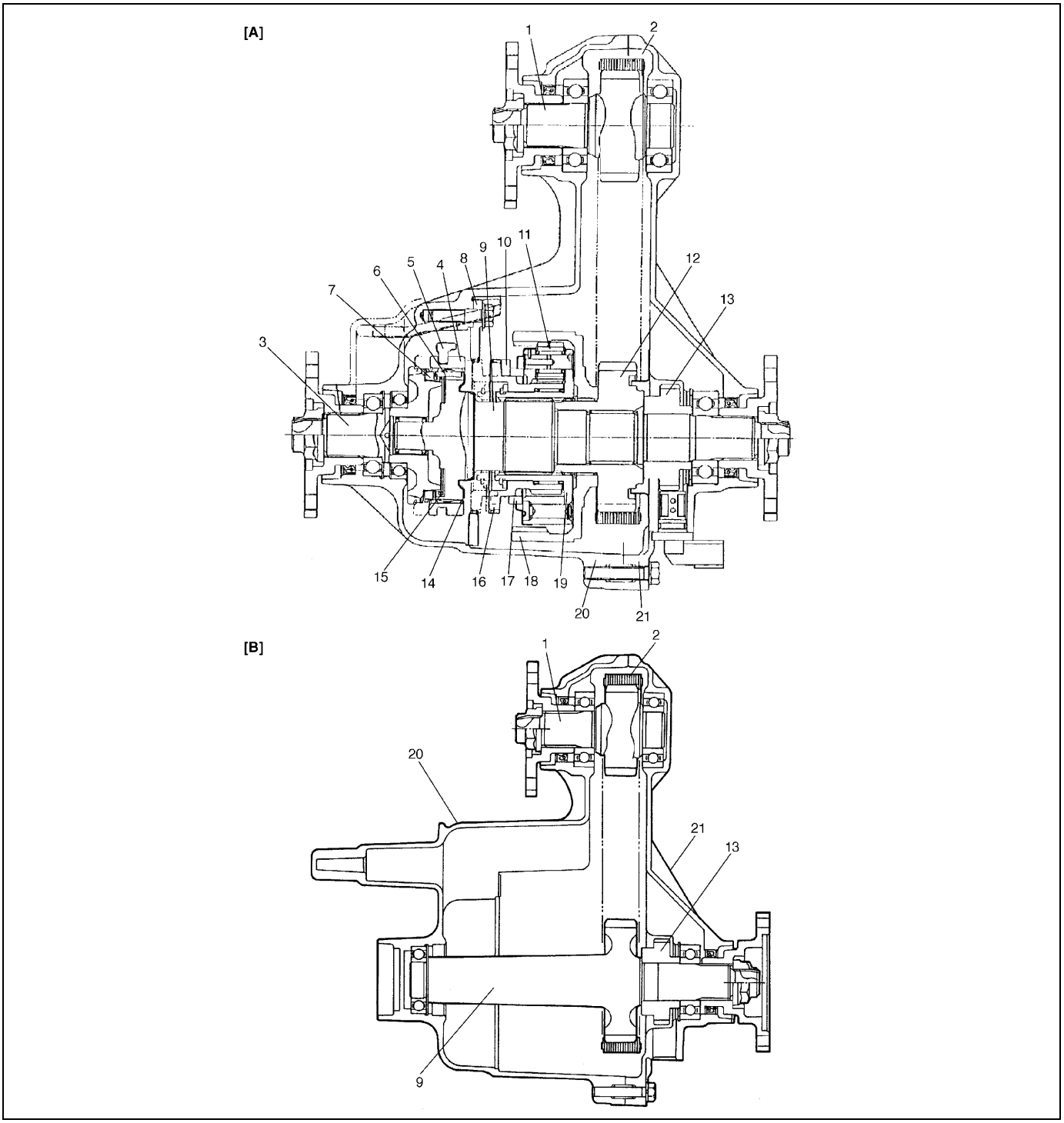

1. Input shaft	9. Output rear shaft	17. Shift fork spacer for 4WD model
2. Drive chain	10. Hi-Lo shift fork for 4WD model	18. Ring gear for 4WD model
3. Output front shaft for 4WD model	11. Pinion gear for 4WD model	19. Planetary carrier for 4WD model
4. Sleeve for 4WD model	12. Sprocket gear for 4WD model	20. Front case
5. 2-4 shift fork for 4WD model	13. Speedometer sensor rotor	21. Rear case
6. Synchronizer key for 4WD model	14. Key retainer for 4WD model	[A] : 4WD model
7. Synchronizer ring for 4WD model	15. Key spring for 4WD model	[B] : 2WD model
8. Lock-up plate for 4WD model	16. Sun gear for 4WD model	

Planetary Gear Unit

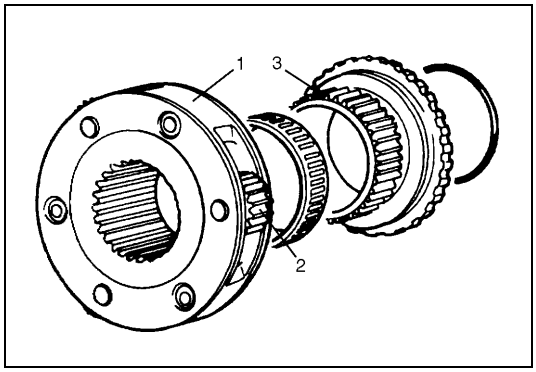

The planetary gear unit consists of a planetary carrier (1), 3 pinion gears (2) and a sun gear (3). As the Hi-Lo shift fork moves this planetary gear unit, the gear is selected in the 4H↔N↔4L pattern.

Planetary Gear Operation

4H range

As the sprocket output gear (5) and the output rear shaft (6) are engaged through the planetary carrier (3) serration, they turn as one unit.

L range

As the sun gear (1) is engaged with the lock-up plate and fixed, rotation of the sprocket output gear is transmitted through the ring gear (2), planetary pinion (4) and planetary carrier while being reduced and causes the output rear shaft to turn.

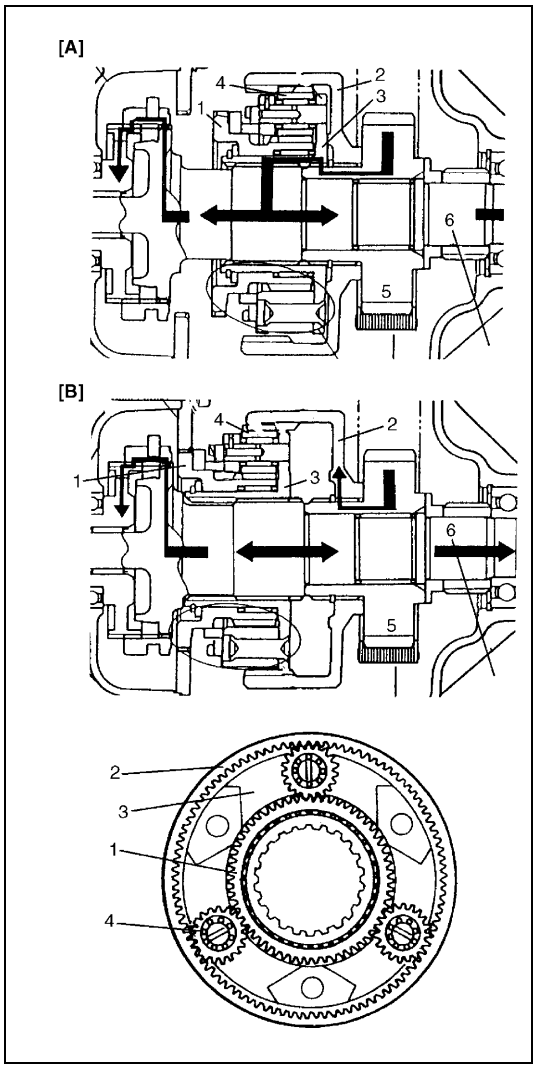

[A]:	4H range
[B]:	4L range

Gear Shift Control

The gear is shifted to the 2H, 4H or 4L shift position by using the shift lever provided inside of the vehicle. The control mechanism consists of a shift lever, shift shaft, interlock block, shift fork, etc.

The shift lever is installed directly to the transfer case. To shift the shift control lever between 2H and 4H positions, move it in the shift shaft direction. To shift it from the 4H position to the 4L position, push it down at the 4H position and then move it in the shift shaft direction.

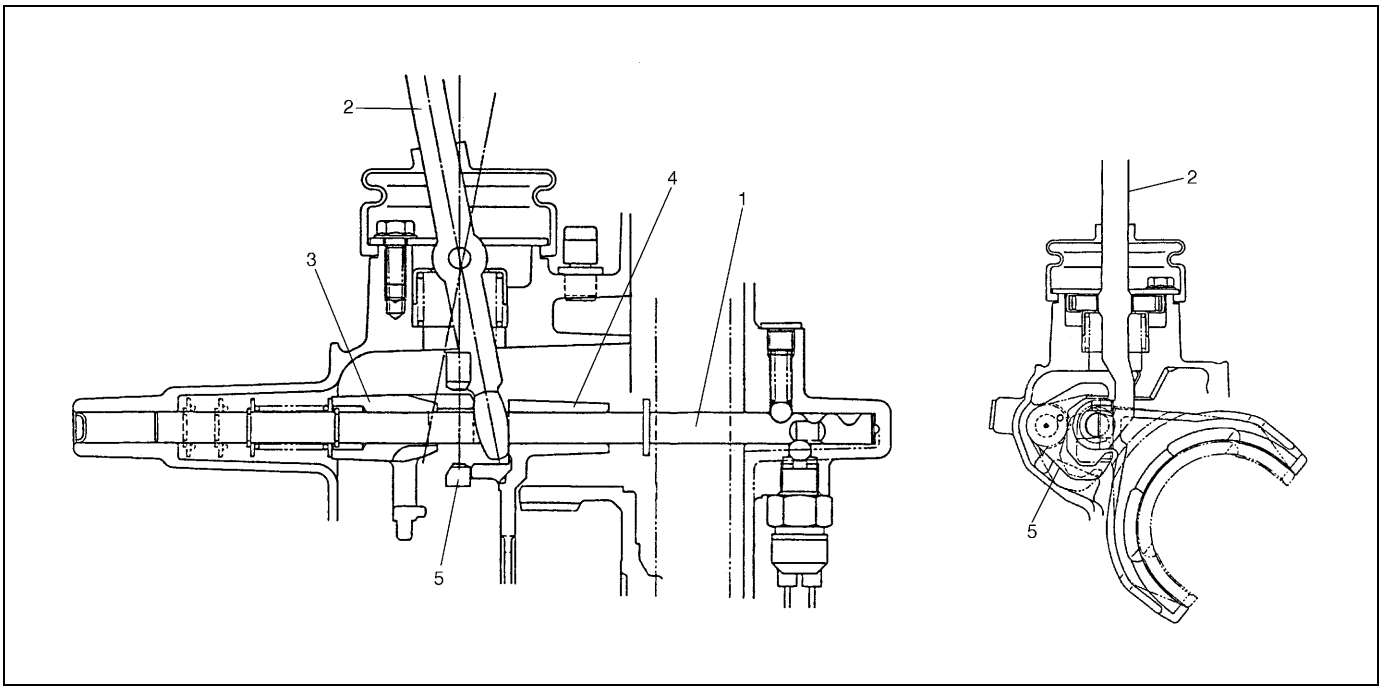

1. Shift shaft	2. Shift lever	3. 2-4 shift fork	4. Hi-Lo shift fork	5. Interlock block

Control Mechanism

The shift lever fitted through the shift shaft and fixed to it with a pin. Also, the 2-4 shift fork to shift the gear in the 2H↔4H pattern and the Hi-Lo shift fork in the 4H↔4L pattern are fitted so that they can slide on the shift shaft. The interlock block cannot move in the shaft direction of the shift shaft as its movement is restricted by the interlock pin installed to the transfer case, but it can turn within the range of the groove in the interlock block. Interlock block can be turned by pushing shift control lever downward at 4H shift position, it restricts 2-4 shift fork movement and enable Hi-Lo shift fork to side forward, causes 4L shift position.

Diagnosis

Condition	Possible Cause	Correction
Gear slipping out of mesh	• Worn shift fork shaft	Replace.
	• Worn shift fork or sleeve	Replace.
	• Weak or damaged locating spring	Replace.
	• Worn bearings on input shaft or output shaft	Replace.
	• Worn chamfered tooth on sleeve or gear	Replace sleeve and gear.
	• Worn synchronizer ring	Replace.
Gears refusing to disengage	• Distorted shift shaft or shift fork	Replace.
	• Weakened or broken synchronizer spring	Replace.
Hard shifting	• Inadequate or insufficient lubricant	Replenish.
	• Worn chamfered tooth on sleeve or gear	Replace sleeve and gear.
	• Distorted shift shaft	Replace.
Noise	• Inadequate or insufficient lubricant	Replenish.
	• Damaged or worn bearing (s)	Replace.
	• Damaged or worn gear (s)	Replace.
	• Damaged or worn chamfered tooth on sleeve or gear	Replace.

On-Vehicle Service

Oil Change

1) Before changing or inspecting oil, be sure to stop engine and lift vehicle horizontally.
2) With vehicle lifted up, check oil level and leakage. If leakage exists, correct or repair it.
3) Drain old oil, tighten drain plug (1) after applying sealant to its thread and fill new specified oil as shown below by specified amount (roughly up to level hole).

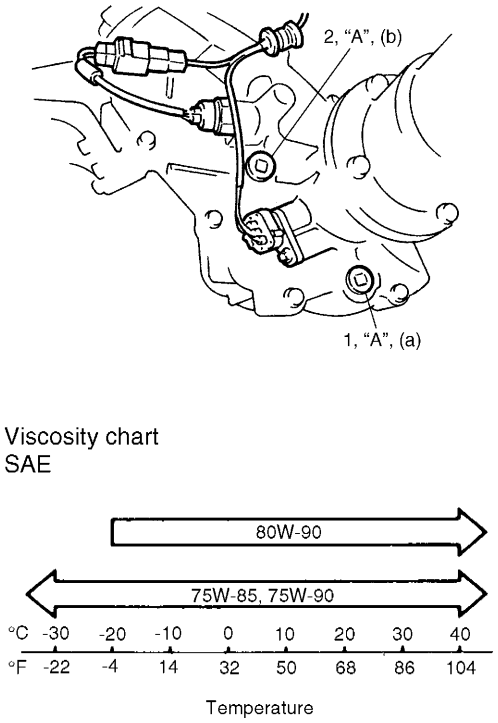

"A" : Sealant 99000-31110

Tightening torque
Oil drain plug (a) : 23 N·m (2.3 kg-m, 17.0 lb-ft)

NOTE:

- **It is highly recommended to use SAE 75W-90 gear oil.**
- **Whenever vehicle is hoisted for any other service work than oil change, also be sure to check for oil leakage.**

Gear oil :
API GL-4
For SAE classification, refer to viscosity chart in the figure.
Oil capacity for 4WD model : 0.9 liters (1.9/1.6 US/Imp. pt)
Oil capacity for 2WD model : 1.34 liters (2.8/2.4 US/Imp. pt)

4) Torque level/filler plug (2) as specified below after applying sealant to its thread.

"A" : Sealant 99000-31110

Tightening torque
Oil level/filler plug (b) : 23 N·m (2.3 kg-m, 17.0 lb-ft)

4WD Switch

Inspection

1) Hoist vehicle.
2) Disconnect 4WD switch coupler (1).

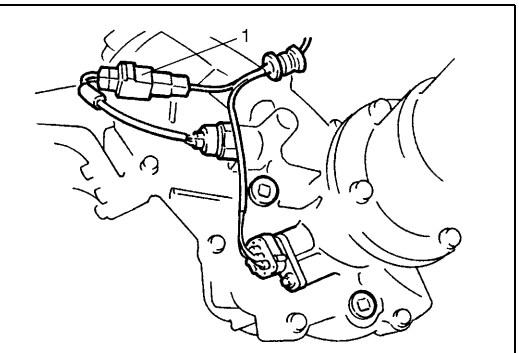

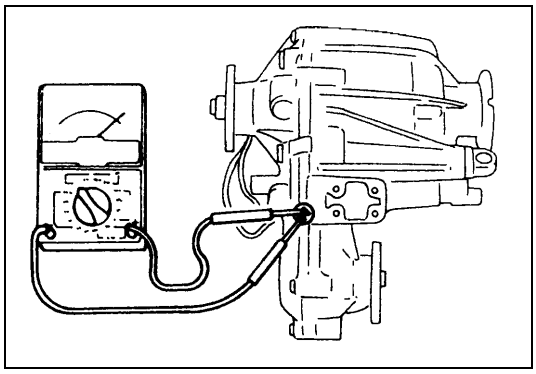

3) Check continuity between two terminals of 4WD switch.

Transfer position	
2H	Not continuity
4H, 4L	Continuity

4) Connect 4WD switch coupler.

Unit Repair Overhaul

DISMOUNTING

In Engine Room

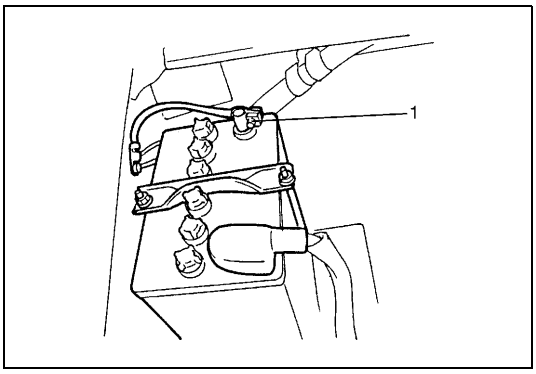

1) Disconnect negative cable (1) at battery.

In Cabin

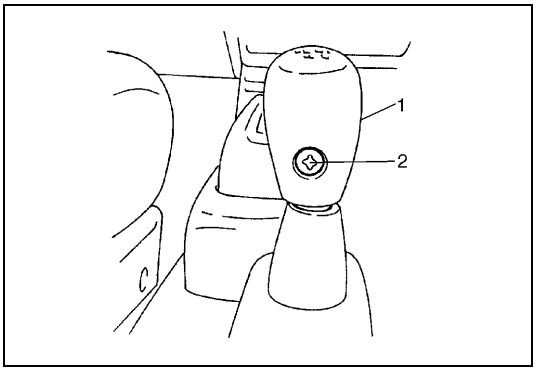

1) Remove transfer shift knob (1) by removing screw (2).

On Lift

1) Drain transfer oil referring to “Oil Change” in this section.

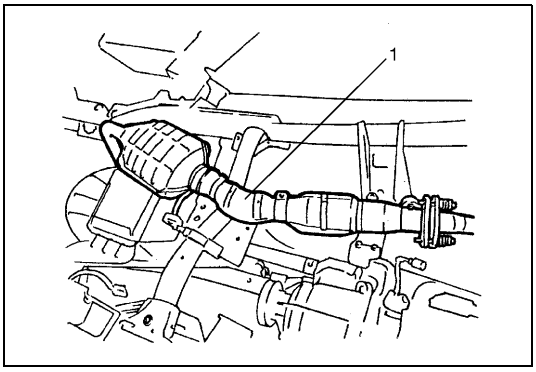

2) Remove exhaust pipe (1).

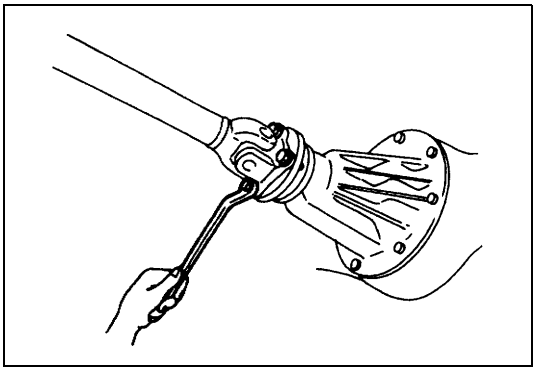

3) Give match marks on each joint flange and propeller shaft.
4) Remove securing bolts from each flange connection, sever 3 propeller shafts from transfer gear box and suspend propeller shafts with a wire hook or like.

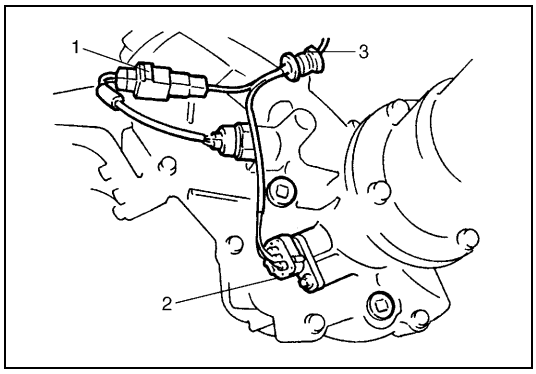

5) Disconnect 4WD switch wire at coupler (1) and unclamp harness. Disconnect speed sensor coupler.

2.	Speed sensor
3.	Clamp

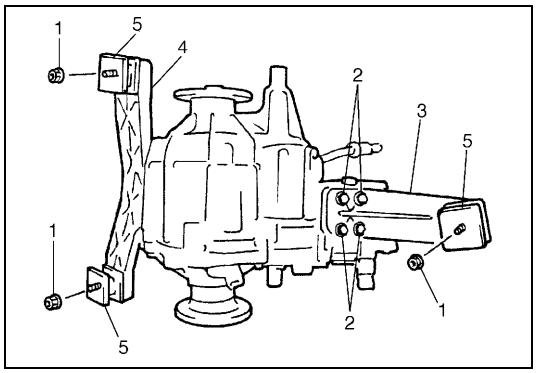

6) With transfer supported on jack, remove 3 mounting nuts (1) and 4 bolts (2).
7) Remove transfer with mountings from body.
8) Remove mounting from transfer.

3.	Mounting right bracket
4.	Mounting left bracket
5.	Mounting

REMOUNTING

For remounting, reverse dismounting procedure, noting following.

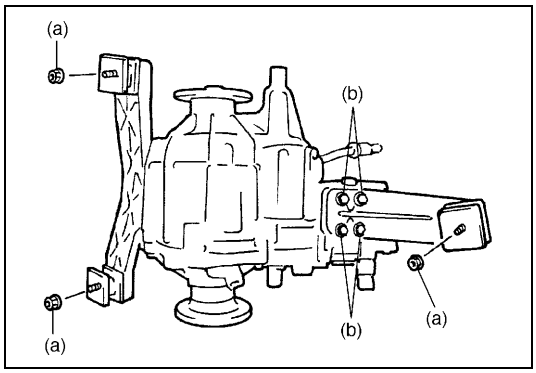

- Use specified torques as given below.

Tightening torque
Transfer mounting nut
(a) : 30 N·m (3.0 kg-m, 22.0 lb-ft)
Transfer mounting bracket bolt
(b) : 23 N·m (2.3 kg-m, 17.0 lb-ft)

- Set each clamp for wiring securely.
- Connect couplers to speed sensor and 4WD switch securely.
- Pour gear oil to transfer as specified.
- When installing propeller shafts, align the each match marks. For tightening torque of flange bolts, refer to “Propeller shafts” in Section 4B.
- Install exhaust pipe to “Component” in Section 6K.
- Install shift knob.
- Connect battery.

DISASSEMBLY

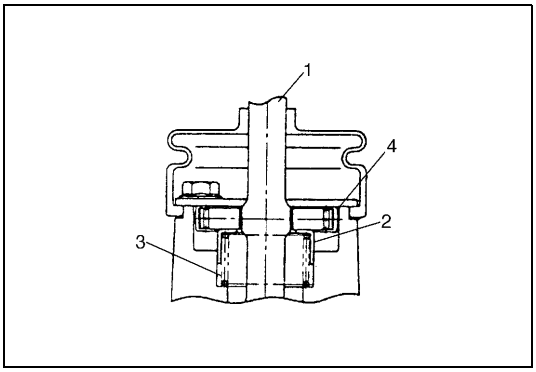

1) Remove boot and then plate, bush (4) and spring (3). Disconnect gear shift control lever (1).

2. Cap

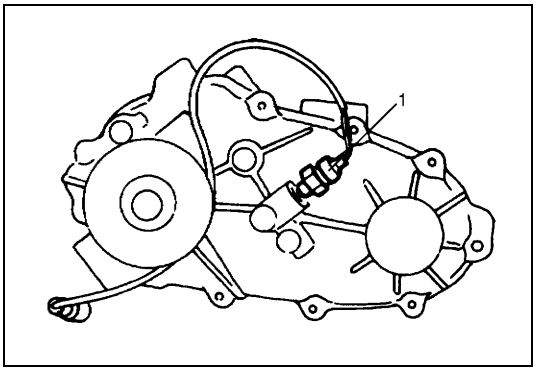

2) Remove 4WD switch (1) and take out steel ball.

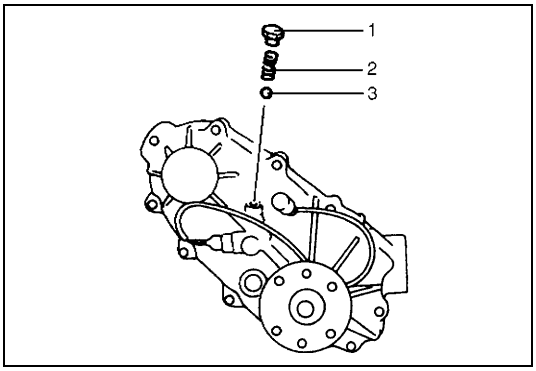

3) Remove locating spring bolt (1) and take out locating spring (2) and steel ball (3).

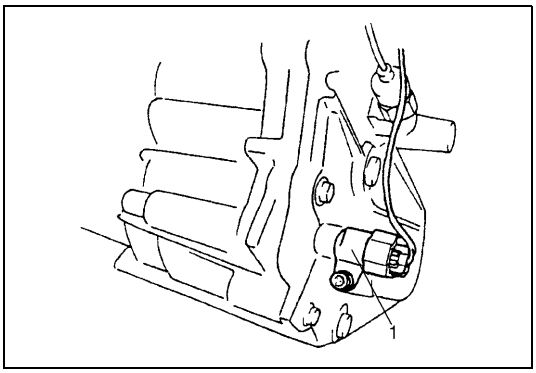

4) Remove vehicle speed sensor (1).

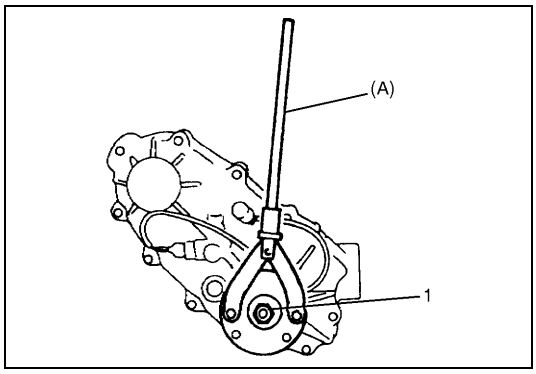

5) Remove rear output side flange. To lock flange, use special tool. With flange locked, remove flange nut (1).

Special tool
(A) : 09930-40113

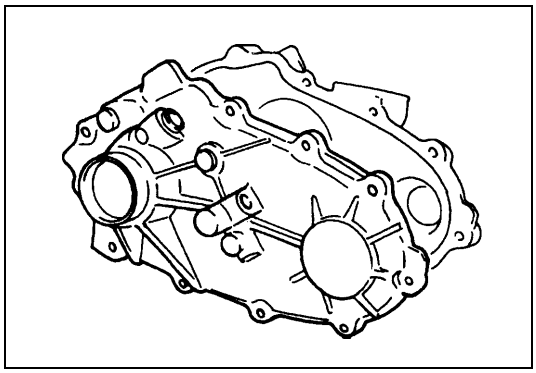

6) Remove 11 rear case bolts and then separate case by using special tool.

NOTE:

To separate case, use special tool at 2 points in turn and make opening wider evenly.

Special tool
09912-34501

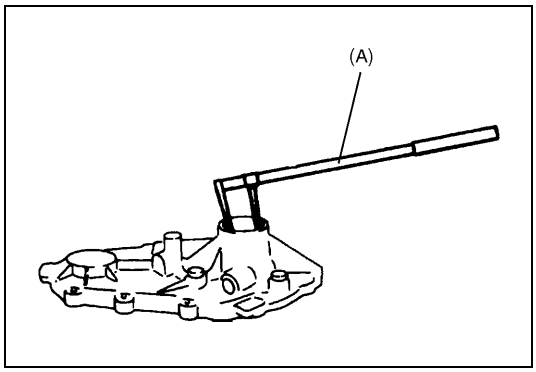

7) Remove oil seal from rear case by using special tool.

Special tool
(A) : 09913-50121

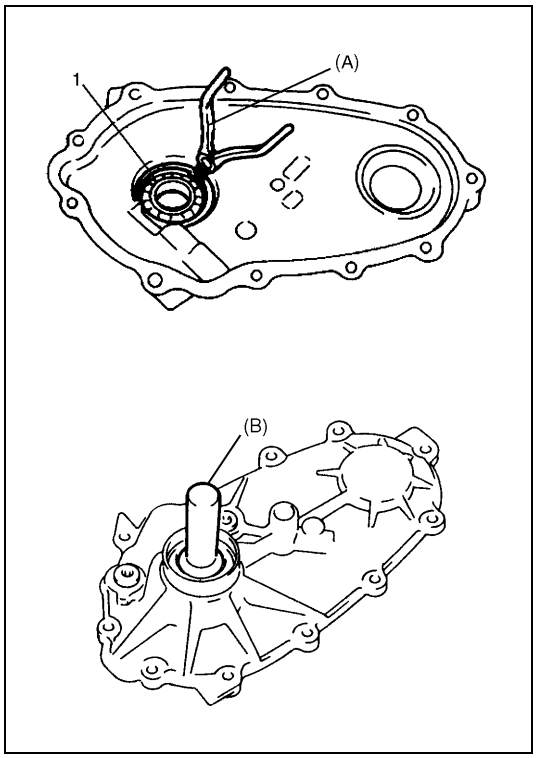

8) Remove circlip (1) by using special tool and then remove bearing by using special tool.

Special tool
(A) : 09900-06108
(B) : 09913-75830

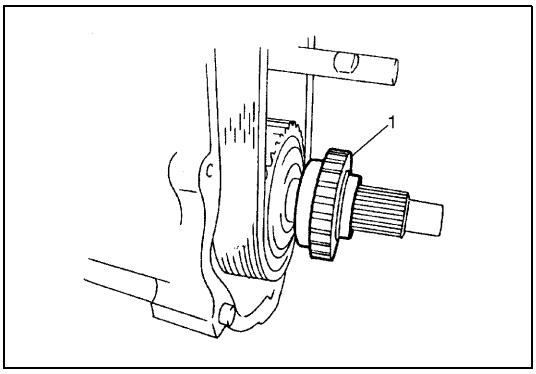

9) Pull out speedometer sensor rotor (1).

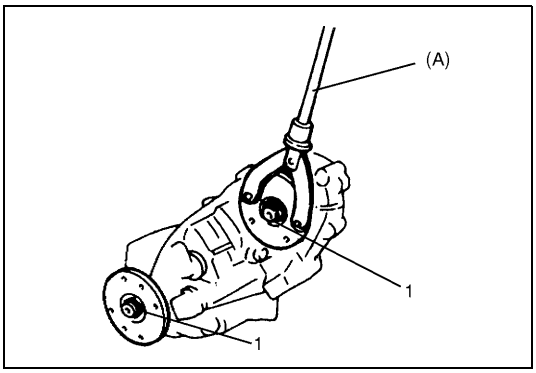

10) Remove flanges. To lock flange, use special tool. With flange locked, remove flange nut (1).

Special tool
(A) : 09930-40113

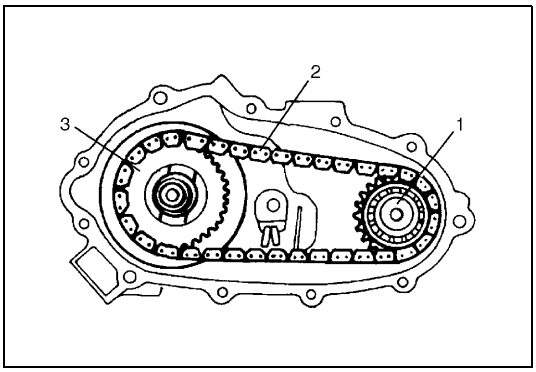

11) Remove drive chain (2), input shaft (1) and ring and sprocket gear assembly (3) as an assembly.

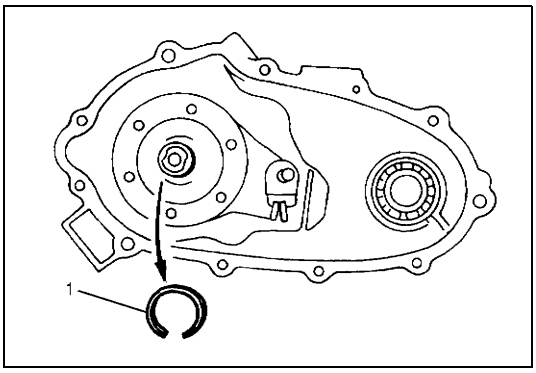

12) Remove needle roller bearing (1).

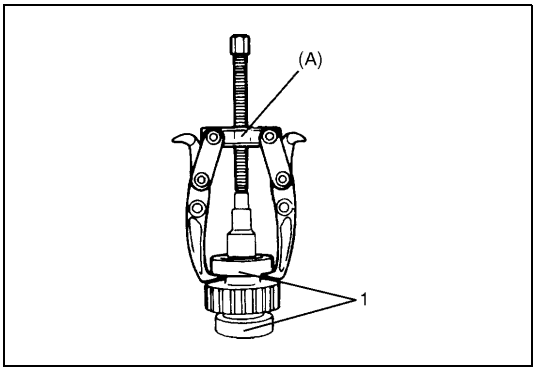

13) Pull out bearings (1) from input shaft by using special tool.

Special tool
(A) : 09913-65135

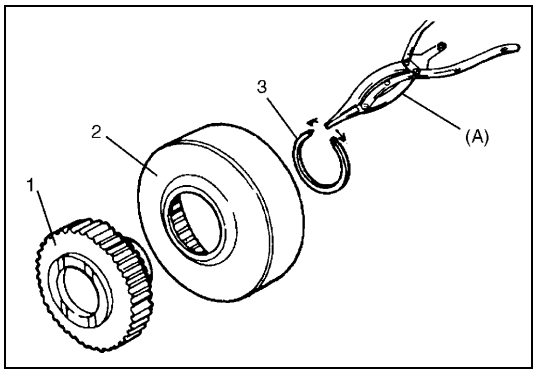

14) Disassemble ring and sprocket gear assembly by removing circlip (3).

Special tool
(A) : 09920-76010

1.	Sprocket gear
2.	Ring gear

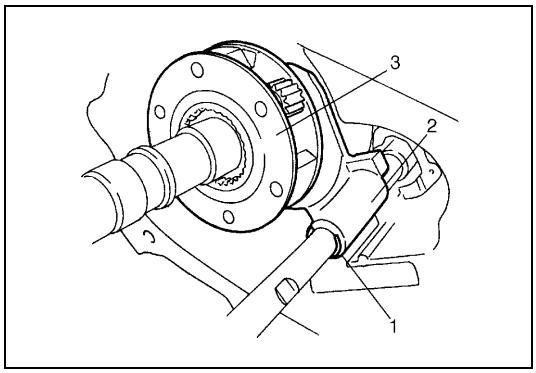

15) Remove snap ring (1) and pull out Hi-Lo shift fork (2) and planetary gear assembly (3) as an assembly.

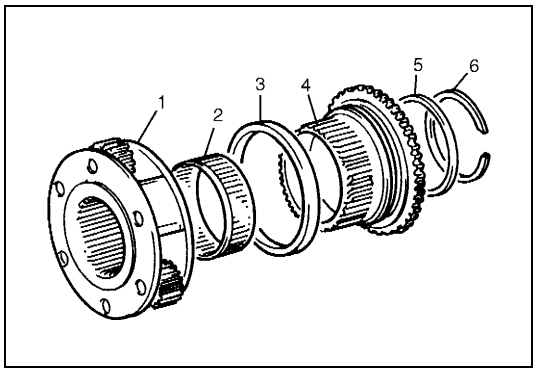

16) Disassemble planetary gear unit by removing circlip (6).

1.	Planetary gear assembly
2.	Needle roller bearing
3.	Shift fork spacer
4.	Planetary sun gear
5.	Thrust washer

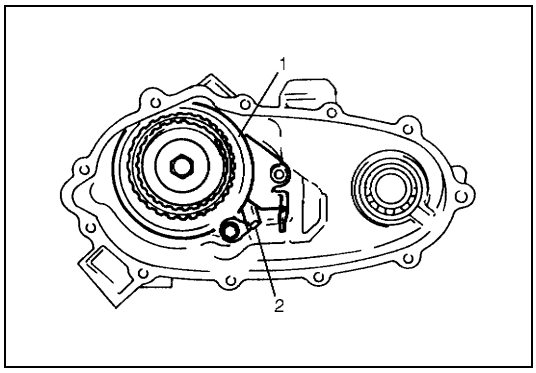

17) Remove lock up plate (1) and oil gutter (2) by removing 3 bolts.

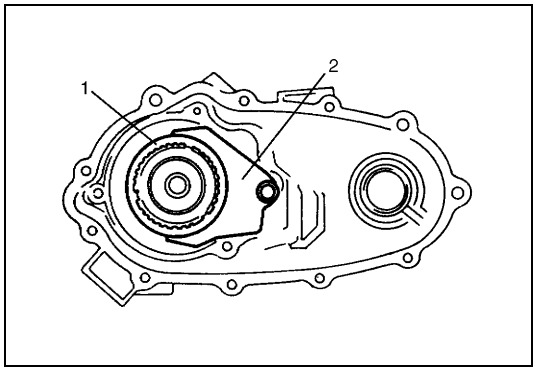

18) Remove output rear shaft, shift shaft, reduction clutch sleeve (1) and 2-4 shift fork (2) as an assembly.
Disassemble shift shaft by removing snap ring as necessary.
19) Remove synchronizer ring.

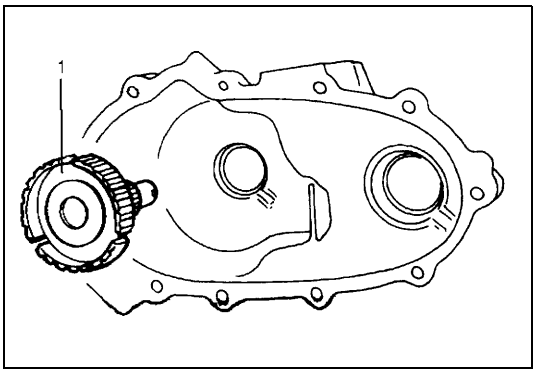

20) Remove output front shaft (1).

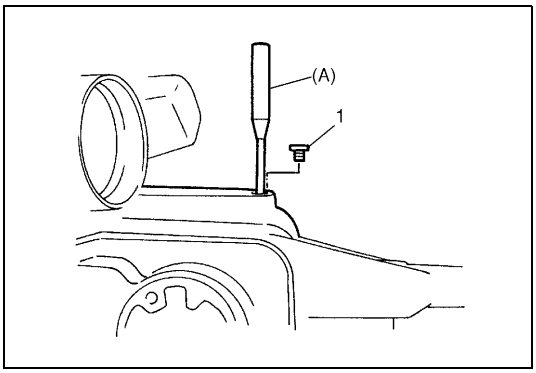

21) Remove screw (1) and drive out pin with special tool.

Special tool
(A) : 09922-85811

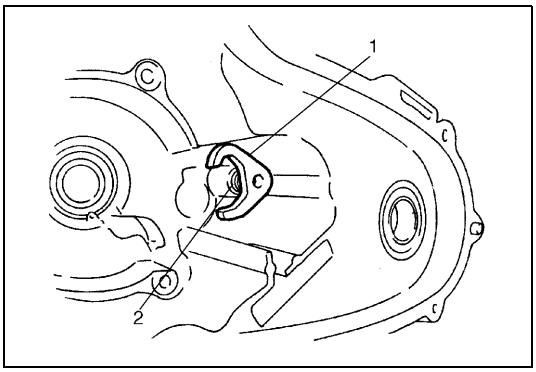

22) Remove interlock block (1) and return spring (2).

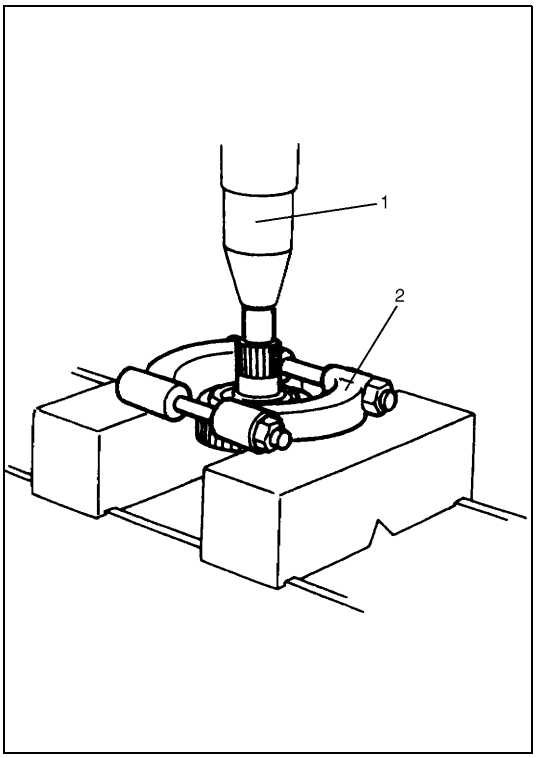

23) By using bearing puller (2) and hydraulic press (1), remove bearing from output front shaft.

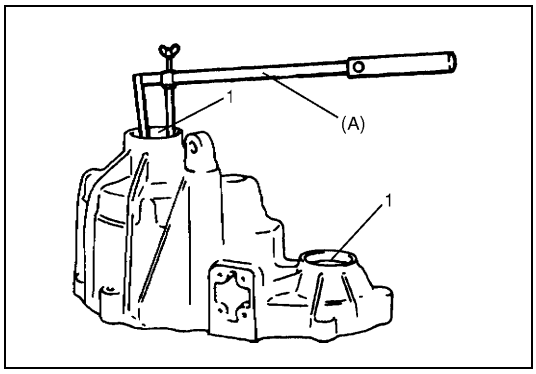

24) By using special tool, remove oil seals (1) from front case.

Special tool
(A) : 09913-50121

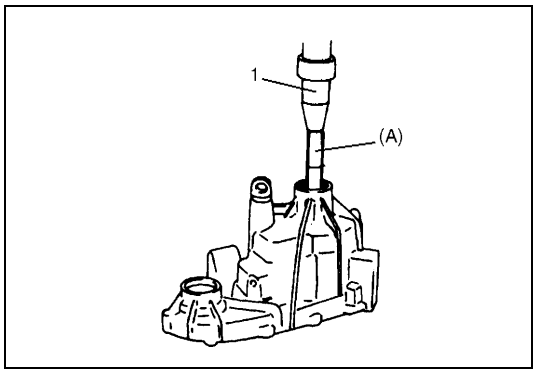

25) Remove circlip and then, remove bearing from front case.

Special tool
(A) : 09913-75830

1. Hydraulic press

INSPECTION

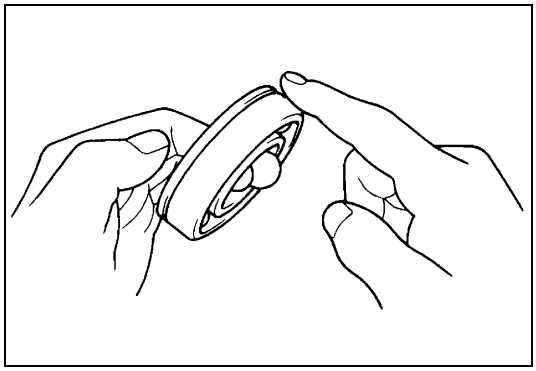

- Check each bearing for smooth rotation.
  If found abnormal, replace.
- Check needle bearing and bearing contacting surface for damage. Replace as required.

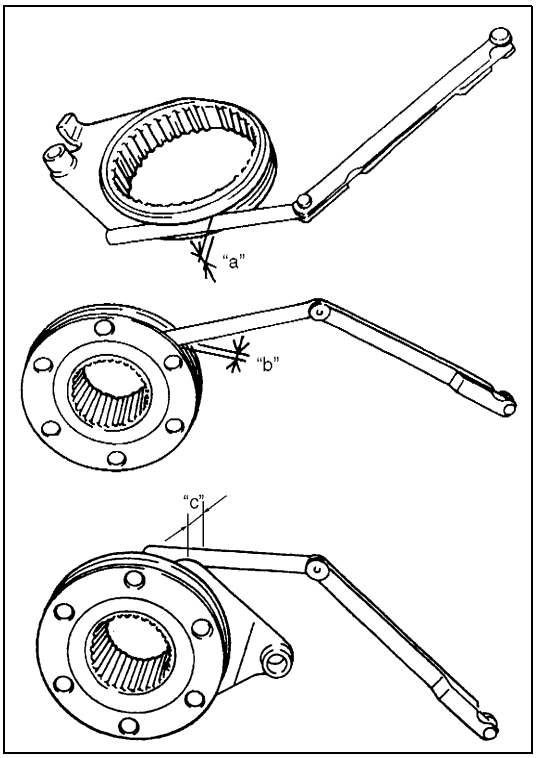

- Check gear tooth surface and shift mechanism in the same manner as with transmission.
  Correct or replace as necessary.

Especially for following parts, measure each clearance

Clearance Between Sleeve and 2-4 Shift Fork "a":
Service Limit 1.0 mm (0.039 in.)

If clearance exceeds service limit, replace sleeve and 2-4 shift fork.

Thrust Clearance Between Pinion gear and carrier "b":
Standard 0.15 – 0.55 mm (0.0059 – 0.021 in)

If clearance is out of standard value, replace planetary carrier subassembly.

Clearance Between Planetary Gear Unit and Hi-Lo Shift Fork "c" :
Service Limit 1.0 mm (0.039 in).

If clearance exceeds service limit, replace planetary sun gear, shift fork spacer and Hi-Lo shift fork.

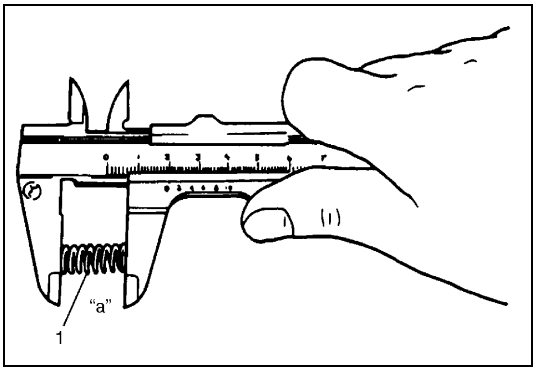

- Check each spring for distortion or breakage and change it with new one as necessary.
  Especially for locating springs, measure each free length and replace if it is below service limit

Locating spring free length "a":

Standard	**23.7 mm (0.933 in.)**
Service limit	**22.0 mm (0.866 in.)**

1. Locating spring

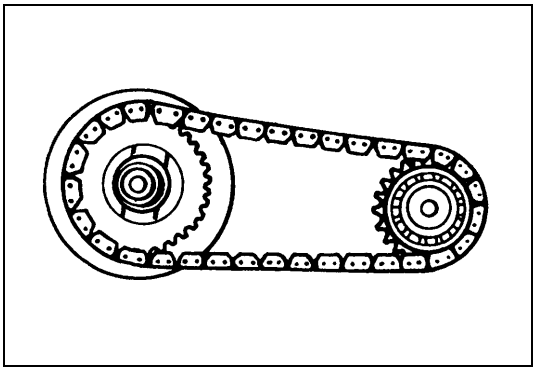

- Check drive chain and sprockets for abnormal wear or damage. Replace as required.
- Check oil seal for leakage and its lip for excessive hardness. If either is found, replace.
  Also, check corresponding surface of shaft where oil seal lip contacts. Correct or replace as necessary.

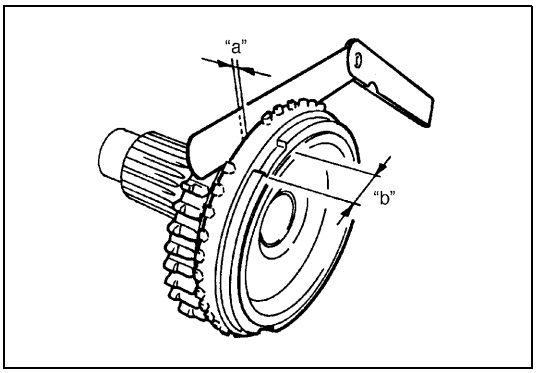

- Check clearance "a" between synchronizer ring and output front shaft, key slot width "b" in synchronizer ring and each chamfered tooth of gear and synchronizer ring and synchronizer ring and replace with new one, if necessary. Also, check gear tooth.

Clearance "a" between synchronizer ring and output front shaft
Standard : 0.85 – 1.55 mm (0.035 – 0.061 in.)
Service limit : 0.75 mm (0.030in.)

Slot width “b”
Standard : 12.3 mm (0.484 in.)
Service limit : 12.6 mm (0.496 in.)

ASSEMBLY

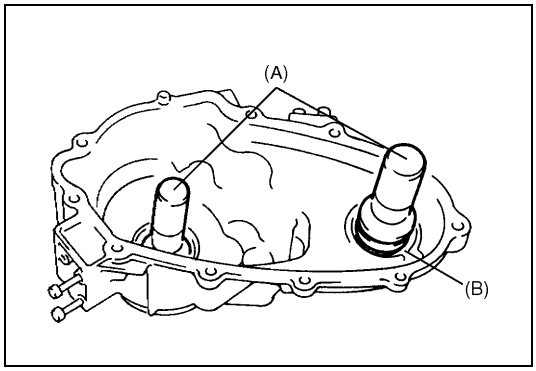

1) Install bearing to front case by using special tool and press.

Special tool
(A) : 09913-75810
(B) : 09944-66020

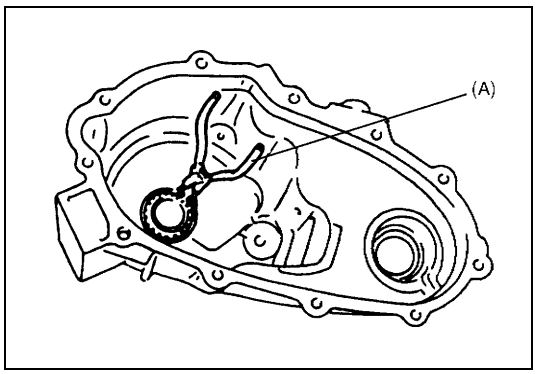

2) Fix output front shaft with circlip by using special tool.

Special tool
(A) : 09900-06108

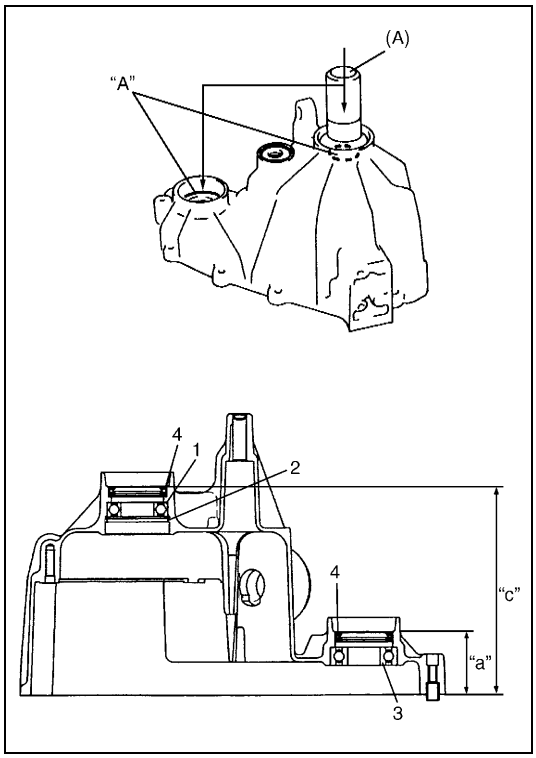

3) By using special tool and hummer, install oil seal to front case. Apply grease to each oil seal lip.

Special tool
(A) : 09913-75810

NOTE:

Refer to figure below for each oil seal installation position

“A” : Grease 99000-25010

Transfer front case oil seal installing position
“a” : 53.2 – 54.2 mm (2.1 – 2.13 in)
“c” : 179.3 – 180.3 mm (7.06 – 7.10 in)

1.	Output front bearing
2.	Circlip
3.	Input bearing
4.	Oil seal

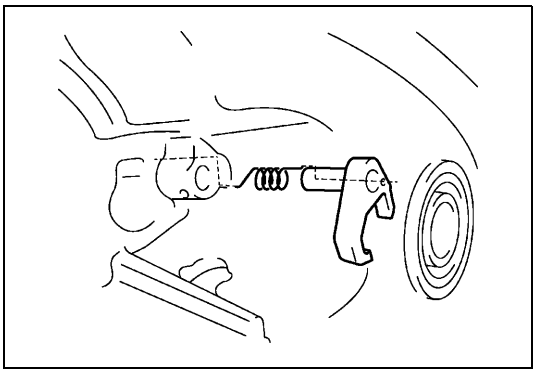

4) Install interlock block and spring as shown in figure.

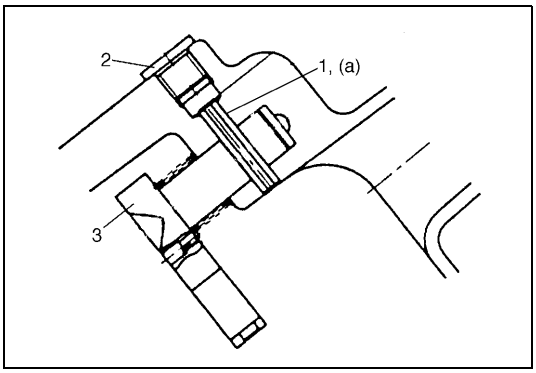

5) Drive in pin (1) a little with special tool and tighten screw (2).

Special tool
09922-85811

Tightening torque
Interlock block pin screw
(a) : 25 N·m (2.5 kg-m, 18.0 lb-ft)

3. Interlock block

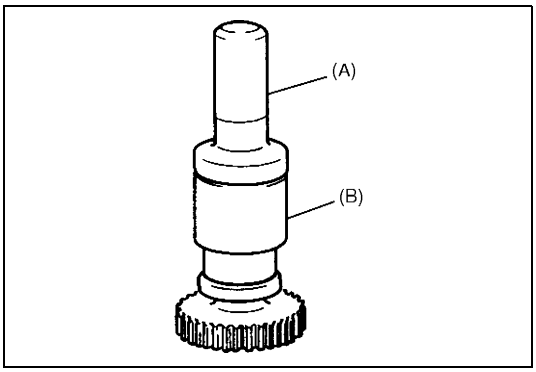

6) By using special tools and hydraulic press, install bearing to output shaft.

Special tool
(A) : 09913-75520
(B) : 09940-53111

7) Install output front shaft to front case.

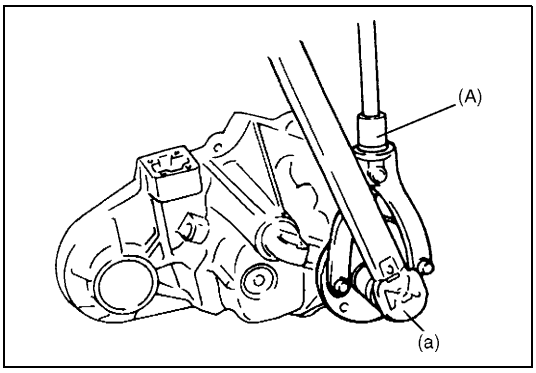

8) Install flange, tighten flange nut and caulk nut.

Special tool
(A) : 09930-40113

Tightening torque
Flange nut (a) : 130 N·m (13.0 kg-m, 94 lb-ft)

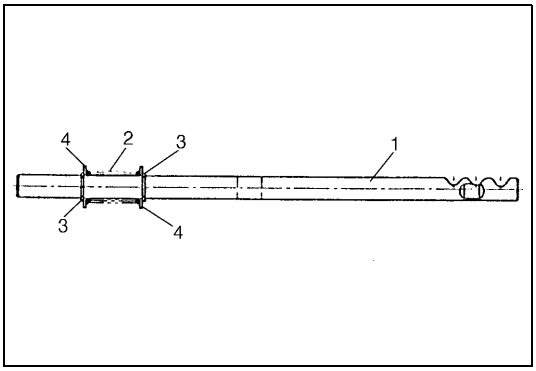

9) Install shift shaft (1) to front case with spring (2), washers (4) and snap rings (3) installed as shown in figure.

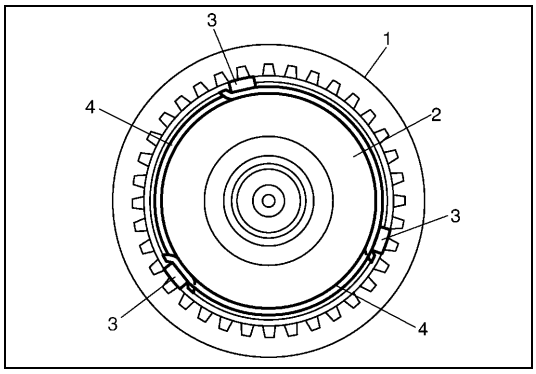

10) Assemble output rear shaft (2), sleeve (1), keys (3) and key springs (4) as shown in figure. Sleeve has specific installing direction.

NOTE:

Install key springs, deviating their openings so that they are not in line with each other.

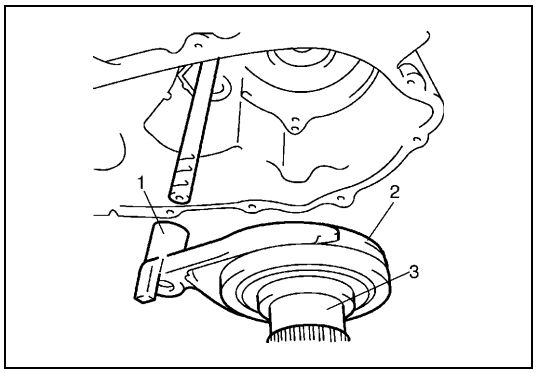

11) Install output rear shaft (3) and 2-4 shift fork (1) as an assembly.

2. Sleeve

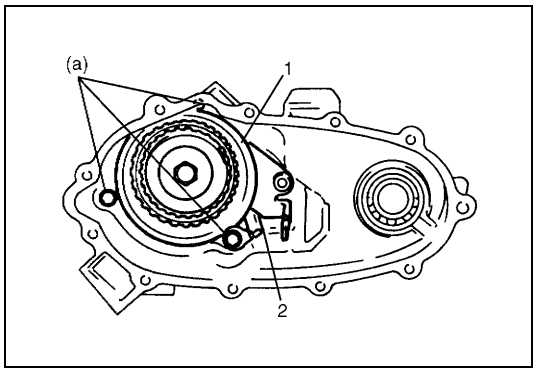

12) Install lock up plate (1) and oil gutter (2) and tighten 3 bolts.

Tightening torque
Lock up plate bolts (a) : 28 N·m (2.8 kg-m, 20.5 lb-ft)

NOTE:

Chamfer of lock up plate must face to rear side.

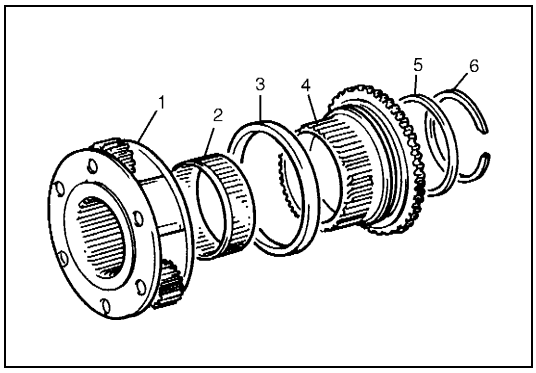

13) Assemble planetary gear assembly (1), shift fork spacer (3), needle roller bearing (2), planetary sun gear (4) and thrust washer (5) and secure then with circlip (6).

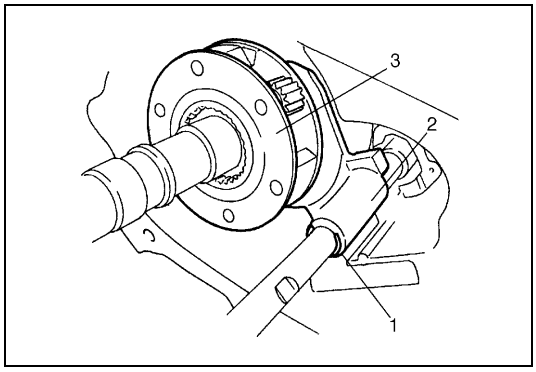

14) Install planetary gear unit (3) and Hi-Lo shift fork (2) to output rear shaft as an assembly. Fit snap ring (1) to shift shaft.

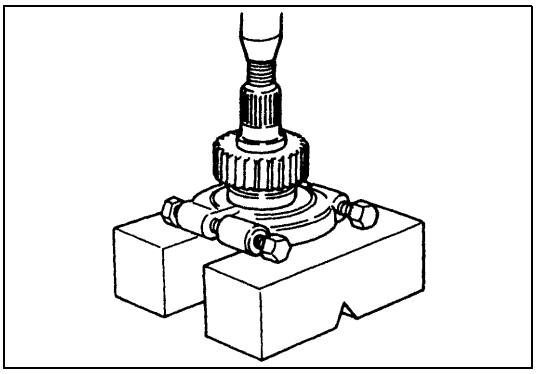

15) Install bearing to input shaft by using bearing puller and hydraulic press.

NOTE:

Fit bearing puller at inner race of bearing.

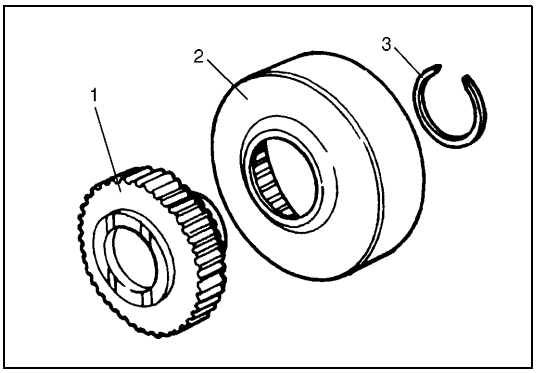

16) Assemble ring gear (2) and sprocket gear (1) and secure them with circlip (3).

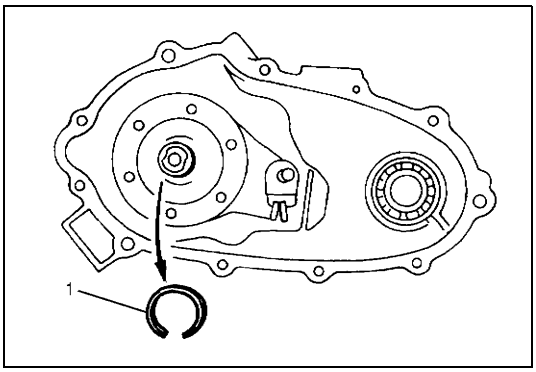

17) Fit needle roller bearing (1) to output shaft.

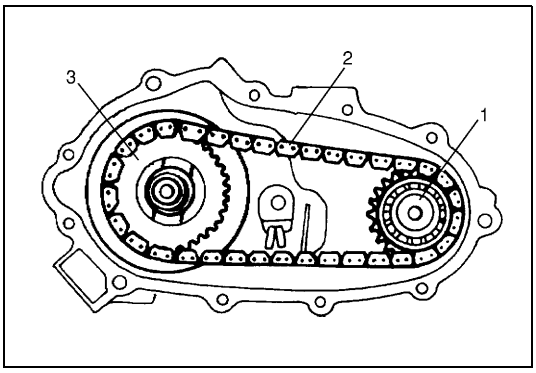

18) Install input shaft (1), sprocket gear assembly (3) and drive chain (2) to front case as an assembly.

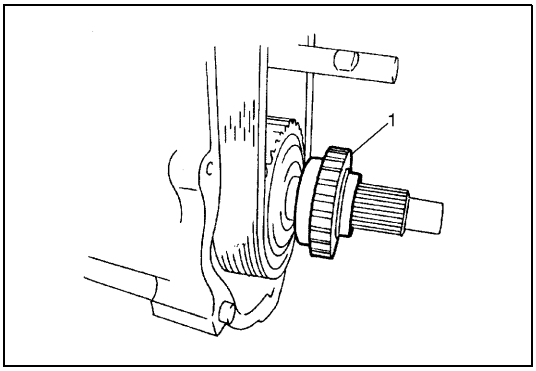

19) Install speedometer sensor rotor (1) to output shaft.

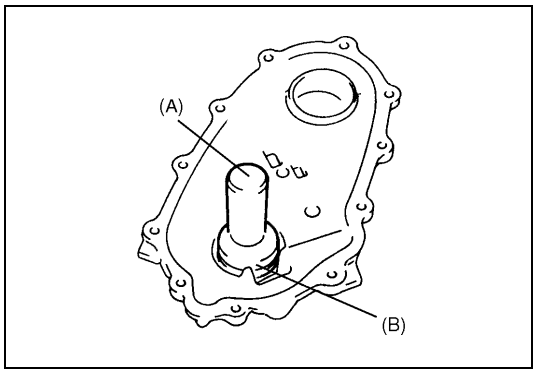

20) Install bearing to rear case by using special tool and press and fix it with circlip.

Special tool
(A) : 09913-75810
(B) : 09944-66020

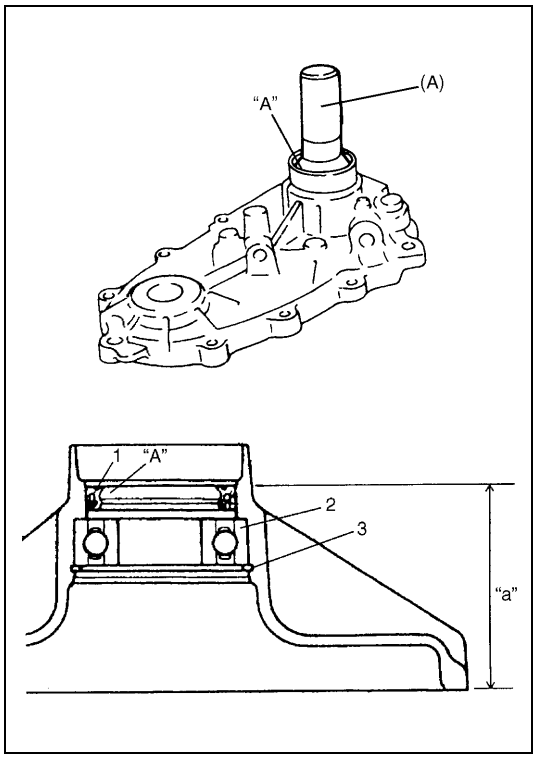

21) By using special tool and hammer, install oil seal (1) to rear case. Apply grease to oil seal lip.

NOTE:

Refer to figure for oil seal installation position.

Special tool
(A) : 09913-75810

"A" : Grease 99000-25010

Transfer rear case oil seal installing position
"a" : 69.35 ± 0.5 mm (2.730 ± 0.020 in.)

2.	Bearing
3.	Circlip

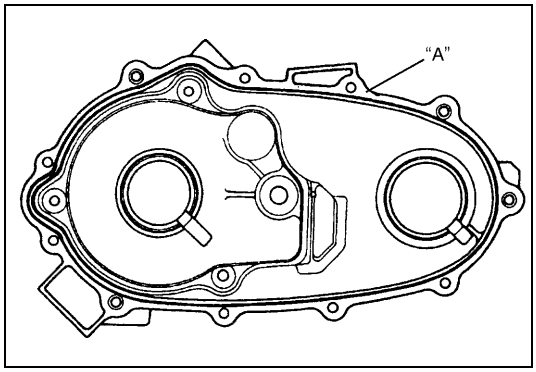

22) After cleaning mating surfaces of both cases, coat mating surface of front case with sealant evenly and put it over rear case.

"A" : Sealant 99000-31110

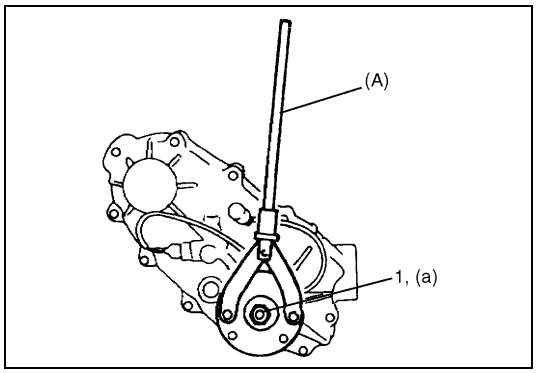

23) Align front case and rear case, then install flange, tighten flange nut (1) and calk it.

Special tool
(A) : 09930-40113

Tightening torque
Flange nut (a) : 130 N·m (13.0 kg-m, 94.0 lb-ft)

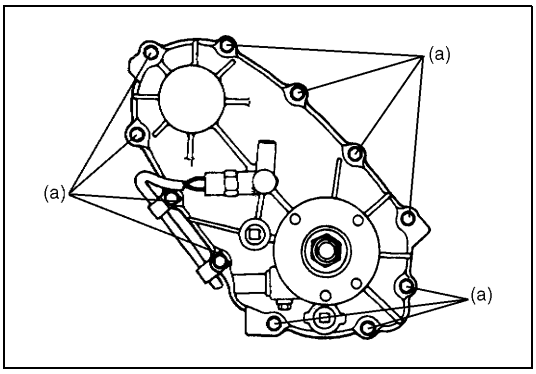

24) Tighten 11 case bolts.

Tightening torque
Transfer case bolt (a) : 18 N·m (1.8 kg-m, 13.0 lb-ft)

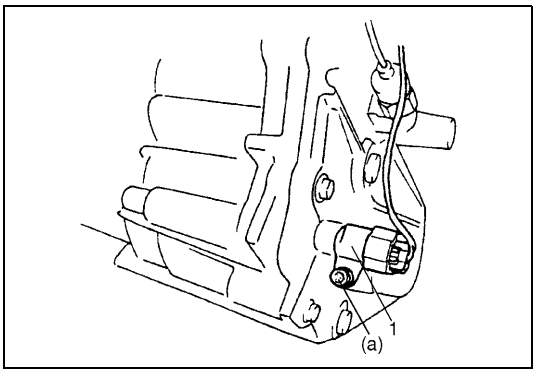

25) Install speed sensor (1).

Tightening torque
Speed sensor bolt (a) : 10 N·m (1.0 kg-m, 7.5 lb-ft)

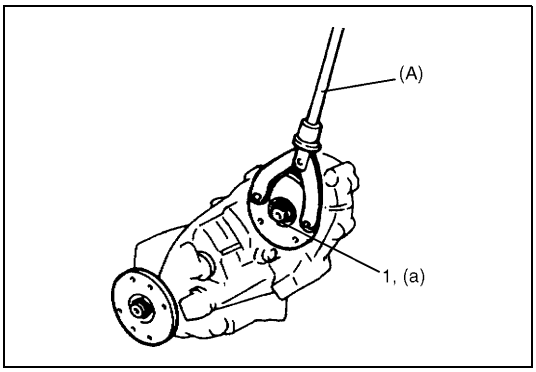

26) Install input flange, tighten flange nut (1) and calk it.

Special tool
(A): 09930-40113

Tightening torque
Flange nut (a) : 130 N·m (13.0 kg-m, 94.0 lb-ft)

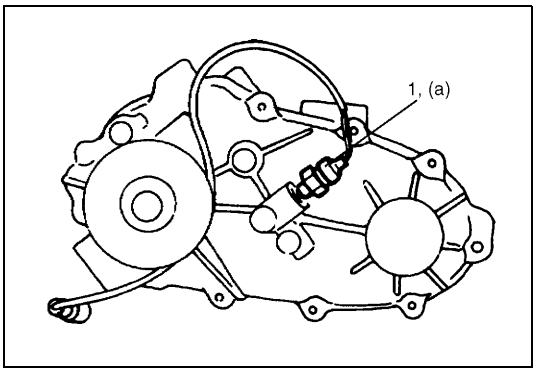

27) Install steel ball and 4WD switch (1).

Tightening torque
4WD switch (a) : 19 N·m (1.9 kg-m, 14.0 lb-ft)

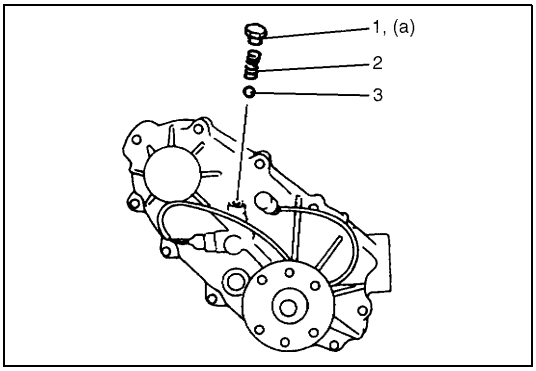

28) Install steel ball (3), locating spring (2) and locating spring bolt (1).

Tightening torque
Locating spring bolt (a) : 25 N·m (2.5 kg-m, 18.0 lb-ft)

29) Install shift and select arm and fix it spring pin.

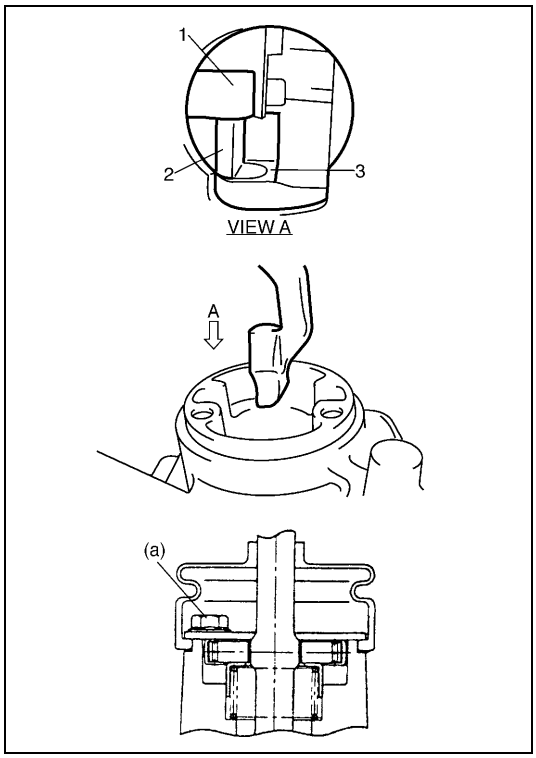

30) Set shift shaft (2), 2-4 shift fork and Hi-Lo shift fork (3) position as shown in figure. (2H shift position).
31) Install transfer shift control lever through spring and cover and fit boot to front case after tightening bolts.

Tightening torque
Shift control lever bolts (a) : 18 N·m (1.8 kg-m, 13.0 lb-ft)

1. Interlock block

Tightening Torque Specification

Fastening part	Tightening torque		
	N•m	kg-m	lb-ft
Oil filler/level and drain plug	23	2.3	17.0
Transfer mounting nut	30	3.0	22.0
Transfer mounting bracket bolt	23	2.3	17.0
Propeller shaft bolt	50	5.0	36.5
Flange nut	130	13.0	94.0
Lock up plate bolt	28	2.8	20.5
Interlock bolt	23	2.3	17.0
Transfer case bolt	18	1.8	13.0
4WD switch	19	1.9	14.0
Locating spring bolt	25	2.5	18.0
Shift control lever bolt	18	1.8	13.0
Speed sensor bolt	10	1.0	7.5
Interlock block pin screw	25	2.5	18.0

Required Service Material

Material	Recommended SUZUKI products (Part Number)	Use
Lithium grease	SUZUKI SUPER GREASE A (99000-25010)	Oil seal lip
Sealant	SUZUKI BOND NO. 1215 (99000-31110)	• Oil filter and level plug • Oil drain plug • Mating surface of front case

Special Tool

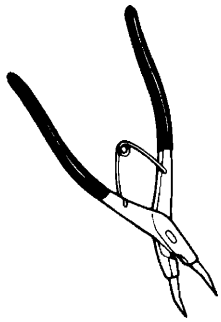 09900-06108 Snap ring plier (Closing type)	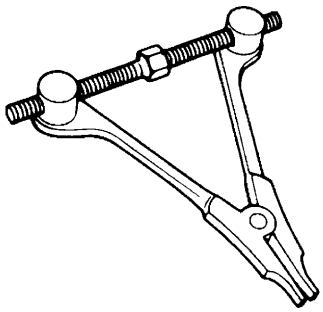 09912-34510 Separator	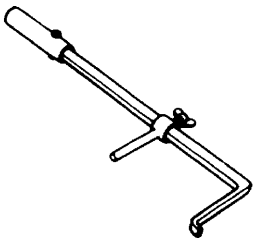 09913-50121 Oil seal remover	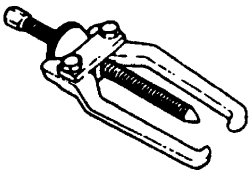 09913-65135 Bearing puller
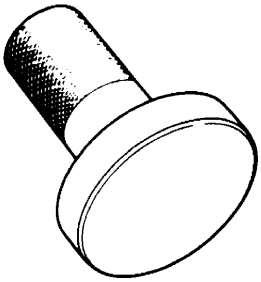 09913-75520 Bearing installer	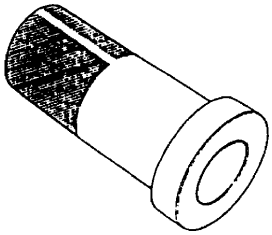 09913-75810 Bearing installer	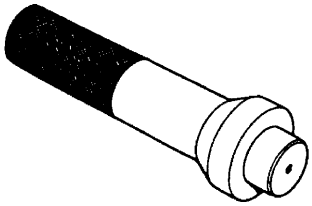 09913-75830 Bearing installer	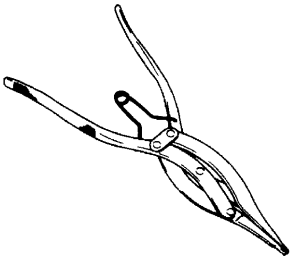 09920-76010 Snap ring plier (Opening type)
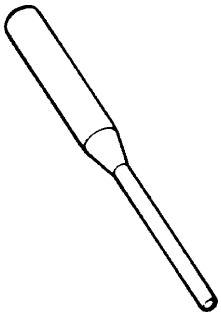 09922-85811 Pin remover	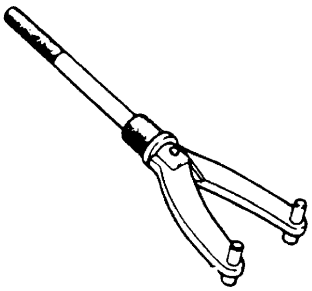 09930-40113 Flange holder	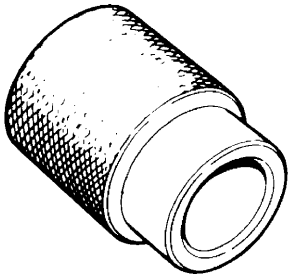 09940-53111 Differential side bearing installer	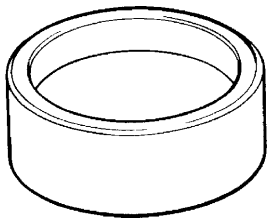 09944-66020 Bearing installer

SECTION 7E

FRONT DIFFERENTIAL

CONTENTS

General Description **7E-2**
Diagnosis **7E-3**
On-Vehicle Service **7E-4**
Oil Change 7E-4
Unit Repair Overhaul **7E-5**
Differential Unit 7E-6
Tightening Torque Specifications **7E-23**
Required Service Materials **7E-23**
Special Tools **7E-24**

General Description

The front differential assembly for 4WD model uses a hypoid bevel pinion and gear.
The differential assembly is decisive in that the drive power is concentrated there. Therefore, use of genuine parts and specified torque is compulsory. Further, because of sliding tooth meshing with high pressure between bevel pinion and gear, it is mandatory to lubricate them by hypoid gear oil.
The hypoid gears have an advantage of preventing gear noise, at the same time, they require accurate adjustment of tooth contract and backlash.

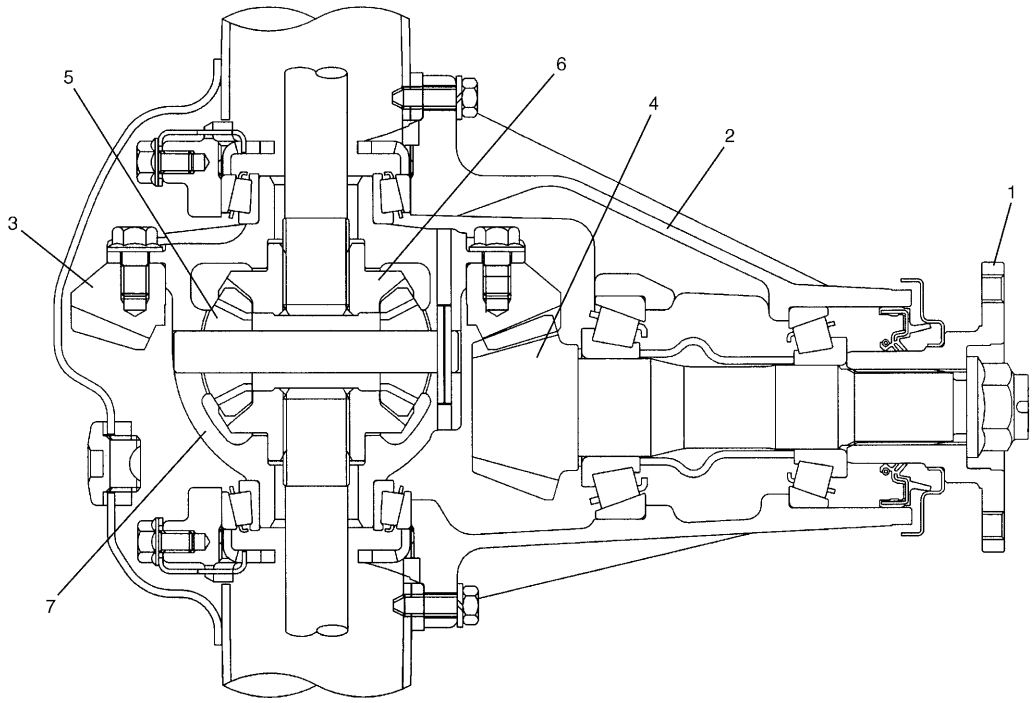

1. Companion flange	5. Differential pinion
2. Differential carrier	6. Differential side gear
3. Drive bevel gear / hypoid gear	7. Differential case
4. Drive bevel pinion / hypoid gear	

Diagnosis

Condition	Possible Cause	Correction
Gear noise	Deteriorated or water mixed lubricant	Repair and replenish.
	Inadequate or insufficient lubricant	Repair and replenish.
	Maladjusted backlash between bevel pinion and gear	Adjust and prescribed.
	Improper tooth contact in the mesh between bevel pinion and gear	Adjust or replace.
	Loose bevel gear securing bolts	Replace or retighten.
	Damaged side gear(s) or side pinion(s)	Replace.
Bearing noise	Constant noise: Deteriorated or water mixed lubricant	Repair or replenish.
	Constant noise: Inadequate or insufficient lubricant	Repair or replenish.
	Noise while coasting: Damaged bearing(s) of bevel pinion	Replace.
	Noise while turning: Damaged differential side bearing(s) or axle bearing(s)	Replace.
Oil leakage	Clogged breather plug	Clean.
	Worn or damaged oil seal	Replace.
	Excessive oil	Adjust oil level.
	Loose differential carrier bolts	Replace or retighten

On-Vehicle Service

Oil Change

1) Before oil change or inspection, be sure to stop engine and set vehicle horizontally.
2) Check oil level and existence of leakage. For checking oil level roughly, lower point of level hole can be assumed to be standard point of level. If leakage is found, correct its cause.

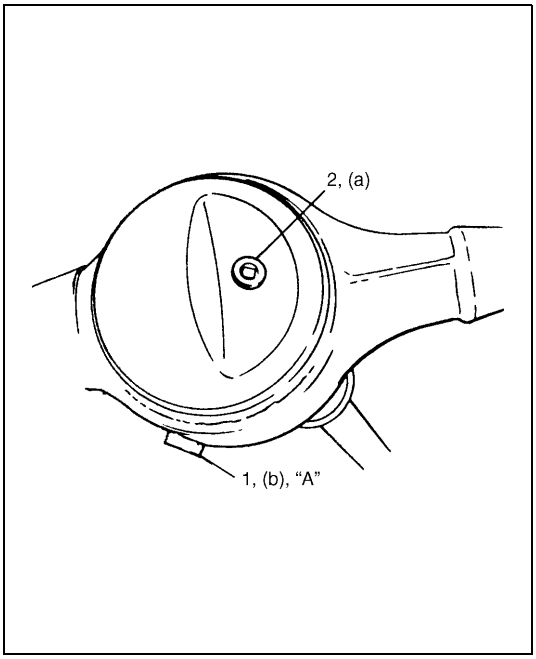

3) Remove level/filler plug (2) and drain plug (1), then drain differential oil.
4) Apply sealant to drain plug thread.

"A" : Sealant 99000-31110

5) Tighten drain plug to specified torque.

Tightening torque
Front differential oil drain plug
(b) : 27 N·m (2.7 kg-m, 19.5 lb-ft)

6) Pour proper amount of new differential oil as specified below roughly up to level hole.
7) Install new gasket to level/filler plug and tighten level/filler plug to specified torque.

Tightening torque
Front differential oil level/filler plug
(a) : 50 N·m (5.0 kg-m, 36.5 lb-ft)

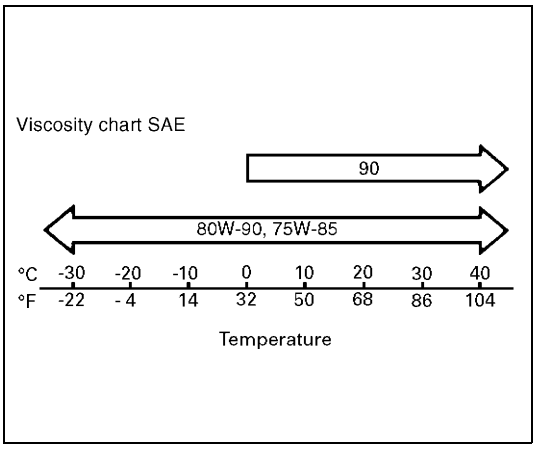

NOTE:

- **It is highly recommended to use SAE 80W-90 viscosity.**
- **Whenever vehicle is hoisted for any other service work than oil change, also be sure to check for oil leakage.**

Differential oil
: Hypoid gear oil API GL-5
For oil viscosity, refer to the chart.

Differential oil capacity
: 1.35 liters (2.9/2.3 US/Imp. pt)

Unit Repair Overhaul

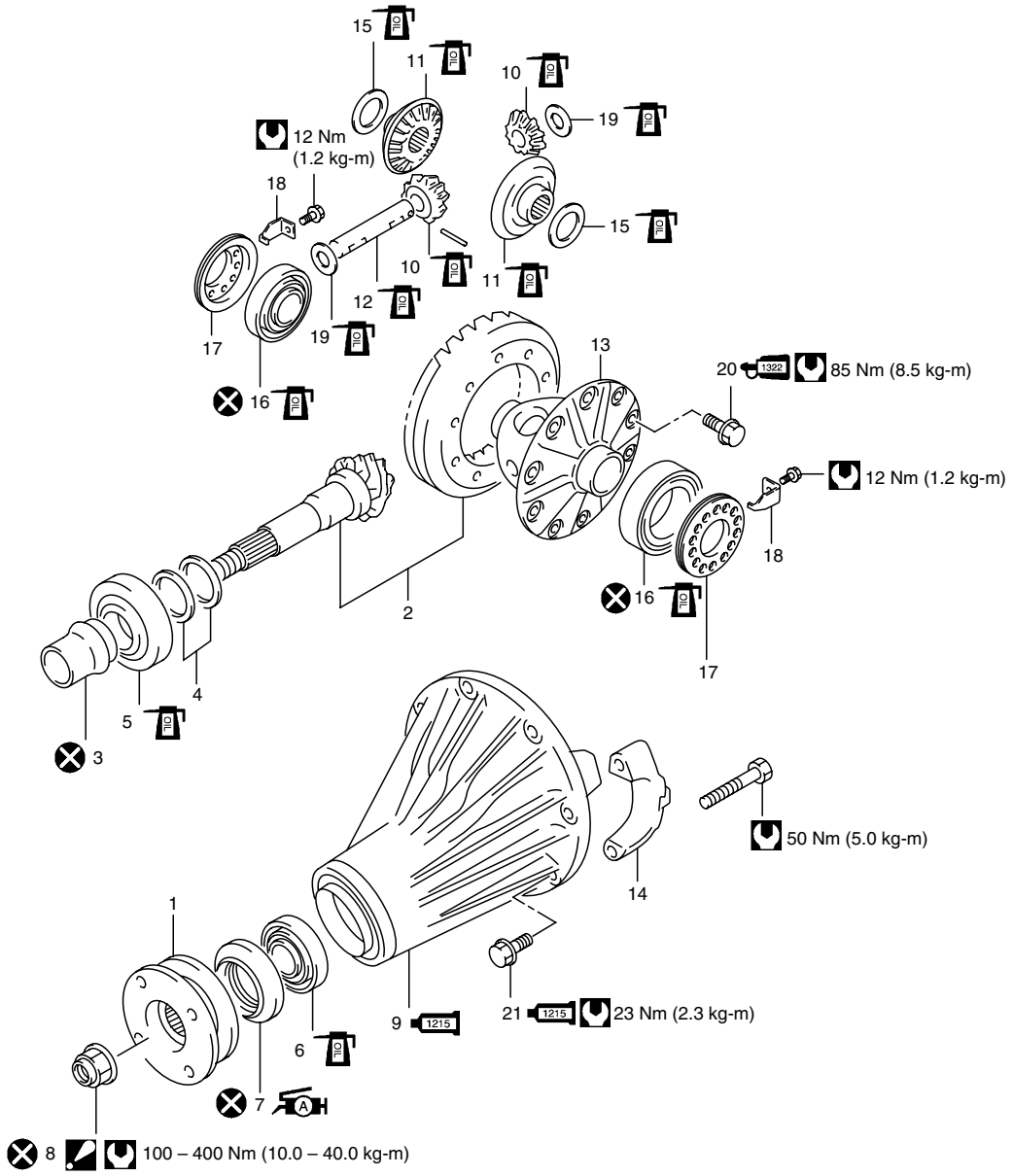

1. Companion flange	9. Differential carrier : Apply sealant 99000-31110 to mating face with axle housing.	17. Differential side bearing adjuster
2. Drive bevel / Hypoid gear set	10. Differential pinion	18. Lock plate
3. Drive bevel pinion spacer	11. Differential gear	19. Pinion washer
4. Shim	12. Pinion shaft	20. Drive bevel gear bolt : Apply thread lock cement 99000-32110 to thread.
5. Drive bevel pinion rear bearing	13. Differential case	21. Differential carrier bolt : Apply sealant 99000-31110 to thread.
6. Drive bevel pinion front bearing	14. Differential side bearing cap	Do not reuse.
7. Oil seal : Apply grease 99500-25010 to oil seal lip.	15. Thrust washer	Tightening torque
8. Flange nut : After tightening nut so as rotational torque of drive bevel pinion to be in specified torque, caulk nut securely.	16. Differential side bearing	Apply differential oil.

Differential Unit

DISMOUNTING

1) Lift up vehicle and remove wheels.

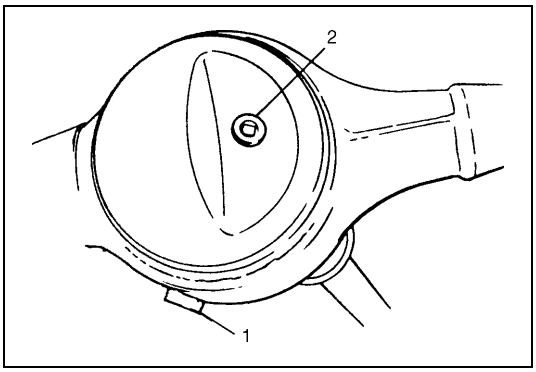

2) Drain differential oil from front axle housing referring to “Oil Change” in this section.

1.	Drain plug
2.	Level/Filler plug

3) Remove front axle shafts referring to “Front Axle Shaft / Oil Seal / Kingpin Bearing Outer Race” or “Front Axle Housing” in Section 3D.

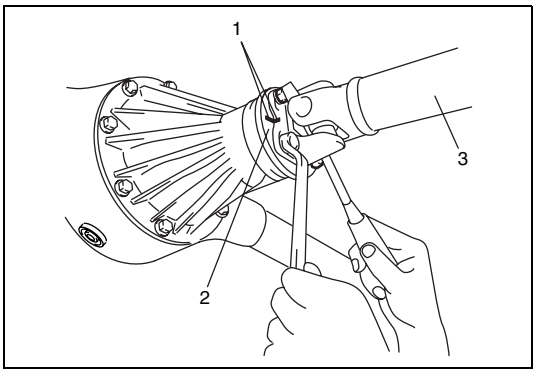

4) Before removing propeller shaft, give match marks (1) on companion flange (2) and propeller shaft (3) as shown.

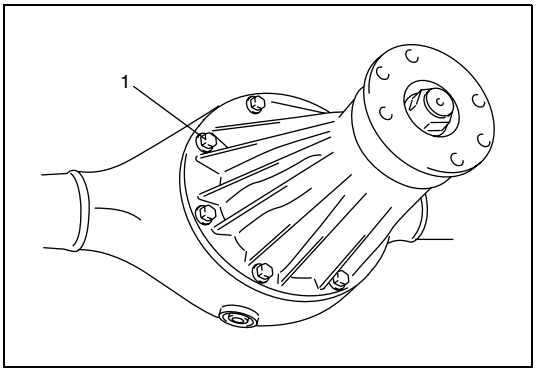

5) Remove differential carrier bolts (1) and differential assembly.

REMOUNTING

Reverse removal procedure for installation, noting the following.

Front Differential

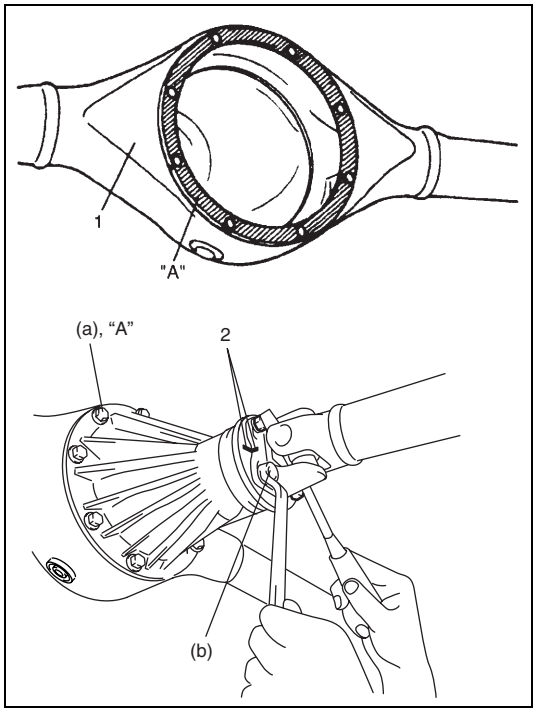

- Clean mating surface of front axle housing (1) and differential carrier and apply sealant to housing side.

"A" : Sealant 99000-31110

- Apply sealant to carrier bolts and tighten carrier bolts to specified torque.

"A" : Sealant 99000-31110

Tightening torque
Differential carrier bolts
(a) : 23 N·m (2.3 kg-m, 17.0 lb-ft)

- Install propeller shaft to companion flange aligning match marks (2) and tighten propeller shaft bolts to specified torque.

Tightening torque
Propeller shaft bolts
(b) : 50 N·m (5.0 kg-m, 36.5 lb-ft)

Front Axle Shaft

For installation of front axle shaft, refer to "Front Axle Shaft / Oil Seal / Kingpin Bearing Outer Race" or "Front Axle Housing" in Section 3D.

Differential Gear Oil

Refill differential housing with new specified differential oil. Refer to "Oil Change" in this section.

DISASSEMBLY

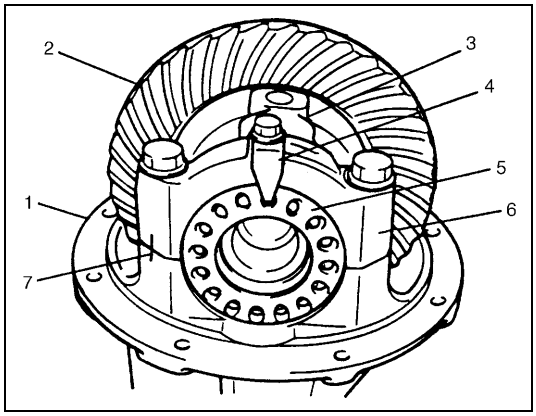

1) Put match marks (7) on differential side bearing caps (6) and differential carrier (1).
2) Remove differential side bearing lock plates (4) and differential side bearing caps by removing their bolts and then remove bearing adjusters (5), side bearing outer races and drive bevel gear (2) with differential case (3).

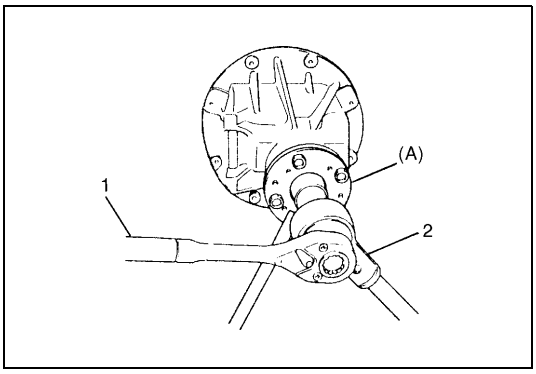

3) Hold companion flange with special tool and then remove flange nut by using power wrench (2) and socket wrench (1).

Special tool
(A) : 09922-66020

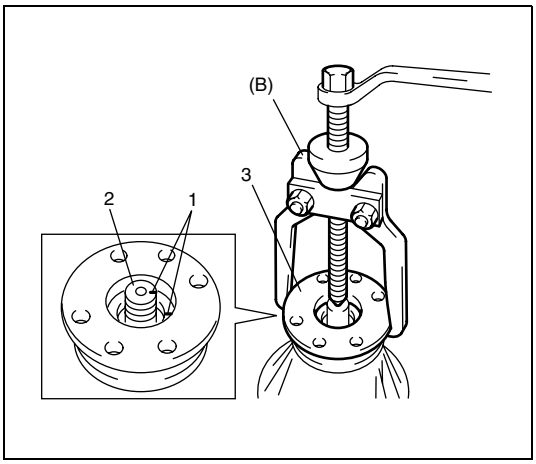

CAUTION:
Do not make mating mark on the coupling surface of the flange to prevent propeller shaft from generating vibration.

4) Make mating marks (1) on drive bevel pinion (2) and companion flange (3).
5) Remove companion flange from drive bevel pinion by using special tool if it is hard to remove.

Special tool
(B) : 09913-65135

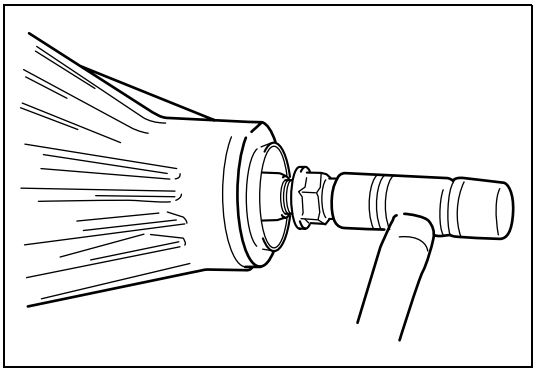

6) Remove drive bevel pinion with rear bearing, and spacer from differential carrier.
If it is hard to remove, screw an used nut into pinion and hammer on that nut with a plastic hammer but never directly on drive bevel pinion.

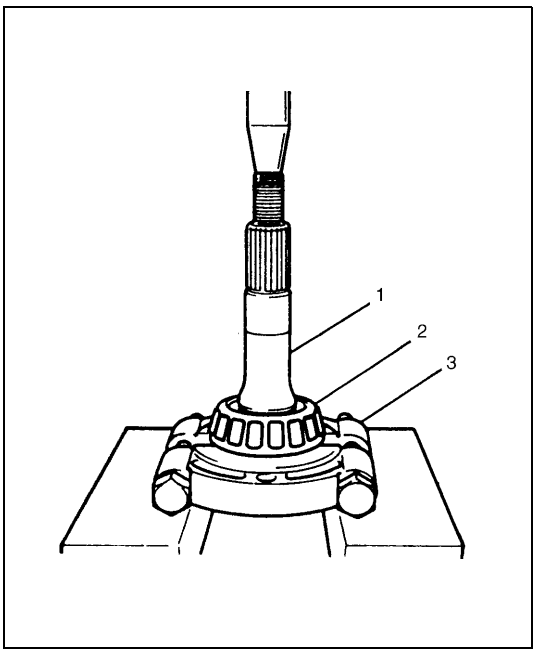

7) Remove drive bevel pinion rear bearing (2) by using bearing puller (3) and hydraulic press.

1. Drive bevel pinion

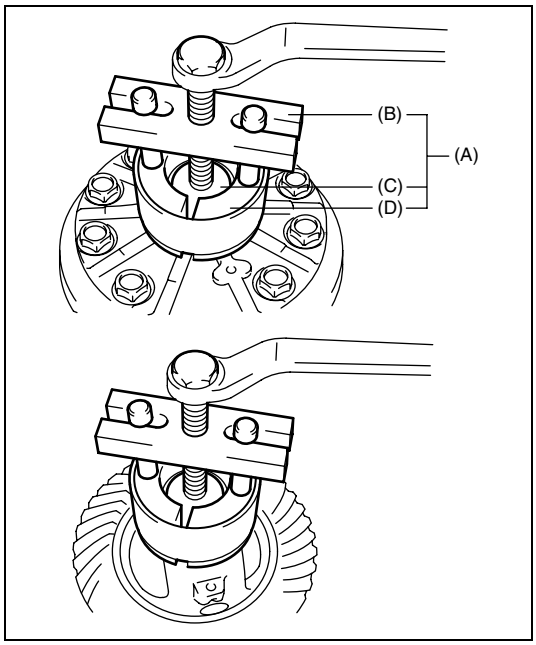

8) Using special tools, remove differential side bearings.

Special tool
(A) : 09926-37610
(B) : 09926-37610-001
(C) : 09926-37610-003
(D) : 09926-37610-002

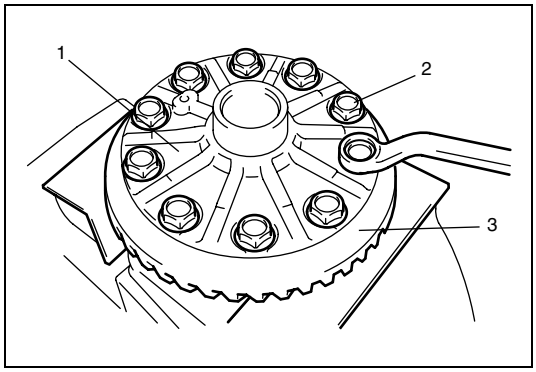

9) Hold differential case (1) with soft jawed vise.
10) Remove drive bevel gear bolts (2).
11) Remove drive bevel gear (3) from differential case.

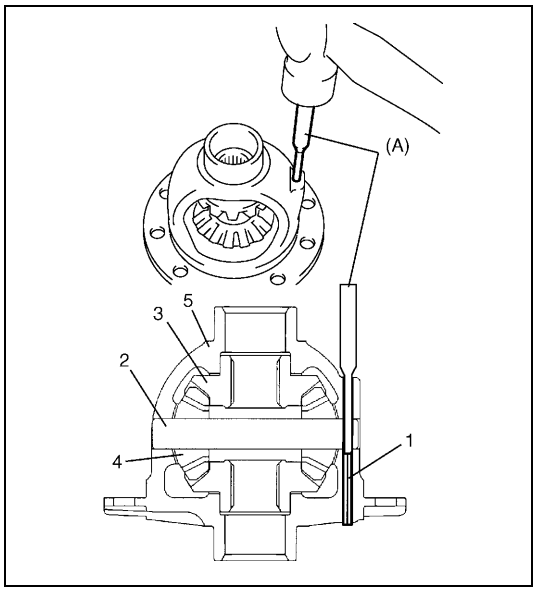

12) Push spring pin (1) out of pinion shaft with special tool and hammer.

Special tool
(A) : 09922-85811

13) Remove pinion shaft (2), differential gears (3), pinions (4) and washers from differential case (5).

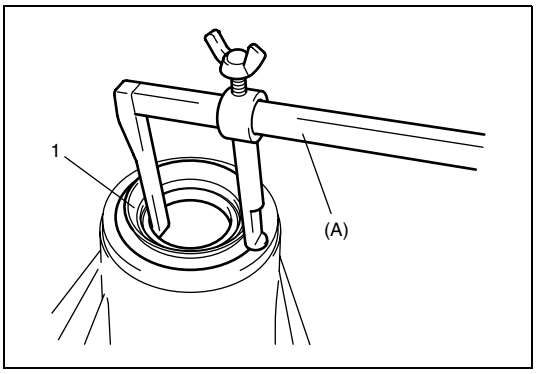

14) Remove oil seal (1) by using special tool.

Special tool
(A) : 09913-50121

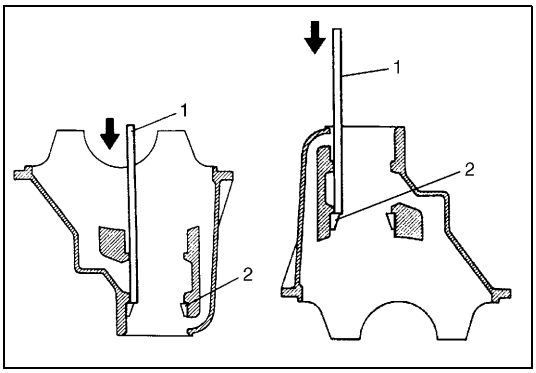

15) Drive out bevel pinion bearing outer races (2) in differential carrier by hammering metal stick (1) applied to them.

INSPECTION

- Check companion flange for wear or damage.
- Check bearings for wear or discoloration.
- Check differential carrier for cracks.
- Check drive bevel pinion and bevel gear for wear or cracks.
- Check differential gears, pinion gears and pinion shaft for wear or damage.
- Check side gear spline for wear or damage.

ADJUSTMENT AND REASSEMBLY

Judging from faulty conditions noted before disassembly and what is found through visual check of bearing and gear tooth etc. after disassembly, prepare replacing parts and proceed to reassembly according to procedures as described below.

CAUTION:

- **Drive bevel gear and pinion must be replaced as a set when either replacement becomes necessary.**
- **When replacing taper roller bearing, replace as inner race and outer race assembly.**

Drive Bevel Pinion Bearing Outer Race

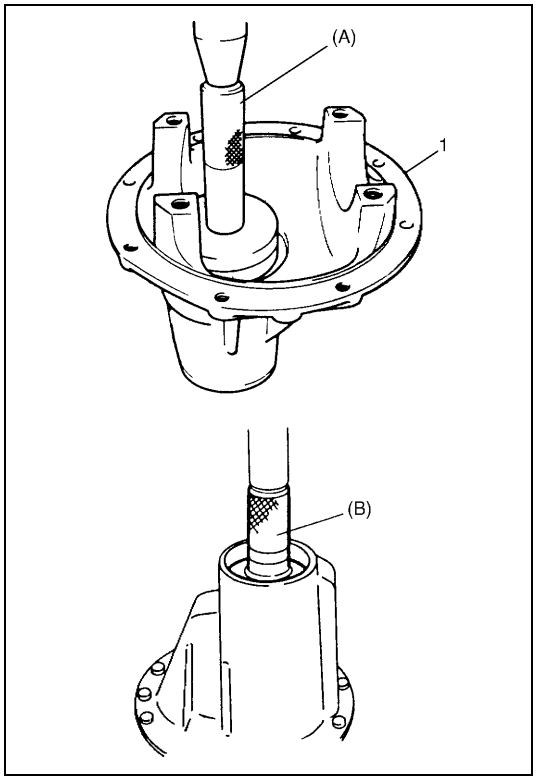

CAUTION:
Perform press-fitting carefully so as not to tilt outer race.

Install drive bevel pinion bearing outer races using special tools as shown.

Special tool
(A) : 09913-75510
(B) : 09913-75520

1.	Differential carrier

Differential Case Assembly

1) Assemble differential case assembly.
2) Measure thrust play of differential gear (2) as follows.

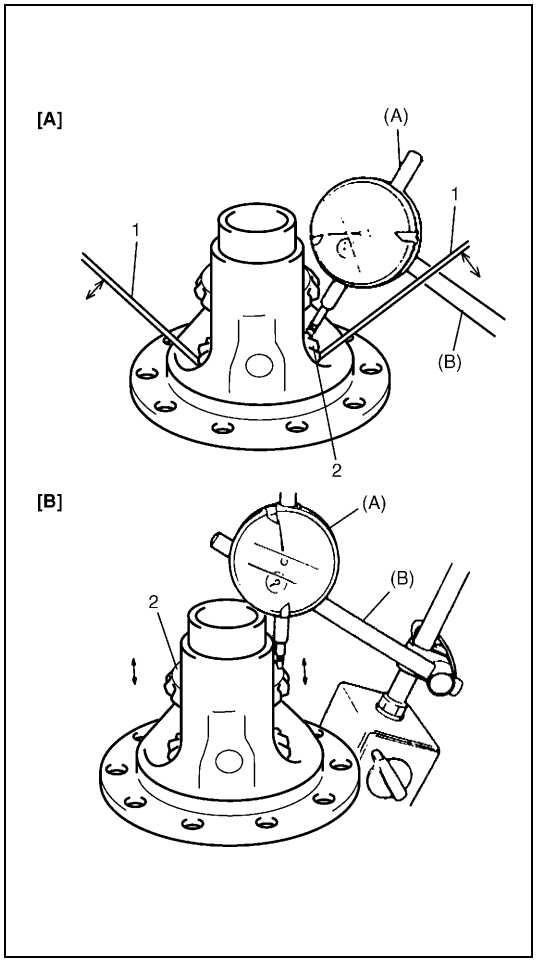

Special tool
(A) : 09900-20607
(B) : 09900-20701

Differential gear thrust play
: 0 – 0.37 mm (0 – 0.014 in.)

[A] :	Right side
[B] :	Left side

Right side
- Hold differential assembly with soft jawed vise and apply measuring tip of dial gauge to top surface of gear (2).
- Using 2 screwdrivers (1), move gear (2) up and down and read movement of dial gauge pointer.

Left side
- Using similar procedure to the above, set dial gauge tip to gear shoulder.
- Move gear (2) up and down by hand and read dial gauge.

3) If thrust play is out of specification, select suitable side washer from among the following available size, install it and check again that specified gear thrust play is obtained.

Available side washer thickness
0.9, 1.0, 1.1 and 1.2 mm (0.035, 0.039, 0.043 and 0.047 in.)

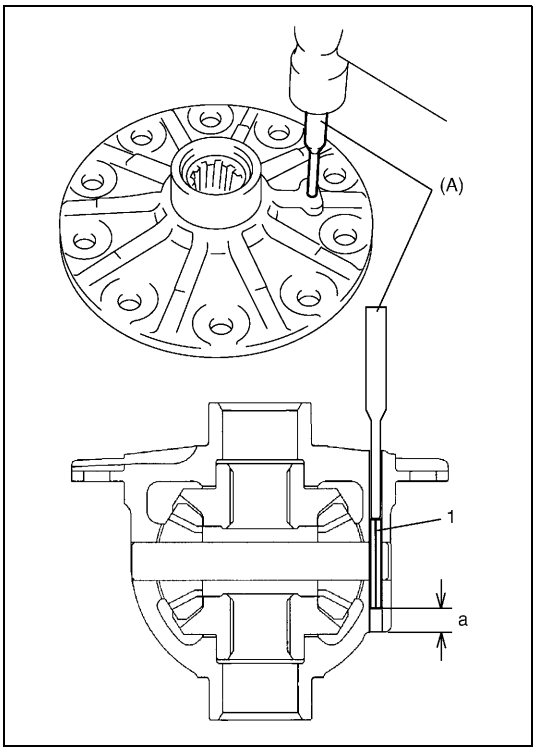

4) Drive spring pin (1) in pinion shaft till depth come to value shown below.

Special tool
(A) : 09922-85811

Spring pin installing depth
"a" : 8.5 – 9.5 mm (0.335 – 0.374 in.)

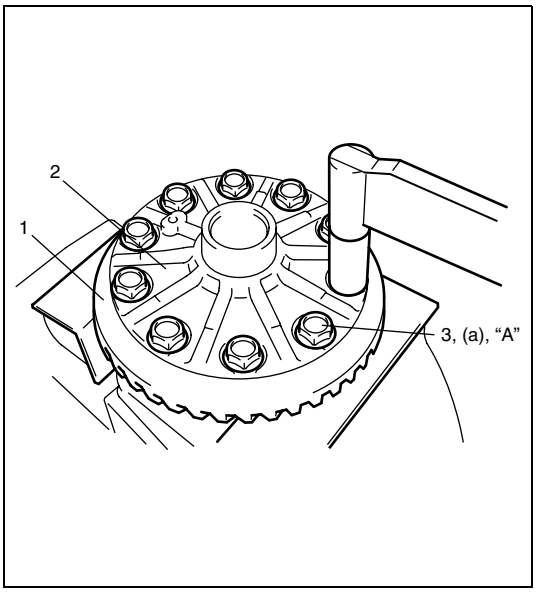

5) Put drive bevel gear (1) on differential case (2).
6) Hold differential case (2) with soft jawed vise.

CAUTION:
Use specified bolts. Use of any other bolts than specified may cause loosening of bolts and damage to drive bevel gear.

7) Apply thread lock cement to drive bevel gear bolt (3).

"A" : Cement 99000-32110

8) Tighten drive bevel gear bolt to specified torque.

Tightening torque
Drive bevel gear bolts
(a) : 85 N·m (8.5 kg-m, 61.5 lb-ft)

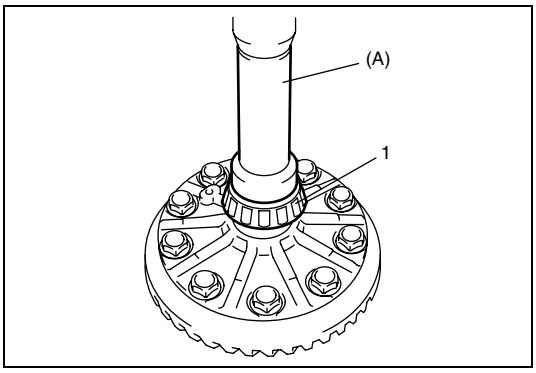

9) Install right differential side bearing (1) to differential case by using special tool and hydraulic press.

Special tool
(A) : 09913-76010

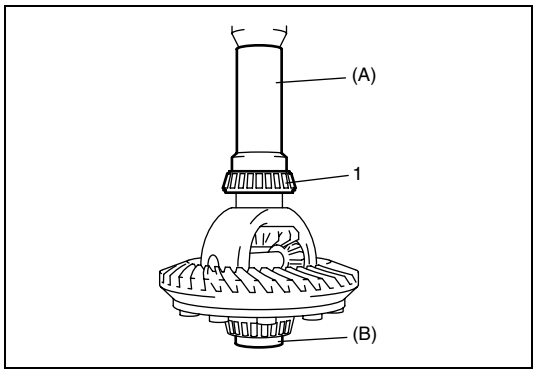

10) Install left differential side bearing (1) to differential case by using special tools and hydraulic press.

Special tool
(A) : 09913-76010
(B) : 09926-37610-003

Differential Carrier and Drive Bevel Pinion

To engage drive bevel pinion and gear correctly, it is prerequired to install drive bevel pinion to differential carrier properly by using adjusting shim.

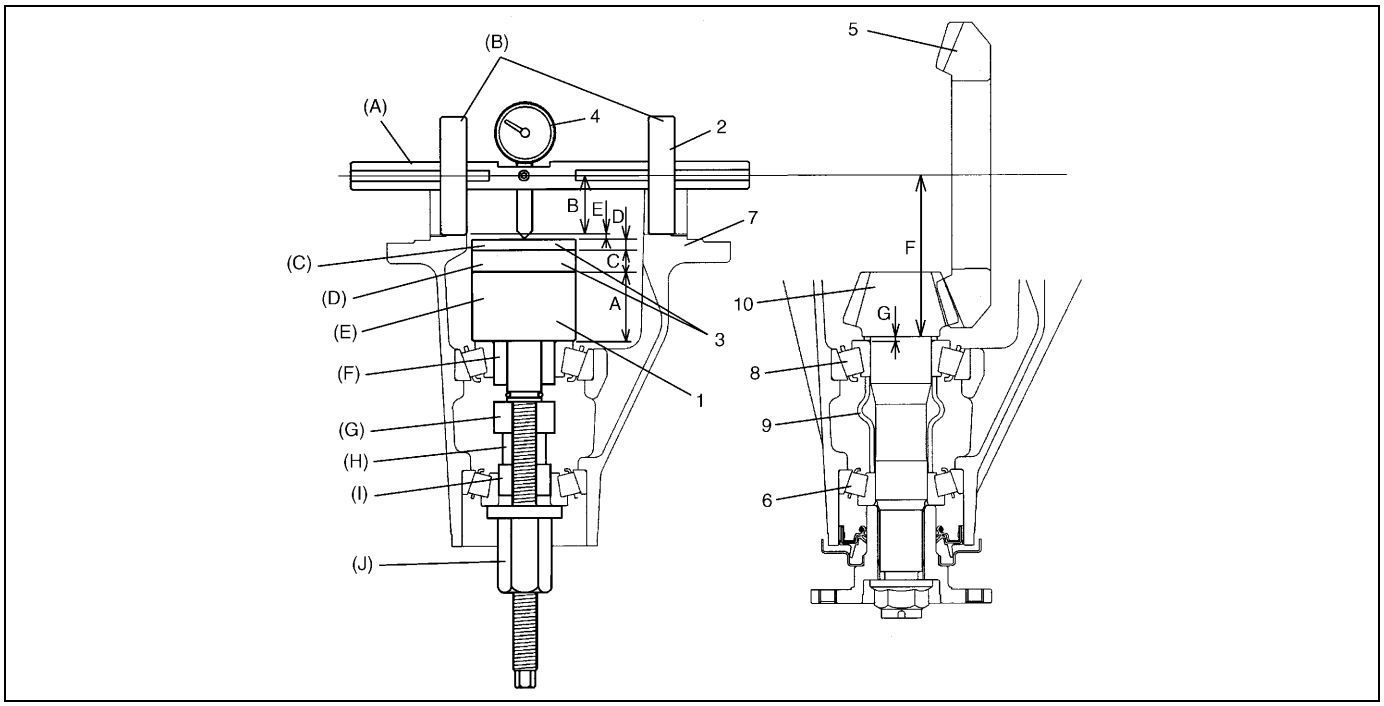

A: Dummy height of pinion form dummy (= 40 mm/1.575 in.)	F: Drive bevel pinion mounting distance (= 94 mm/3.701 in.)	5. Drive bevel gear
B: Radius of bearing form dummy with dummy shaft (= 34 mm/1.339 in.)	G: Shim thickness for mounting distance adjustment (= E)	6. Front bearing
C: Block dummy thickness (= 14 mm/0.5512 in.)	1. Pinion form dummy	7. Differential carrier
D: Block dummy thickness (= 6 mm/0.2362 in.)	2. Bearing form dummy with dummy shaft	8. Rear bearing
A+B+C+D: Mounting distance adjusting dummy total size (= 94 mm/3.701 in.)	3. Block dummy	9. Spacer
E: Measured dimension	4. Dial gauge	10. Drive bevel pinion

Special tool
(A) : 09922-76120
(B) : 09922-76220
(C) : 09922-76520
(D) : 09922-76550
(E) : 09922-76140
(F) : 09922-76410
(G) : 09922-76310
(H) : 09922-76340
(I) : 09922-76320
(J) : 09922-76150

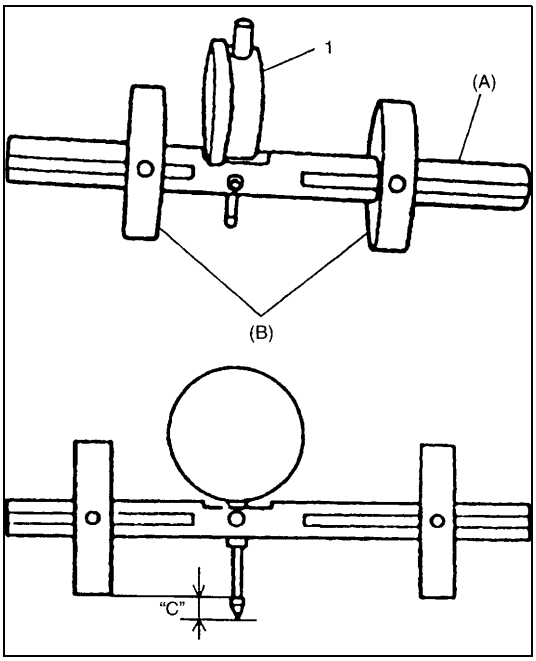

1) Assemble bearing form dummy with dummy shaft using special tools.

Special tool
(A) : 09922-76120
(B) : 09922-76220

2) Install dial gauge (1) to bearing form dummy with dummy shaft as shown in figure.

Dial gauge rod tip set distance
"c" : 2 – 3 mm (0.079 – 0.118 in.)

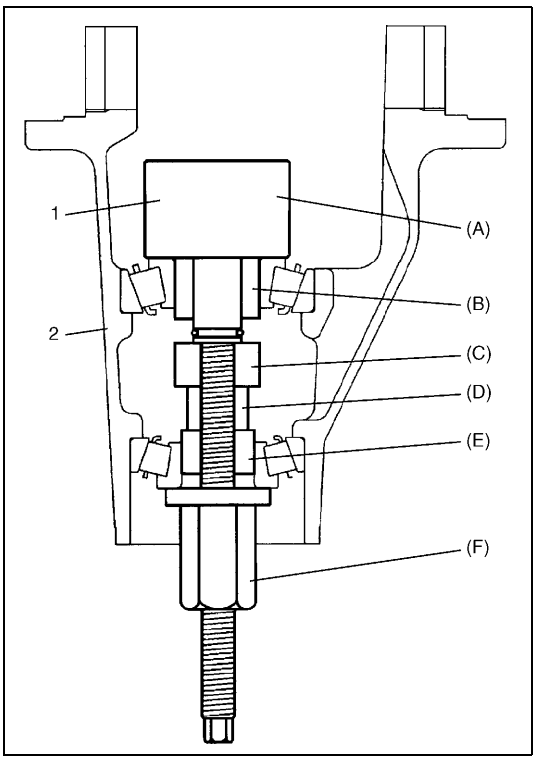

NOTE:

This installation requires no spacer or oil seal.

3) Apply differential oil to drive bevel pinion front and rear bearings.
4) Install pinion form dummy (1), the other special tools and drive bevel pinion bearings to differential carrier (2).

Special tool
(A) : 09922-76140
(B) : 09922-76410
(C) : 09922-76310
(D) : 09922-76340
(E) : 09922-76320
(F) : 09922-76150

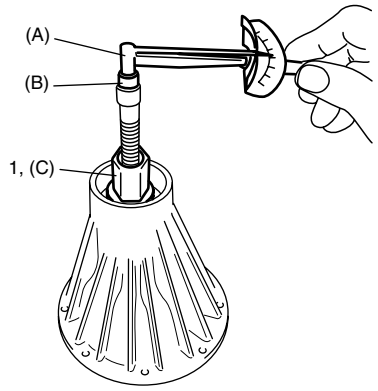

NOTE:

Before taking measurement, check for rotation by hand more than 15 revolutions.

5) Tighten special tool (1) so that specified bearing preload is obtained.

Special tool
(A) : 09900-23107
(B) : 09915-24550
(C) : 09922-76150

Drive bevel pinion bearing preload (at 50 rpm)
: 0.9 – 1.7 N·m (9.0 – 17.0 kg-cm, 7.8 – 14.7 lb-in.)

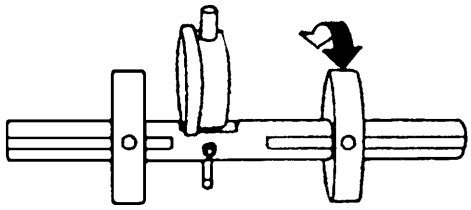

NOTE:

- **When setting dial gauge to bearing form dummy with dummy shaft, tighten screw lightly. Be careful not to overtighten it, which will cause damage to dial gauge.**
- **With dial gauge set, turn dummy back and forth by hand a couple of times and attain accurate zero adjustment.**
- **It is desirable that short pointer indicates beyond 2 mm when long one is at zero.**

6) Set dial gauge to bearing form dummy with dummy shaft and make zero adjustment on surface plate.

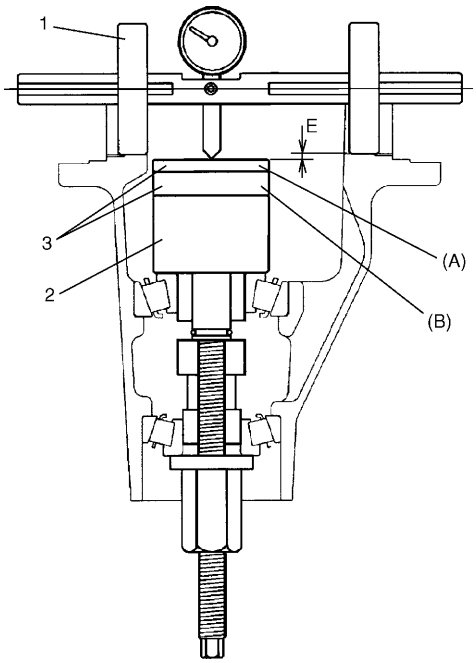

7) Put block dummies (3) on pinion form dummy (2).

Special tool
(A) : 09922-76520
(B) : 09922-76550

NOTE:

- **Repeat turning back and forth of dummy and measure distance as far as top surface of block dummy accurately.**
- **When dial gauge measuring tip extends from zero position, pointer turns counterclockwise.**
- **Measured value may exceed 1 mm. Therefore, it is also necessary to know reading of short pointer.**

8) Place zero-adjusted bearing form dummy with dummy shaft (1) and dial gauge set on block dummies (3) and take measurement between zero position and extended dial gauge measuring tip.
9) Obtain adjusting shim thickness by using measured value by dial gauge in the following equation.

Necessary shim thickness	=	Dial gauge measured value E

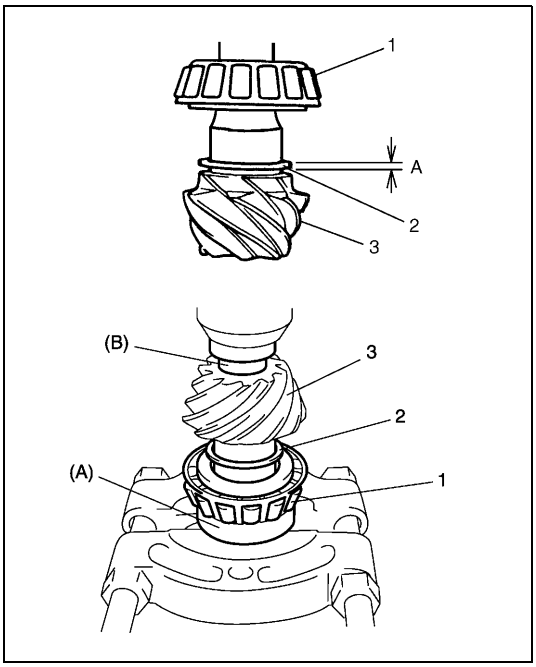

10) Select adjusting shim(s) (2) closest to measured value from among following available sizes.
11) Put shim(s) in place and press-fit drive bevel pinion rear bearing (1) to drive bevel pinion (3) by using special tools and hydraulic press.

Special tool
(A) : 09924-07730
(B) : 09926-37610-003

Available shim thickness
: 0.30, 1.00, 1.03, 1.06, 1.09, 1.12, 1.15, 1.18, 1.21, 1.24, 1.27 and 1.30 mm (0.012, 0.039, 0.041, 0.042, 0.043, 0.044, 0.045, 0.046, 0.048, 0.049, 0.050 and 0.051 in.)

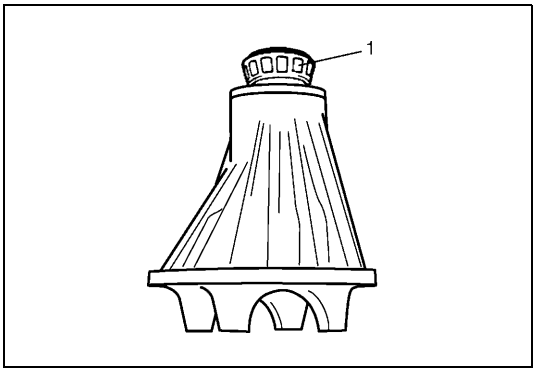

12) Apply differential oil to drive bevel pinion front bearing (1).
13) Install drive bevel pinion front bearing in differential carrier.

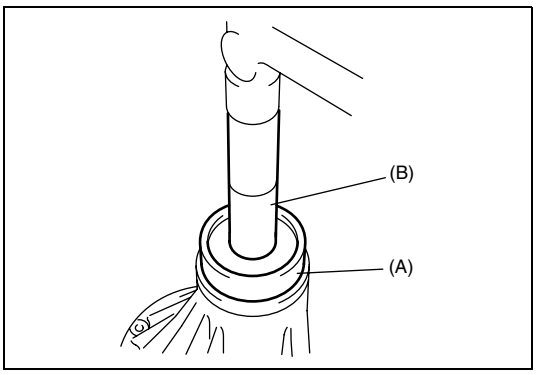

14) Apply grease to oil seal lip.

Grease 99000-25010

15) Install oil seal in differential carrier by using special tool.

Special tool
(A) : 09944-66010
(B) : 09924-74510

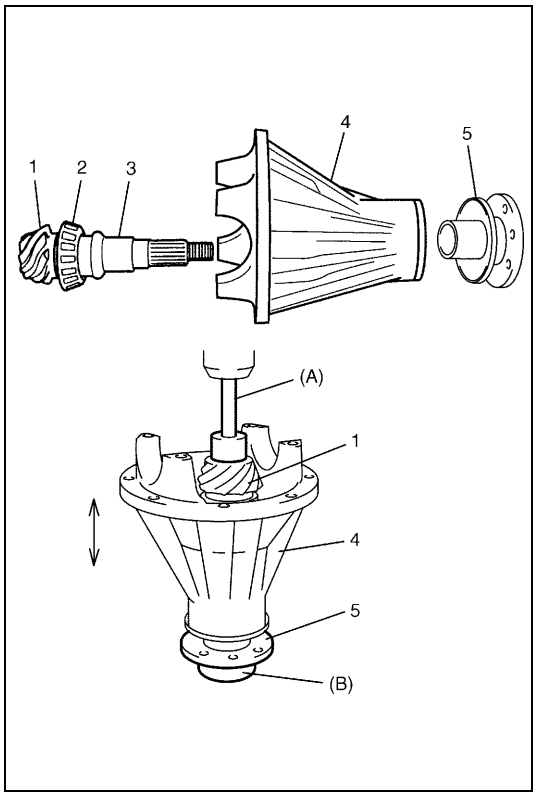

CAUTION:

- **Use new drive bevel pinion spacer, otherwise bearings may be damaged.**
- **Take care not to give press force to drive bevel pinion spacer, otherwise spacer and bearings may be damaged.**

16) Apply differential oil to drive bevel pinion rear bearing (2).
17) Install drive bevel pinion (1), spacer (3) and companion flange (5) into differential carrier (4).
18) Until bearing axial clearance come to 1 – 2 mm (0.039 – 0.079 in.), press-fit drive bevel pinion (1) to companion flange (5) by using special tools and hydraulic press.

NOTE:

Bearing axial clearance can be confirmed by shaking differential carrier (4) in the direction shown in figure.

Special tool
(A) : 09925-58210
(B) : 09951-46010

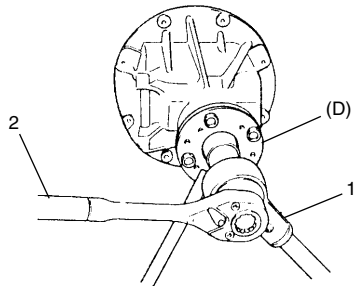

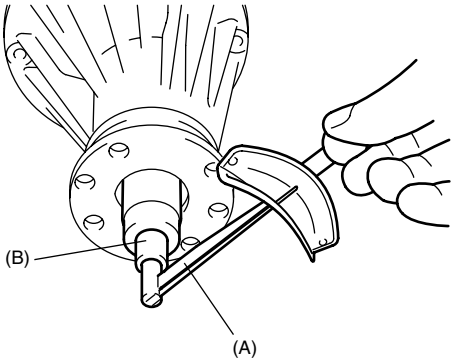

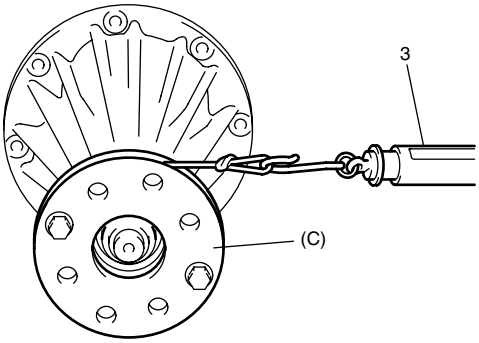

NOTE:

- **Before taking measurement, check for smooth rotation by hand.**
- **Preload of drive bevel pinion bearings is adjusted by tightening flange nut to deform drive bevel pinion spacer.**
  Therefore, be sure to use a new spacer for adjustment and tighten flange nut step by step and check for preload by measuring starting torque as often as tightening to prevent over crushing of spacer.
  If preload exceeds specification given below during adjustment, replace spacer and repeat preload adjustment procedure. Attempt to decrease preload by loosening flange nut will not do.
- **For measuring preload of drive bevel pinion bearings, turn drive bevel pinion at about 50 rpm is required.**
- **Make a record preload of drive bevel pinion bearings because the preload is used for checking composite preload of drive bevel pinion bearings and differential side bearings.**

19) Tighten flange nut gradually with special tools so that preload of drive bevel pinion is in specification.

Tightening torque
Flange nut
: 100 – 400 N·m (10 – 40 kg-m, 72 – 289 lb-ft)

Preload of drive bevel pinion bearings / Starting torque of drive bevel pinion when measuring by torque wrench
: 0.9 – 1.7 N·m (9.0 – 17.0 kg-cm, 7.8 – 14.7 lb-in.)

Preload of drive bevel pinion bearings / Starting torque of drive bevel pinion when measuring by spring balance
: 18 – 34 N (1.8 – 3.4 kg, 4.0 – 7.5 lb)

Special tool
(A) : 09900-23107
(B) : 09915-24550
(C) : 09922-75222
(D) : 09922-66020

1.	Power wrench (4 – 10 magnification)
2.	Socket wrench
3.	Spring balance

Differential Assembly

1) Place differential side bearing outer races on their respective bearings. Used left and right outer races are not interchangeable.
2) Install differential case assembly in differential carrier.
3) Install differential side bearing adjusters on their respective carrier, making sure adjuster are threaded properly.

NOTE:

Screw in each adjuster till it contacts bearing outer race so that outer race is prevented from inclining.

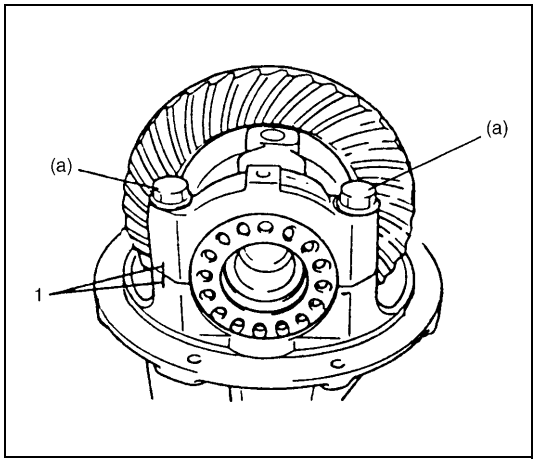

4) Align match marks (1) on differential side bearing cap and carrier. Screw in two side bearing cap bolts two or three turns and press down bearing cap by hand.

NOTE:

If bearing cap does not fit tightly on carrier, side bearing adjuster is not threaded properly. Reinstall adjuster.

5) Tighten bearing cap bolts to provisional torque.

Tightening torque
Bearing cap bolts
(a) : 15 N·m (1.5 kg-m, 11.0 lb-ft)

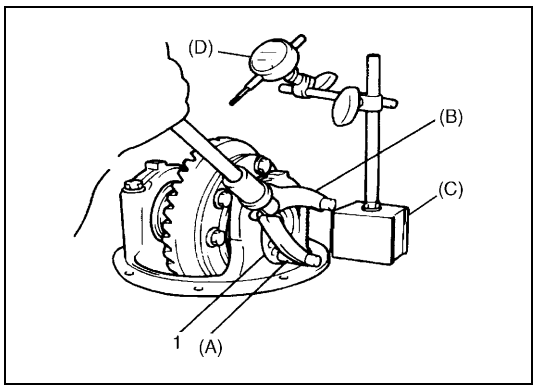

6) Tighten both differential side bearing adjusters (1) so as to obtain specified gear backlash and at the same time, obtain preload of differential side bearing.

Special tool
(A) : 09930-40120
(B) : 09930-40113
(C) : 09900-20701
(D) : 09900-20607

Bevel gear backlash : 0.10 – 0.20 mm (0.0039 – 0.0078 in.)

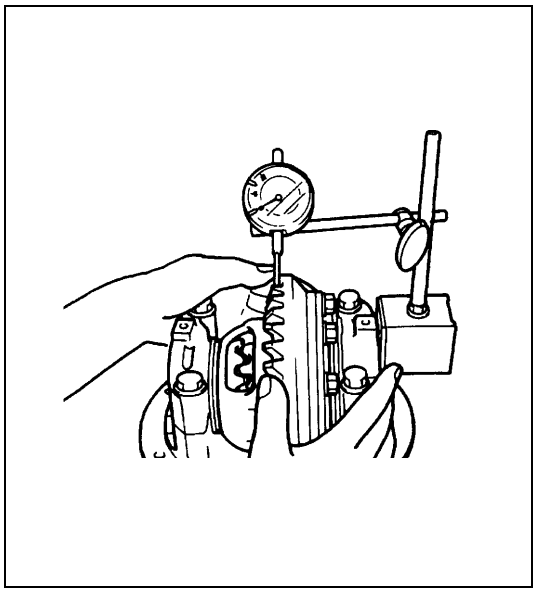

NOTE:

- **Be sure to apply measuring tip of dial gauge at right angles to convex side of tooth.**
- **Measure at least 4 points on drive bevel gear periphery.**
- **As a practical measure following would be recommended to obtain specified backlash and differential side bearing preload at the same time.**
  - **To increase or decrease backlash for adjustment, displace drive bevel gear toward or away from drive bevel pinion by running in one adjuster and running out the other adjuster by equal amount.**
  - **Tighten both adjusters further by one notch at a time.**

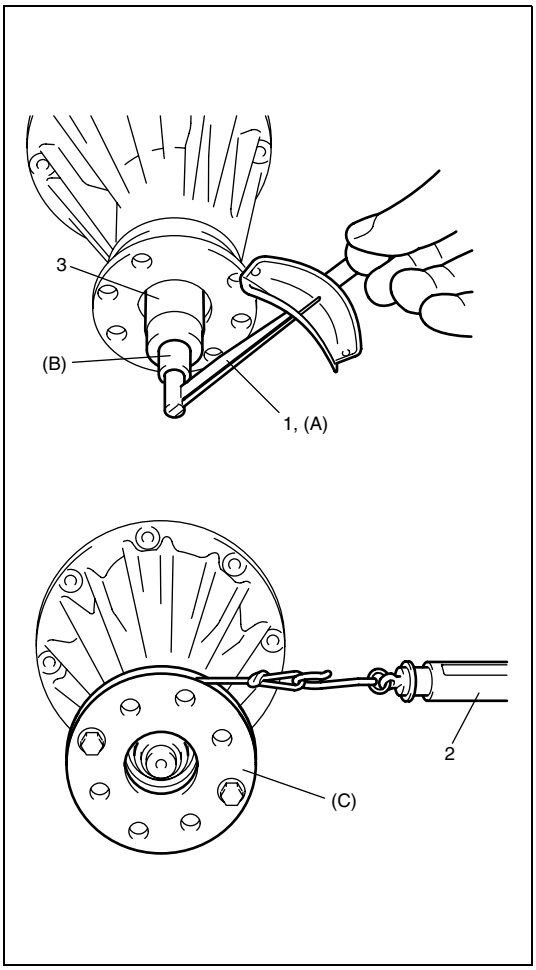

7) Measure composite preload of drive bevel pinion bearings and differential side bearings with torque wrench (1) or spring balance (2).
8) Calculate preload of differential side bearings by using the following equation.

Preload of differential side bearings	=	Composite preload	–	Preload of drive bevel pinion bearings

If preload of differential side bearings is specification shown below, adjust preload by tightening or loosening side bearing adjusters.

Preload of differential side bearings / Starting torque of drive bevel pinion when measuring by torque wrench
: 0.2 – 0.3 N·m (2.0 – 3.0 kg-cm, 1.7 – 2.6 lb-in.)

Preload of differential side bearings / Starting torque of drive bevel pinion when measuring by spring balance
: 4.0 – 6.0 N (0.4 – 0.6 kg, 0.9 – 1.3 lb)

Special tool
(A) : 09900-23107
(B) : 09915-24550
(C) : 09922-75222

3. Socket

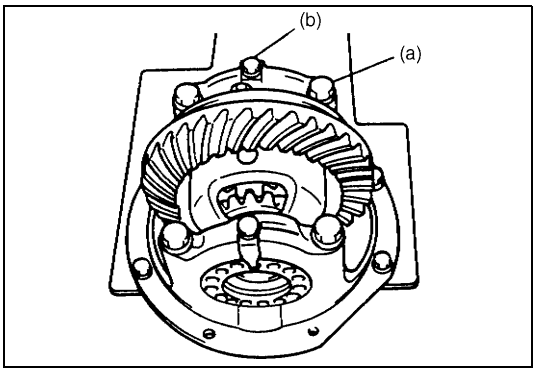

9) Torque bearing cap bolts to specified torque and install bearing lock plates.

Tightening torque
Bearing cap bolts
(a) : 50 N·m (5.0 kg-m, 36.5 lb-ft)
Lock plate bolts
(b) : 11.5 N·m (1.15 kg-m, 8.5 lb-ft)

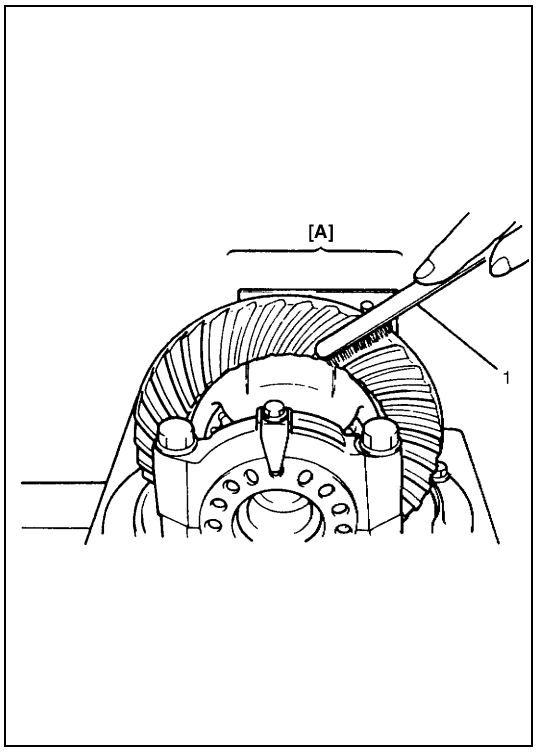

10) As final step, check gear tooth contact as follows.

CAUTION:

When applying red lead paste to teeth, be sure to paint tooth surfaces uniformly.
The paste must not be too dry or too fluid.

a) After cleaning tooth surface of about 10 teeth in [A] range, paint them with gear marking compound evenly by using brush (1) or sponge etc.

NOTE:

Be careful not to turn drive bevel gear more than one full revolution, for it will hinder accurate check.

b) Turn gear to bring its painted part in mesh with drive bevel pinion and turn it back and forth by hand to repeat their contact.

c) Bring painted part up and check contact pattern, referring to following chart. If contact pattern is not normal, readjust or replace as necessary according to instruction in chart.

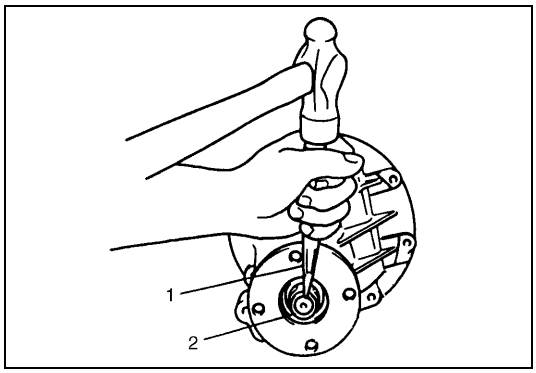

11) Upon completion of gear tooth contact check, caulk flange nut (2) with caulking tool (1) and hammer.

TOOTH CONTACT PATTERN	DIAGNOSIS AND REMEDY
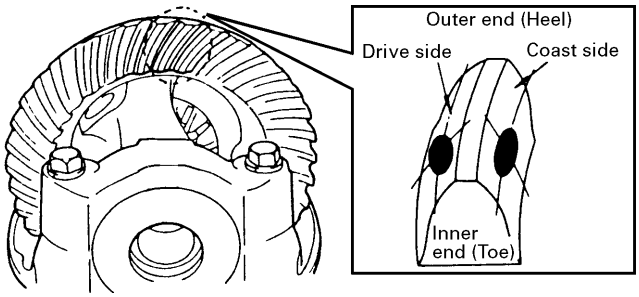	NORMAL
	HIGH CONTACT Pinion is positioned too fat from the center of drive bevel gear. 1) Increase thickness of pinion height adjusting shim and position pinion closer to gear center. 2) Adjust drive bevel gear backlash to specification. 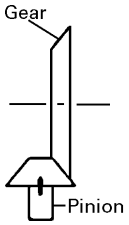
	LOW CONTACT Pinion is positioned too close to the center of drive bevel gear. 1) Decrease thickness of pinion height adjusting shim and position pinion farther from gear center. 2) Adjust drive bevel gear backlash to specification. 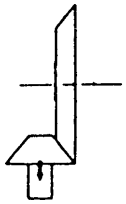
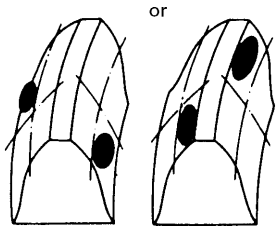	These contact patterns indicate that the “offset” of differential carrier is too much or too little. The remedy is to replace the carrier with a new one.
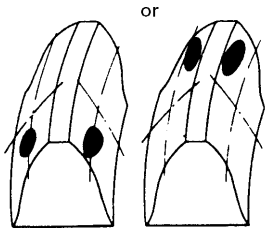	These contact patterns, located on toe or heel on both drive and coast sides, mean that 1) both pinion and gear are defective, 2) carrier is not true and square, or 3) gear is not properly seated on differential case. The remedy is to replace the defective member.

TOOTH CONTACT PATTERN	DIAGNOSIS AND REMEDY
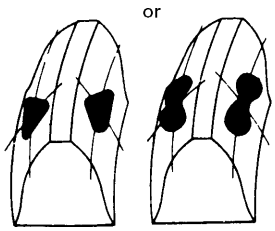	Irregular patterns: If the pattern is not oval, it means that bevel gear is defective. High or low spots on tooth surfaces or on the seat of bevel gear are the cause of irregular patterns appearing on some teeth. The remedy is to replace the pinion and gear set and, if the seat is defective, so is differential case.

Tightening Torque Specifications

Fastening part	Tightening torque		
	N•m	kg-m	lb-ft
Front differential oil drain plug	27	2.7	19.5
Front differential oil level/filler plug	50	5.0	36.5
Differential carrier bolts	23	2.3	17.0
Propeller shaft bolts	50	5.0	36.5
Drive bevel gear bolts	85	8.5	61.5
Flange nut	100 – 400	10 – 40	72 – 289
Bearing cap bolts	50	5.0	36.5
Lock plate bolts	11.5	1.15	8.5

Required Service Materials

Material	Recommended SUZUKI product (Part Number)	Use
Thread lock cement	THREAD LOCK CEMENT 1322 (99000-32110)	Drive bevel gear bolts
Lithium grease	SUZUKI SUPER GREASE A (99000-25010)	Oil seal lip
Sealant	SUZUKI BOND NO. 1215 (99000-31110)	• Front differential drain plug • Mating surface of differential carrier • Mating surface of front axle housing • Differential carrier bolts

Special Tools

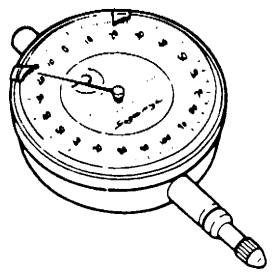 09900-20607 Dial gauge	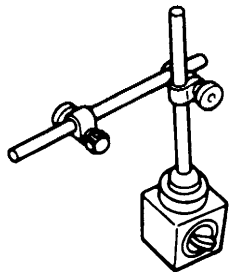 09900-20701 Magnetic stand	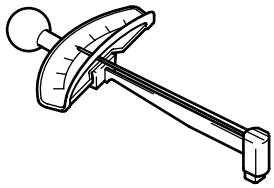 09900-23107 Torque wrench	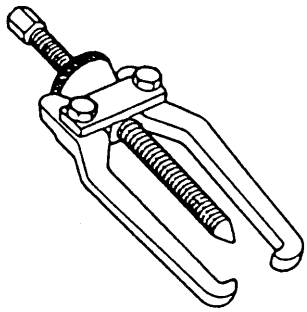 09913-65135 Bearing puller
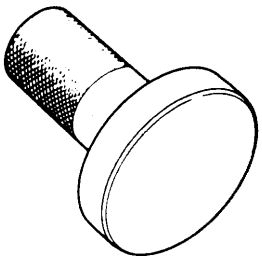 09913-75510 Bearing installer	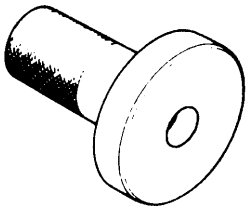 09913-75520 Bearing installer	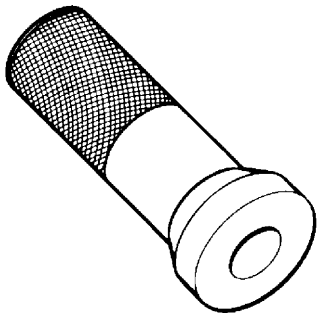 09913-76010 Bearing installer	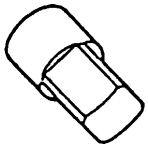 09915-24550 Adapter socket
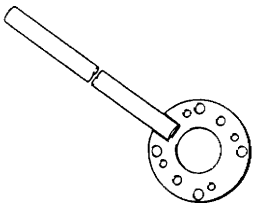 09922-66020 Flange holder	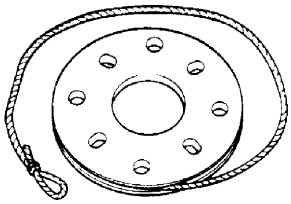 09922-75222 Preload adjuster	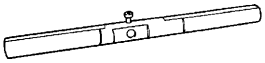 09922-76120 Dummy shaft	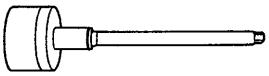 09922-76140 Bevel pinion shaft
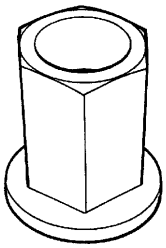 09922-76150 Bevel pinion nut	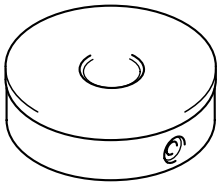 09922-76220 Bearing gear dummy	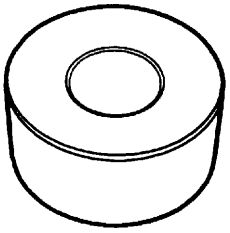 09922-76310 Rear collar	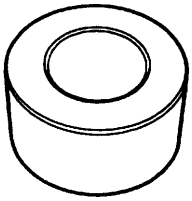 09922-76320 Rear collar

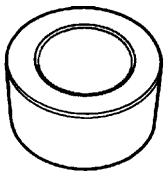 09922-76340 Rear collar	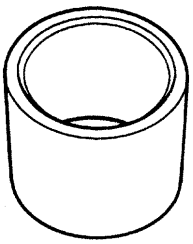 09922-76410 Front collar	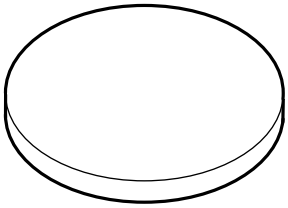 09922-76520 Gauge block	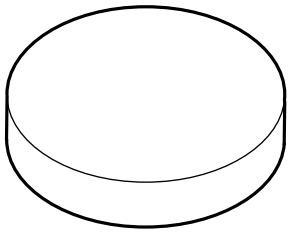 09922-76550 Gauge block
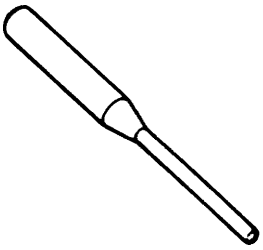 09922-85811 Spring pin remover	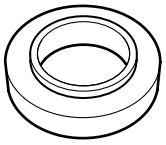 09924-07730 Bearing installer	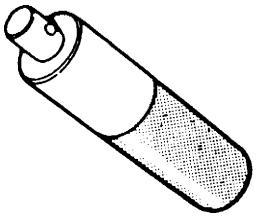 09924-74510 Installer attachment	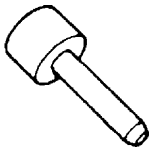 09925-58210 Oil seal installer
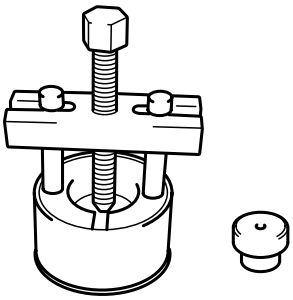 09926-37610 Bearing remover See NOTE 1.	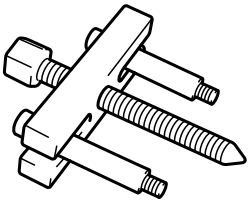 09926-37610-001 Bearing puller See NOTE 2.	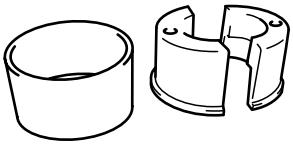 09926-37610-002 Bearing puller attachment See NOTE 2.	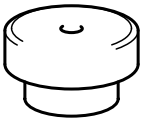 09926-37610-003 Bearing remover attach-ment See NOTE 2.
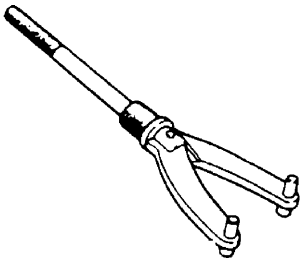 09930-40113 Rotor holder	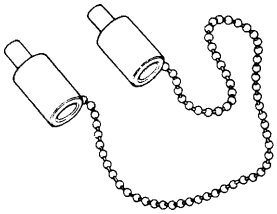 09930-40120 Attachment	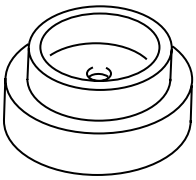 09944-66010 Oil seal installer	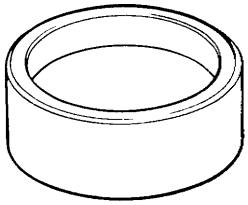 09944-66020 Bearing installer

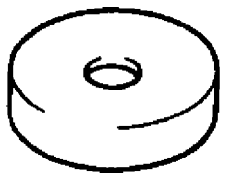

09951-46010
Oil seal installer

NOTE:

- **“1” : This tool consists of Bearing Puller with 09926-37610-001, Bearing Puller Attachment with 09926-37610-002 and Bearing Remover Attachment with 09926-37610-003.**
- **“2” : This tool is constituent of Bearing Remover with 09926-37610.**

SECTION 7F

REAR DIFFERENTIAL

CONTENTS

General Description **7F-2**
Diagnosis **7F-3**
On-vehicle Service **7F-4**
Oil Change 7F-4
Unit Repair Overhaul **7F-5**
Differential Unit 7F-6
Tightening Torque Specification **7F-25**
Required Service Material **7F-25**
Special Tool **7F-25**

General Description

The rear differential assembly uses a hypoid bevel pinion and gear.
The differential assembly is decisive in that the drive power is concentrated there. Therefore, use of genuine parts and specified torque is compulsory. Further, because of sliding tooth meshing with high pressure between bevel pinion and gear, it is mandatory to lubricate them by hypoid gear oil.
The hypoid gears have an advantage of preventing gear noise, at the same time, they require accurate adjustment of tooth contract and backlash.

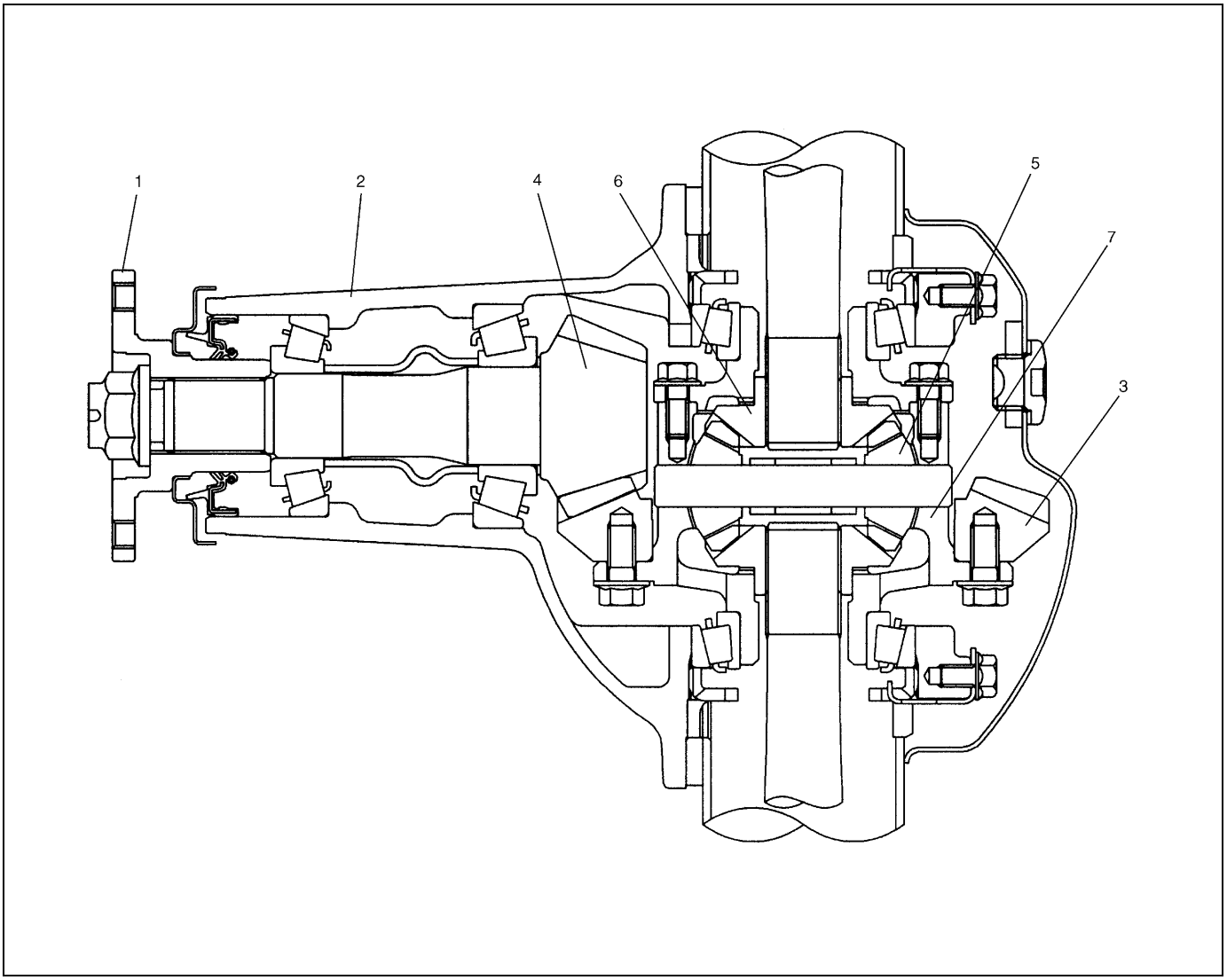

1. Companion flange	5. Differential pinion
2. Differential carrier	6. Differential side gear
3. Drive bevel gear/hypoid gear	7. Differential case
4. Drive bevel pinion/hypoid gear	

Diagnosis

Condition	Possible Cause	Correction
Gear noise	Deteriorated or water mixed lubricant	Repair and replenish.
	Inadequate or insufficient lubricant	Repair and replenish.
	Maladjusted backlash between bevel pinion and gear	Adjust and prescribed.
	Improper tooth contact in the mesh between bevel pinion and gear	Adjust or replace.
	Loose bevel gear securing bolts	Replace or retighten.
	Damaged side gear(s) or side pinion(s)	Replace.
Bearing noise	Constant noise: Deteriorated or water mixed lubricant	Repair or replenish.
	Constant noise: Inadequate or insufficient lubricant	Repair or replenish.
	Noise while coasting: Damaged bearing(s) of bevel pinion	Replace.
	Noise while turning: Damaged differential side bearing(s) or axle bearing(s)	Replace.
Oil leakage	Clogged breather plug	Clean.
	Worn or damaged oil seal	Replace.
	Excessive oil	Adjust oil level.
	Loose differential carrier bolts	Replace or retighten.

On-vehicle Service

Oil Change

1) Before oil change or inspection, be sure to stop engine and set vehicle horizontally.
2) Check oil level and existence of leakage. For checking oil level roughly, lower point of level hole can be assumed to be standard point of level. If leakage is found, correct its cause.

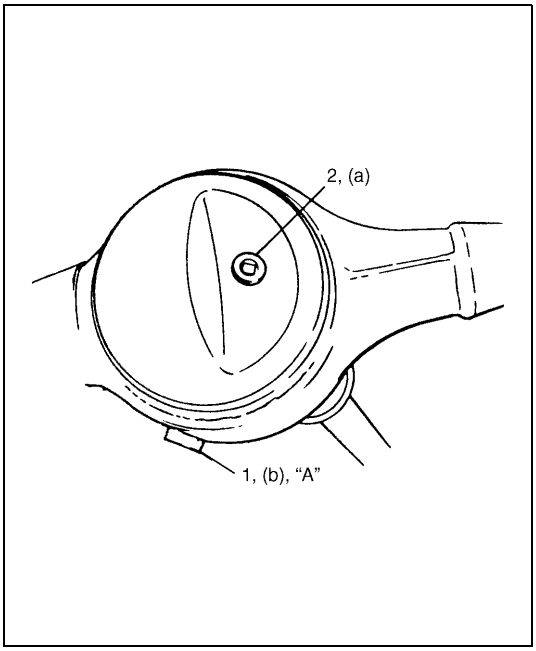

3) Remove level/filler plug (2) and drain plug (1), then drain differential oil.
4) Apply sealant to drain plug thread.

"A" : Sealant 99000-31110

5) Tighten drain plug to specified torque.

Tightening torque
Rear differential oil drain plug
(b) : 27 N·m (2.7 kg-m, 19.5 lb-ft)

6) Pour proper amount of new differential oil as specified below roughly up to level hole.
7) Install new gasket to level/filler plug and tighten level/filler plug to specified torque.

Tightening torque
Rear differential oil level/filler plug
(a) : 50 N·m (5.0 kg-m, 36.5 lb-ft)

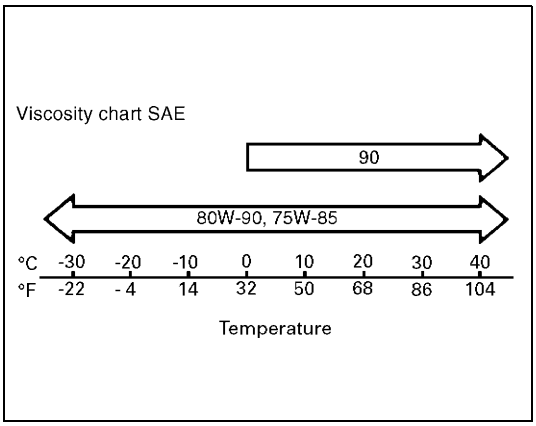

NOTE:

- **It is highly recommended to use SAE 80W-90 viscosity.**
- **Whenever vehicle is hoisted for any other service work than oil change, also be sure to check for oil leakage.**

Differential oil
: Hypoid gear oil API GL-5
For oil viscosity, refer to the chart.

Differential oil capacity
: 1.5 liters (3.2/2.6 US/Imp. pt)

Unit Repair Overhaul

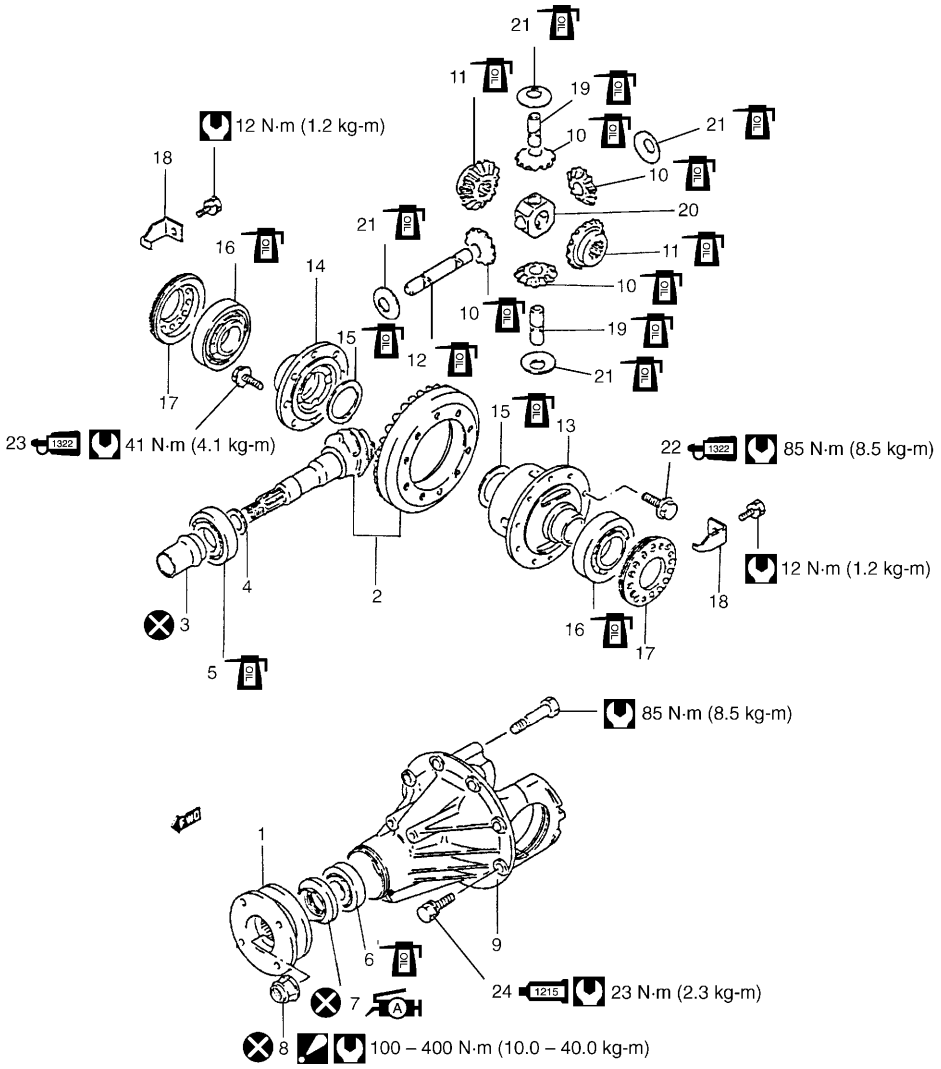

	1. Companion flange		10. Differential pinion		19. Pinion shaft No.2
	2. Drive bevel/Hypoid gear set		11. Differential gear		20. Pinion joint
	3. Drive bevel pinion spacer		12. Pinion shaft No.1		21. Pinion washer
	4. Shim		13. Differential left case	1322	22. Drive bevel gear bolt : Apply thread lock cement 99000-32110 to thread.
	5. Drive bevel pinion rear bearing		14. Differential right case	1322	23. Differential case bolt : Apply thread lock cement 99000-32110 to thread.
	6. Drive bevel pinion front bearing		15. Thrust washer	1215	24. Differential carrier bolt : Apply sealant 99000-31110 to thread.
A H	7. Oil seal : Apply grease 99500-25010 to oil seal lip.		16. Differential side bearing		Do not reuse.
	8. Flange nut : After tightening nut so as rotational torque of drive bevel pinion to be in specified torque, caulk nut securely.		17. Differential side bearing adjuster		Tightening torque
1215	9. Differential carrier assembly : Apply sealant 99000-31110 to mating face with axle housing.		18. Lock plate	OIL	Apply differential oil.

Differential Unit

DISMOUNTING

1) Lift up vehicle and remove wheels.

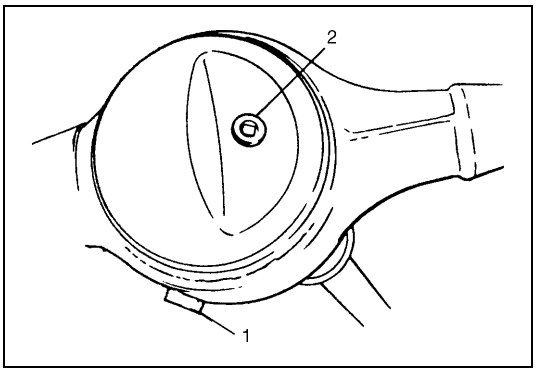

2) Drain differential oil from rear axle housing referring to “Oil Change” in this section.

1.	Drain plug
2.	Level/Filler plug

3) Remove rear brake drums and pull out right and left rear axle shaft referring to “Rear Axle Shaft and Wheel Bearing” in Section 3E.

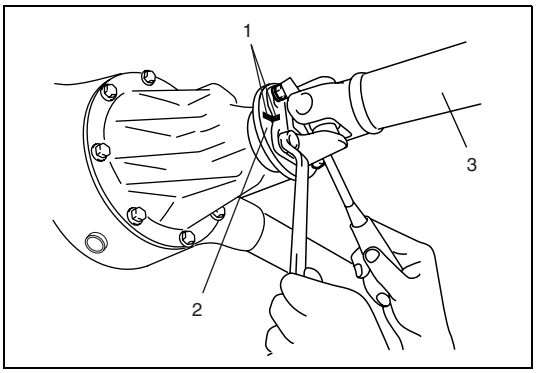

4) Before removing propeller shaft, give match marks (1) on companion flange (2) and propeller shaft (3) as shown.

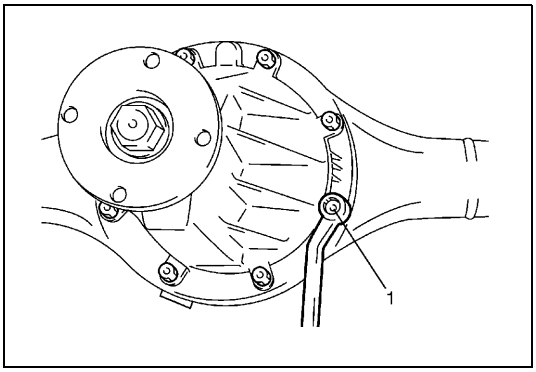

5) Remove differential carrier bolts (1) and differential assembly.

REMOUNTING

Reverse removal procedure for installation, noting the following.

Rear Differential

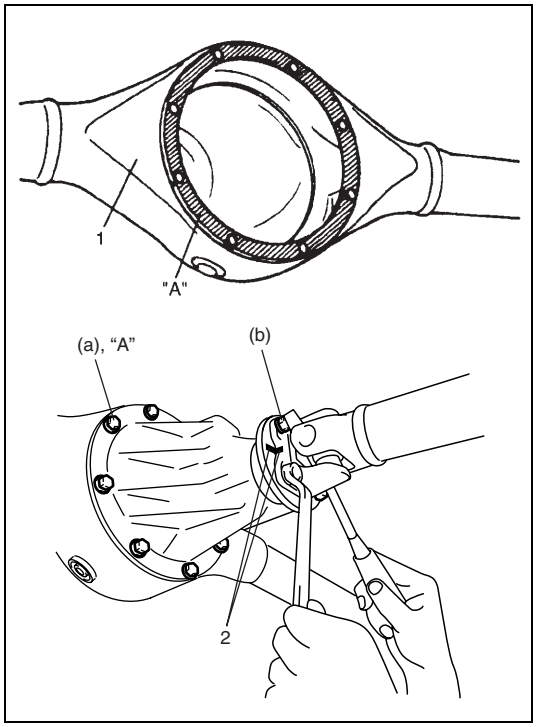

- Clean mating surface of rear axle housing (1) and differential carrier and apply sealant to housing side.

"A" : Sealant 99000-31110

- Apply sealant to carrier bolts and tighten carrier bolts to specified torque.

"A" : Sealant 99000-31110

Tightening torque
Differential carrier bolts
(a) : 23 N·m (2.3 kg-m, 17.0 lb-ft)

- Install propeller shaft to companion flange aligning match marks (2) and tighten propeller shaft bolts to specified torque.

Tightening torque
Propeller shaft bolts
(b) : 50 N·m (5.0 kg-m, 36.5 lb-ft)

Rear Axle Shaft

For installation of rear axle shafts, refer to "Rear Axle Shaft and Wheel Bearing" in Section 3E.

Rear Brake Drum

For installation of rear brake drums, refer to "Rear Axle Shaft and Wheel Bearing" in Section 3E.

Differential Gear Oil

Refill differential housing with new specified differential oil. Refer to "Oil Change" in this section.

Brake Circuit Air Purging

Make sure to purge air out of brake circuit. Refer to "Bleeding Brakes" in Section 5.
Then ensure that joint seam of pipe is free from oil leak.

DISASSEMBLY

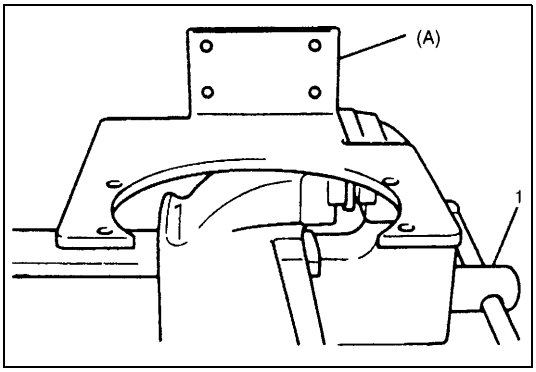

1) Set special tool on vise (1) securely.

Special tool
(A) : 09944-76010

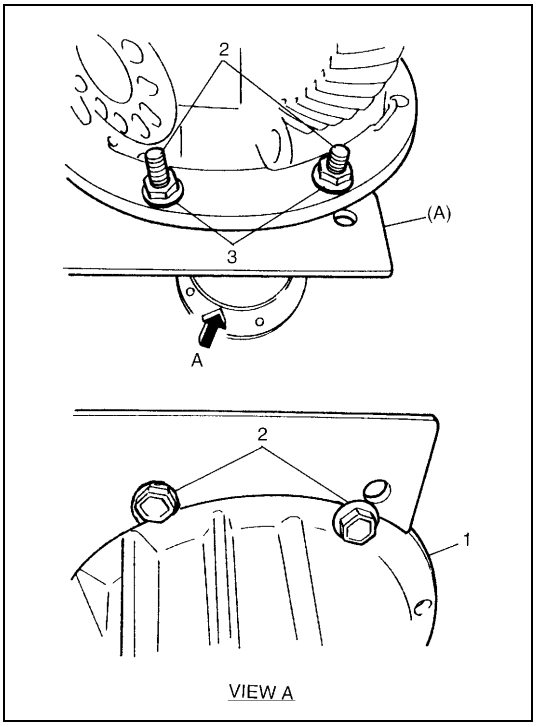

2) Using 2 bolts and nuts, set differential assembly onto special tool.

Special tool
(A) : 09944-76010

1. Differential carrier

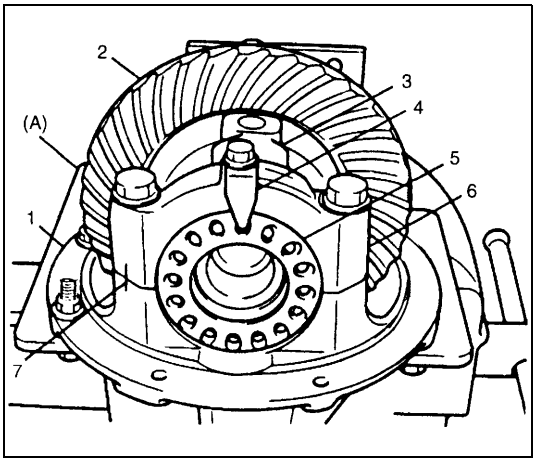

3) Put match marks (7) on differential side bearing caps and differential carrier (1).
4) Remove differential side bearing lock plates (4) and differential side bearing caps (6) by removing their bolts and then remove bearing adjusters (5), side bearing outer races and drive bevel gear (2) with differential case (3).

Special tool
(A) : 09944-76010

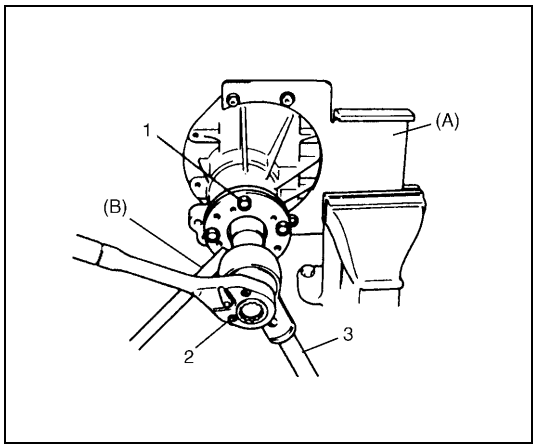

5) Turn differential assembly together with special tool (A) by 90 degrees and grip it with vise again.

Special tool
(A) : 09944-76010

6) Hold companion flange with special tool and then remove flange nut by using power wrench (3) and socket wrench (2).

Special tool
(B) : 09922-66020

1. Bolt and nut

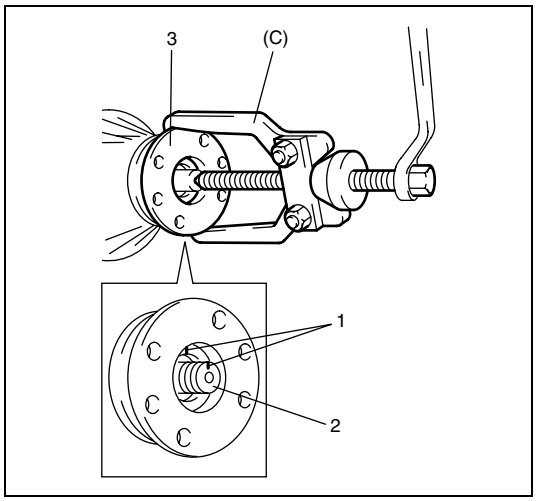

CAUTION:
Do not make mating mark on the coupling surface of the flange to prevent propeller shaft from generating vibration.

7) Make mating marks (1) on drive bevel pinion (2) and companion flange (3).
8) Remove companion flange from drive bevel pinion using special tool.

Special tool
(C) : 09913-65135

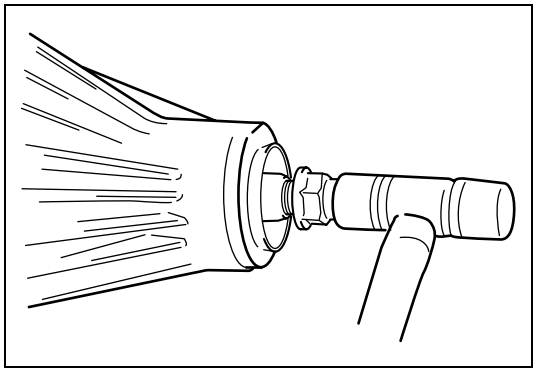

9) Remove drive bevel pinion with rear bearing, and spacer from differential carrier.
If it is hard to remove, screw an used nut into pinion and hammer on that nut with a plastic hammer but never directly on drive bevel pinion.

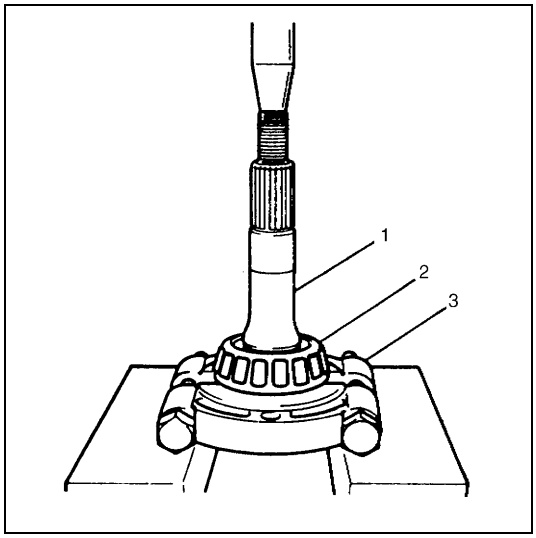

10) Remove drive bevel pinion rear bearing (2) by using bearing puller (3) and hydraulic press.

1. Drive bevel pinon

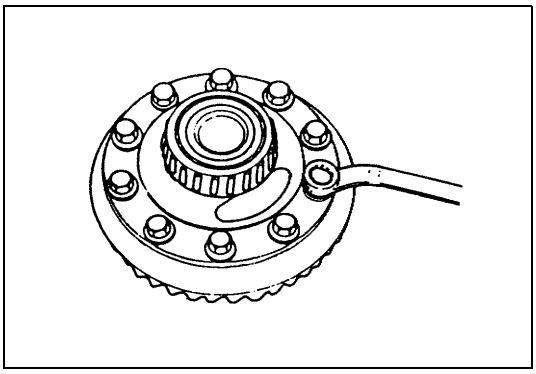

11) Remove 10 bolts securing bevel gear to differential case, and separate gear from case.

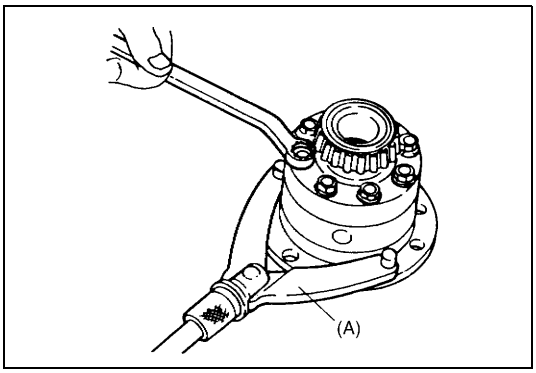

12) There are 8 bolts fastening two differential case halves together. Remove these bolts to sever right-hand case half from left-hand one, and take off right-hand one.

Special tool
(A) : 09930-40113

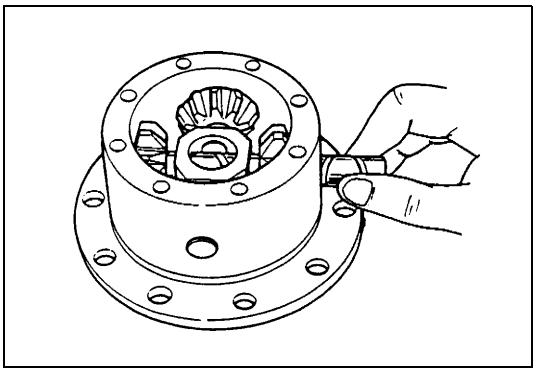

13) Remove differential pinion shafts side gears, differential pinions and thrust washers.

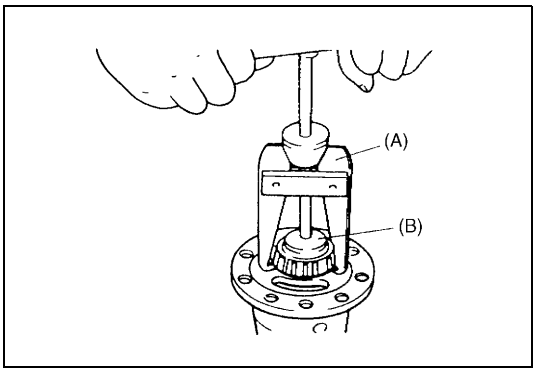

14) Using special tools, extract side bearing from each differential case half.

Special tool
(A) : 09913-60910
(B) : 09913-85230

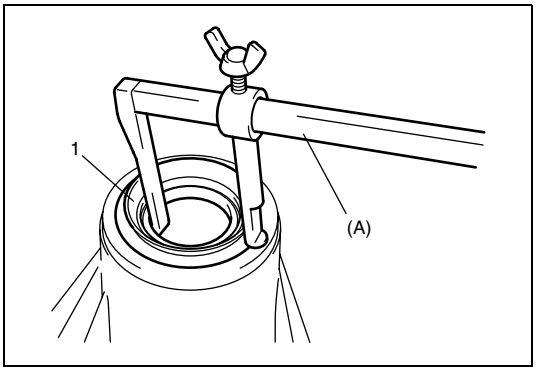

15) Remove oil seal (1) from differential carrier by using special tool.

Special tool
(A) : 09913-50121

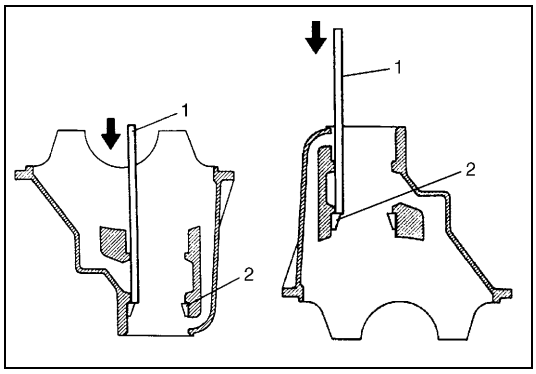

16) Drive out drive bevel pinion bearing outer races in differential carrier by hammering metal stick applied to them.

INSPECTION

- Check companion flange for wear or damage.
- Check bearings for wear or discoloration.
- Check differential carrier for cracks.
- Check drive bevel pinion and bevel gear for wear or cracks.
- Check differential gears, pinion gears and pinion shaft for wear or damage.
- Check side gear spline for wear or damage.

ADJUSTMENT AND REASSEMBLY

Judging from faulty conditions noted before disassembly and what is found through visual check of bearing and gear tooth etc. after disassembly, prepare replacing parts and proceed to reassembly according to procedures as described below.

CAUTION:

- **Drive bevel gear and pinion must be replaced as a set when either replacement becomes necessary.**
- **When replacing taper roller bearing, replace as inner race and outer race assembly.**

Drive Bevel Pinion Bearing Outer Race

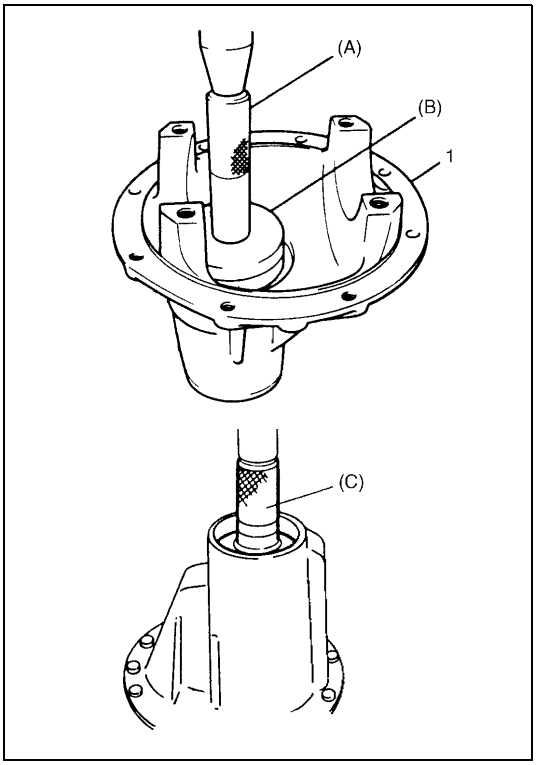

CAUTION:
Perform press-fitting carefully so as not to tilt outer race.

Install bevel pinion bearing outer races using special tools and hydraulic press.

Special tool
(A) : 09924-74510
(B) : 09926-68310
(C) : 09913-75510

1. Differential carrier

Differential Case Assembly

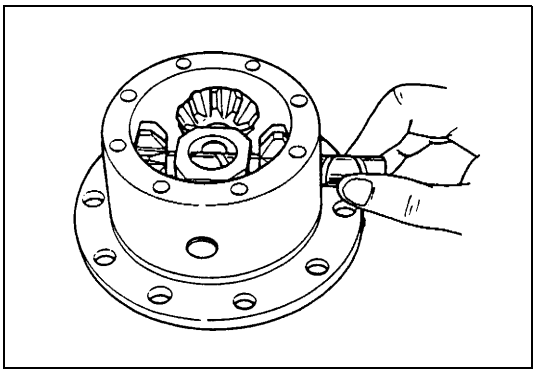

1) Install differential side gears, pinions, thrust washers and pinion shafts in differential case.

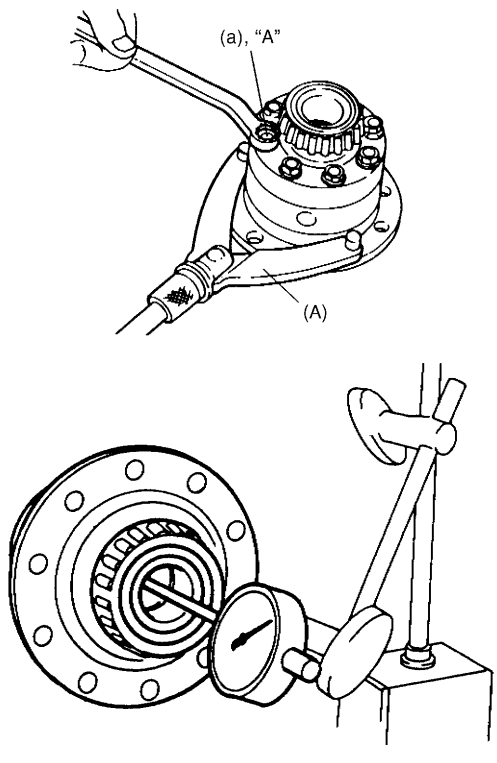

2) To check thrust play of differential side gear fasten together two case halves by tightening securing bolts to prescribed torque. By comparing thrust play reading, taken as shown in figure, against thrust play indicated below, increase or decrease total thickness of thrust washers, which are located in two places, that is, on the inner side of each case half.

Special tool
(A) : 09930-40113

Tightening torque
Differential case bolts
(a) : 41 N·m (4.1 kg-m, 30.0 lb-ft)

Differential side gear thrust play
Standard : 0.12 – 0.37 mm (0.005 – 0.014 in.)

Available differential gear thrust washer thickness
: 0.6, 0.7 and 0.8 mm (0.024, 0.028 and 0.032 in.)

3) Remove differential case bolts again.
4) Apply thread lock cement to differential case bolts.

"A" : Cement 99000-32110

5) Retighten differential case bolts to specified torque.

Tightening torque
Differential case bolts
(a) : 41 N·m (4.1 kg-m, 30.0 lb-ft)

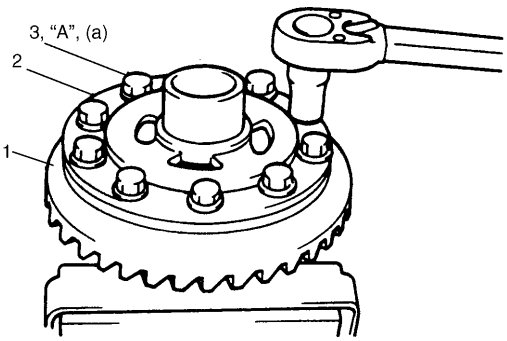

CAUTION:
Use specified bolts. Use of any other bolts than specified may cause loosening of bolts and damage to drive bevel gear.

6) Put drive bevel gear (1) on differential case (2) and fasten them with 10 bolts (3) by tightening them to specified torque. Use thread lock cement for 10 bolts.

"A" : Cement 99000-32110

Tightening torque
Drive bevel gear bolts
(a) : 85 N·m (8.5 kg-m, 61.5 lb-ft)

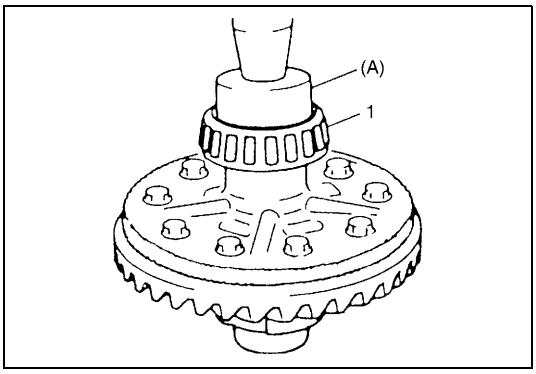

7) Press-fit differential side bearing (1) with special tool and hydraulic press.

Special tool
(A) : 09944-66020

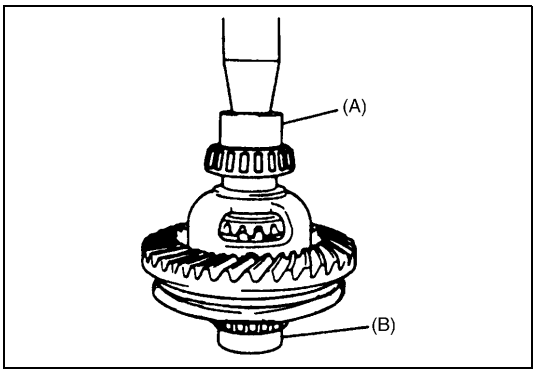

8) Hold bearing press-fitted in previous step with holder and press-fit differential side bearing on the other side.

NOTE:

Be sure to use bearing holder for the purpose of protecting lower bearing.

Special tool
(A) : 09944-66020
(B) : 09951-16060

Differential Carrier and Drive Bevel Pinion

To engage drive bevel pinion and gear correctly, it is prerequired to install drive bevel pinion to differential carrier properly by using adjusting shim.

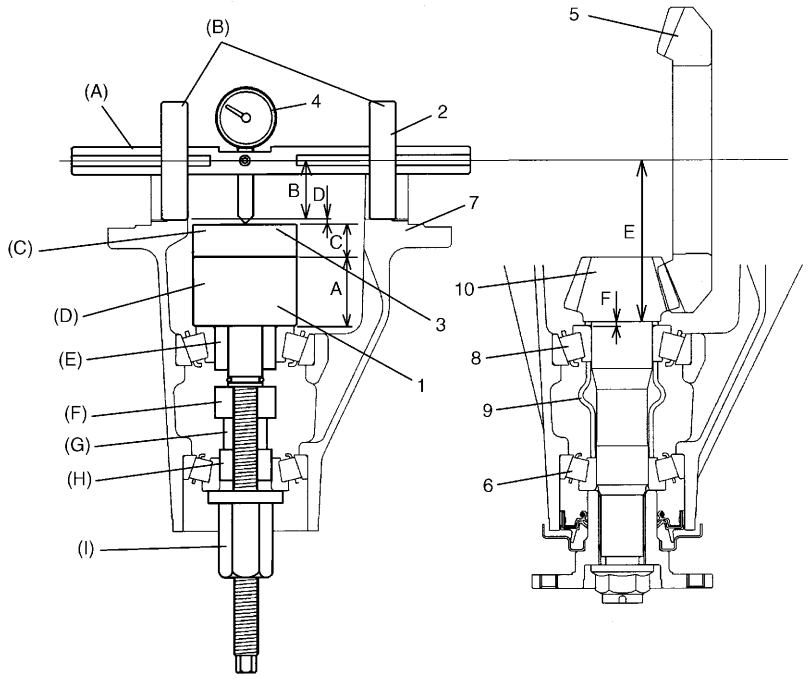

A : Dummy height of pinion form dummy (= 40 mm/1.575 in.)	F : Shim thickness for mounting distance adjustment (= D)	6. Front bearing
B : Radius of bearing form dummy with dummy shaft (= 40 mm/1.575 in.)	1. Pinion form dummy	7. Differential carrier
C : Block dummy thickness (= 14 mm/0.5512 in.)	2. Bearing form dummy with dummy shaft	8. Rear bearing
A+B+C : Mounting distance adjusting dummy total size (= 94 mm/3.701 in.)	3. Block dummy	9. Spacer
D : Measured dimension	4. Dial gauge	10. Drive bevel pinion
E : Drive bevel pinion mounting distance (= 94 mm/1.575 in.)	5. Drive bevel gear	

Special tool

(A) : 09922-76120
(B) : 09922-76240
(C) : 09922-76550
(D) : 09922-76140
(E) : 09922-76410
(F) : 09922-76310
(G) : 09922-76340
(H) : 09922-76320
(I) : 09922-76150

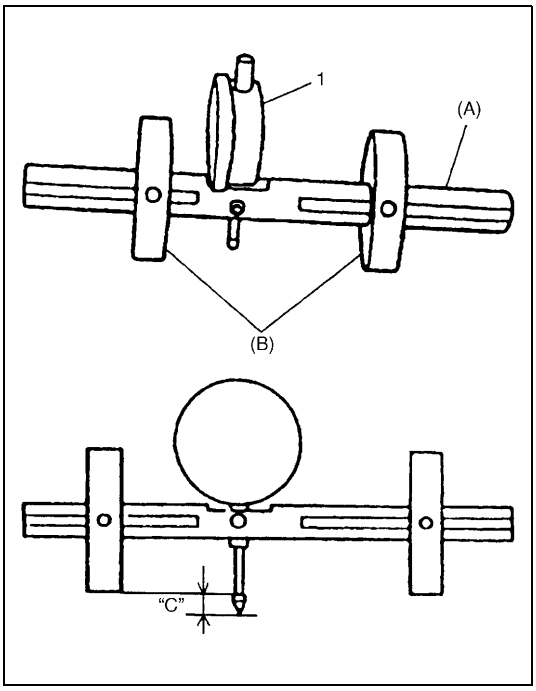

1) Assemble bearing form dummy with dummy shaft using special tools.

Special tool
(A) : 09922-76120
(B) : 09922-76240

2) Install dial gauge (1) to bearing form dummy with dummy shaft as shown in figure.

Dial gauge rod tip set distance
"C" : 2 – 3 mm (0.079 – 0.118 in.)

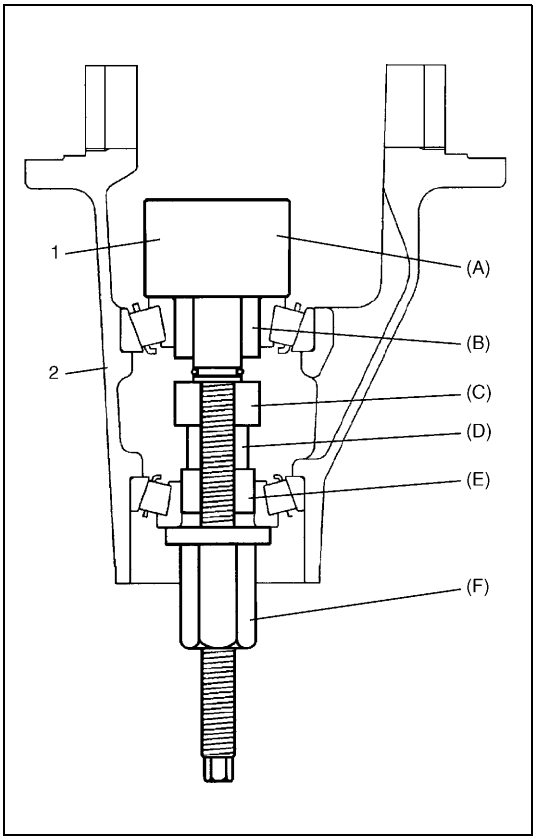

NOTE:
This installation requires no spacer or oil seal.

3) Apply differential oil to drive bevel pinion front and rear bearings.
4) Install pinion form dummy (1), the other special tools and drive bevel pinion bearings to differential carrier (2).

Special tool
(A) : 09922-76140
(B) : 09922-76410
(C) : 09922-76310
(D) : 09922-76340
(E) : 09922-76320
(F) : 09922-76150

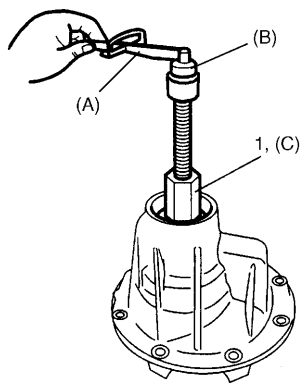

NOTE:

Before taking measurement, check for rotation by hand more than 15 revolutions.

5) Tighten special tool (1) so that specified bearing preload is obtained.

Special tool
(A) : 09900-23107
(B) : 09915-24550
(C) : 09922-76150

Drive bevel pinion bearing preload at 50 rpm
: 0.9 – 1.7 N·m (9.0 – 17.0 kg-cm, 7.8 – 14.7 lb-in.)

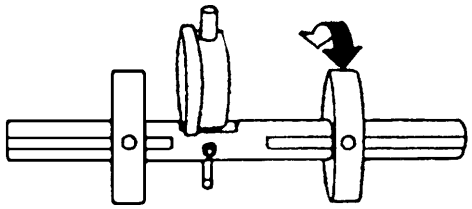

NOTE:

- **When setting dial gauge to bearing form dummy with dummy shaft, tighten screw lightly. Be careful not to overtighten it, which will cause damage to dial gauge.**
- **With dial gauge set, turn dummy back and forth by hand a couple of times and attain accurate zero adjustment.**
- **It is desirable that short pointer indicates beyond 2 mm when long one is at zero.**

6) Set dial gauge to bearing form dummy with dummy shaft and make zero adjustment on surface plate.

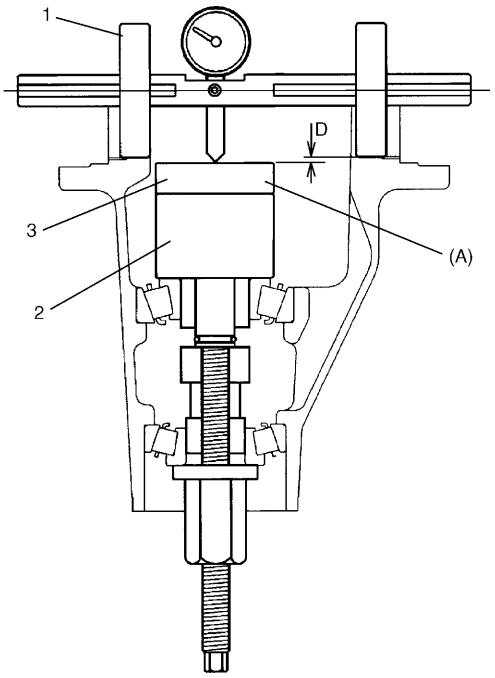

7) Put block dummy (3) on pinion form dummy (2).

Special tool
(A) : 09922-76550

NOTE:

- **Repeat turning back and forth of dummy and measure distance as far as top surface of block dummy accurately.**
- **When dial gauge measuring tip extends from zero position, pointer turns counterclockwise.**
- **Measured value may exceed 1 mm. Therefore, it is also necessary to know reading of short pointer.**

8) Place zero-adjusted bearing form dummy with dummy shaft (1) and dial gauge set on block dummy (3) and take measurement between zero position and extended dial gauge measuring tip.
9) Obtain adjusting shim thickness by using measured value by dial gauge in the following equation.

Necessary shim thickness	=	Dial gauge measured value D

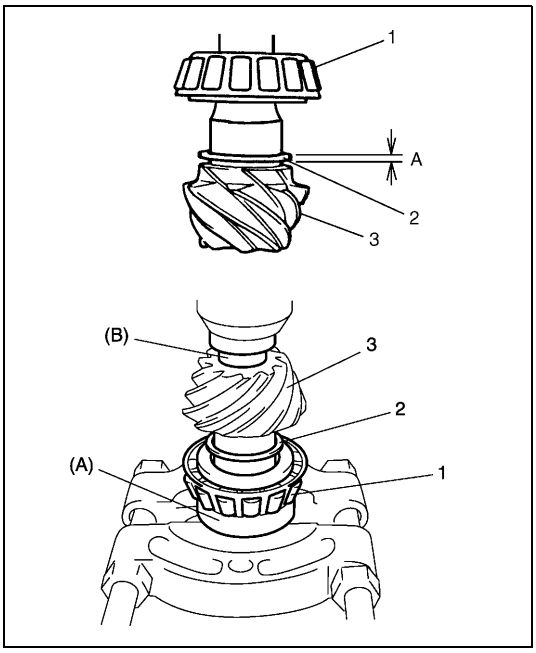

10) Select adjusting shim(s) (2) closest to measured value from among following available sizes.
11) Put shim(s) in place and press-fit drive bevel pinion rear bearing (1) to drive bevel pinion (3) by using special tools and hydraulic press.

Special tool
(A) : 09924-07730
(B) : 09926-37610-003

Available shim thickness
: 0.30, 1.00, 1.03, 1.06, 1.09, 1.12, 1.15, 1.18, 1.21, 1.24, 1.27, and 1.30 mm (0.012, 0.039, 0.041, 0.042, 0.043, 0.044, 0.045, 0.046, 0.048, 0.049, 0.050 and 0.051 in.)

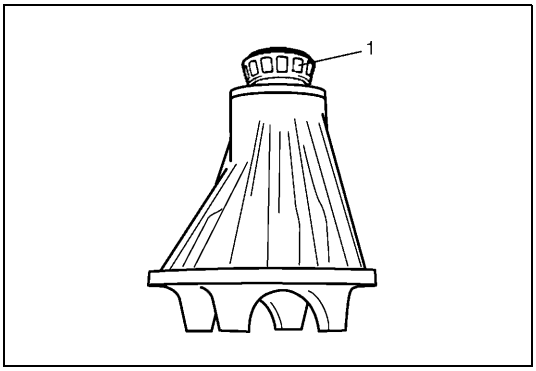

12) Apply differential oil to drive bevel pinion front bearing (1).
13) Install drive bevel pinion front bearing in differential carrier.

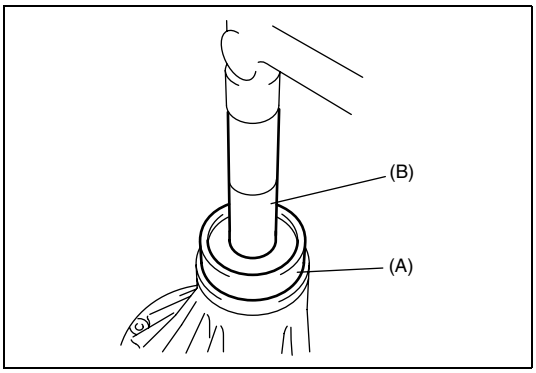

14) Apply grease to oil seal lip.

Grease 99000-25010

15) Install oil seal in differential carrier by using special tool.

Special tool
(A) : 09944-66010
(B) : 09924-74510

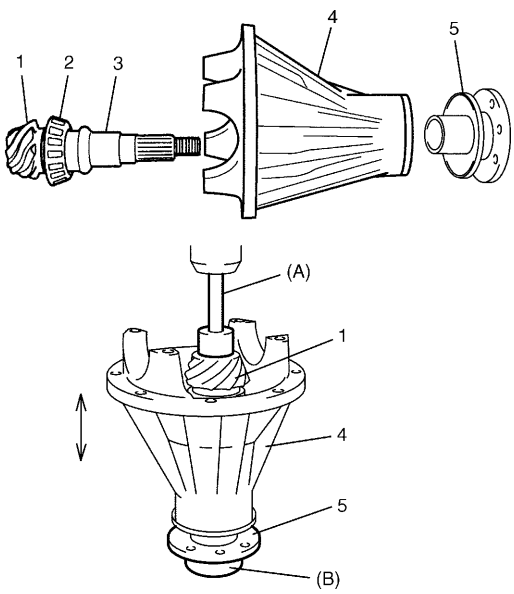

CAUTION:

- **Use new drive bevel pinion spacer, otherwise bearings may be damaged.**
- **Take care not to give press force to drive bevel pinion spacer, otherwise spacer and bearings may be damaged.**

16) Apply differential oil to drive bevel pinion rear bearing (2).
17) Install drive bevel pinion (1), spacer (3) and companion flange (5) into differential carrier (4).
18) Until bearing axial clearance come to 1 – 2 mm (0.039 – 0.079 in.), press-fit drive bevel pinion (1) to companion flange (5) by using special tools and hydraulic press.

NOTE:

Bearing axial clearance can be confirmed by shaking differential carrier (4) in the direction shown in figure.

Special tool
(A) : 09925-58210
(B) : 09951-46010

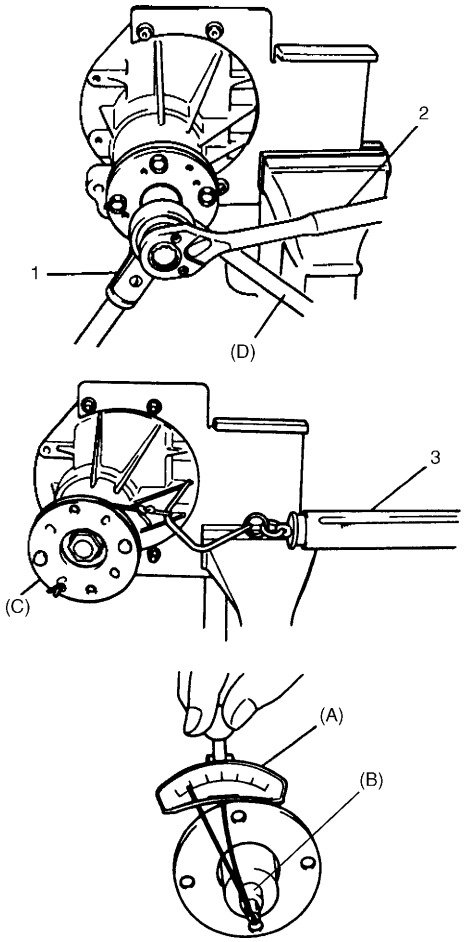

NOTE:

- **Before taking measurement, check for smooth rotation by hand.**
- **Preload of drive bevel pinion bearings is adjusted by tightening flange nut to deform drive bevel pinion spacer.**
  Therefore, be sure to use a new spacer for adjustment and tighten flange nut step by step and check for preload by measuring starting torque as often as tightening to prevent over crushing of spacer.
  If preload exceeds specification given below during adjustment, replace spacer and repeat preload adjustment procedure. Attempt to decrease preload by loosening flange nut will not do.
- **For measuring preload of drive bevel pinion bearings, turn drive bevel pinion at about 50 rpm is required.**
- **Make a record preload of drive bevel pinion bearings because the preload is used for checking composite preload of drive bevel pinion bearings and differential side bearings.**

19) Tighten flange nut gradually with special tools so that preload of drive bevel pinion is in specification.

Tightening torque
Flange nut
: 100 – 400 N·m (10 – 40 kg-m, 72 – 289 lb-ft)

Preload of drive bevel pinion bearings/Starting torque of drive bevel pinion when measuring by torque wrench
: 0.9 – 1.7 N·m (9.0 – 17.0 kg-cm, 7.8 – 14.7 lb-in.)

Preload of drive bevel pinion bearings/Starting torque of drive bevel pinion when measuring by spring balance
: 18 – 34 N (1.8 – 3.4 kg, 4.0 – 7.5 lb)

Special tool
(A) : 09900-23107
(B) : 09915-24550
(C) : 09922-75222
(D) : 09922-66020

1.	Power wrench (4 – 10 magnification)
2.	Socket wrench
3.	Spring balance

Differential Assembly

1) Place differential side bearing outer races on their respective bearings.
   Used left and right outer races are not interchangeable.
2) Install differential case assembly in differential carrier.
3) Install differential side bearing adjusters on their respective carrier, making sure adjuster are threaded properly.

NOTE:

Screw in each adjuster till it contacts bearing outer race so that outer race is prevented from including.

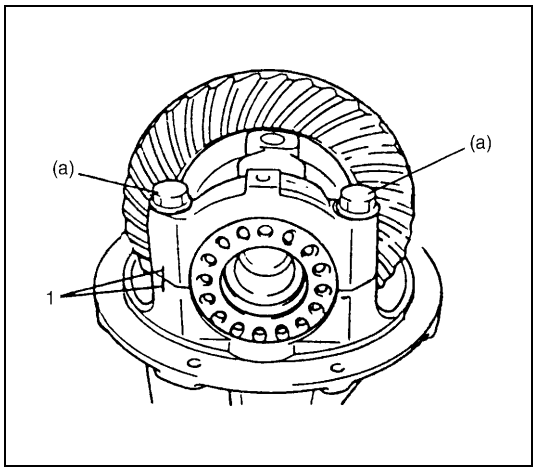

4) Align match marks (1) on differential side bearing cap and carrier. Screw in two side bearing cap bolts two or three turns and press down bearing cap by hand.

NOTE:

If bearing cap does not fit tightly on carrier, side bearing adjuster is not threaded properly. Reinstall adjuster.

5) Tighten bearing cap bolts to provisional torque.

Tightening torque
Bearing cap bolts
(a) : 15 N·m (1.5 kg-m, 11.0 lb-ft)

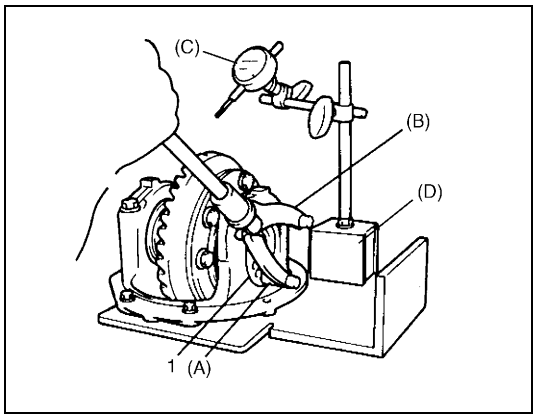

6) Tighten both differential side bearing adjusters (1) so as to obtain specified gear backlash and at the same time, obtain preload of differential side bearing.

Special tool
(A) : 09930-40120
(B) : 09930-40113
(C) : 09900-20607
(D) : 09900-20701

Bevel gear backlash
: 0.10 – 0.20 mm (0.0039 – 0.0078 in.)

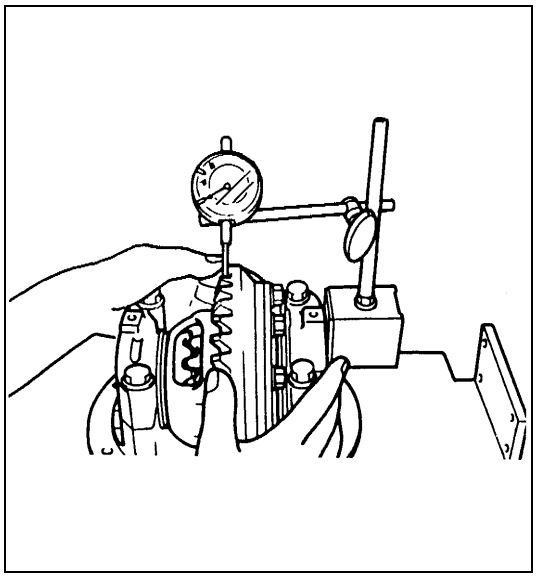

NOTE:

- **Be sure to apply measuring tip of dial gauge at right angles to convex side of tooth.**
- **Measure at least 4 points on drive bevel gear periphery.**
- **As a practical measure following would be recommended to obtain specified backlash and differential side bearing preload at the same time.**
  - **To increase or decrease backlash for adjustment, displace drive bevel gear toward or away from drive bevel pinion by running in one adjuster and running out the other adjuster by equal amount.**
  - **Tighten both adjusters further by one notch at a time.**

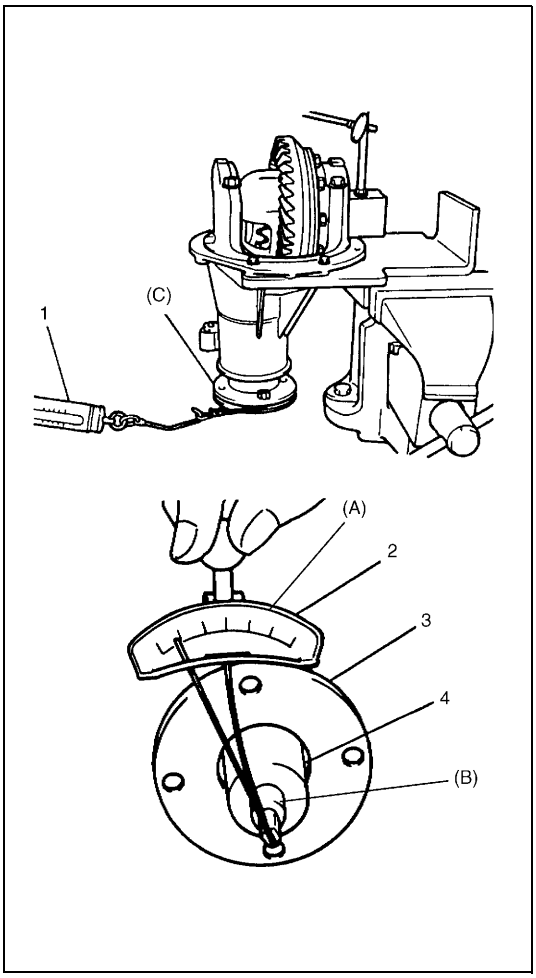

7) Measure composite preload of drive bevel pinion bearings and differential side bearings with torque wrench (2) or spring balance (1).
8) Calculate preload of differential side bearings by using the following equation.

Preload of differential side bearings	=	Composite preload	–	Preload of drive bevel pinion bearings

If preload of differential side bearings is specification shown below, adjust preload by tightening or loosening side bearing adjusters.

Preload of differential side bearings/Starting torque of drive pinion when measuring by torque wrench
: 0.2 – 0.3 N·m (2.0 – 3.0 kg-cm, 1.7 – 2.6 lb-in.)

Preload of differential side bearings/Starting torque of drive pinion when measuring by spring balance
: 4.0 – 6.0 N (0.4 – 0.6 kg, 0.9 – 1.3 lb)

Special tool
(A) : 09900-23107
(B) : 09915-24550
(C) : 09922-75222

3.	Companion flange
4.	Socket

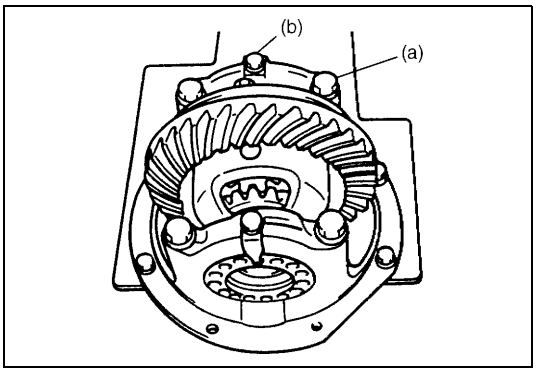

9) Torque bearing cap bolts to specified torque and install bearing lock plates.

Tightening torque
Bearing cap bolts
(a) : 85 N·m (8.5 kg-m, 61.5 lb-ft)
Lock plate bolts
(b) : 11.5 N·m (1.15 kg-m, 8.5 lb-ft)

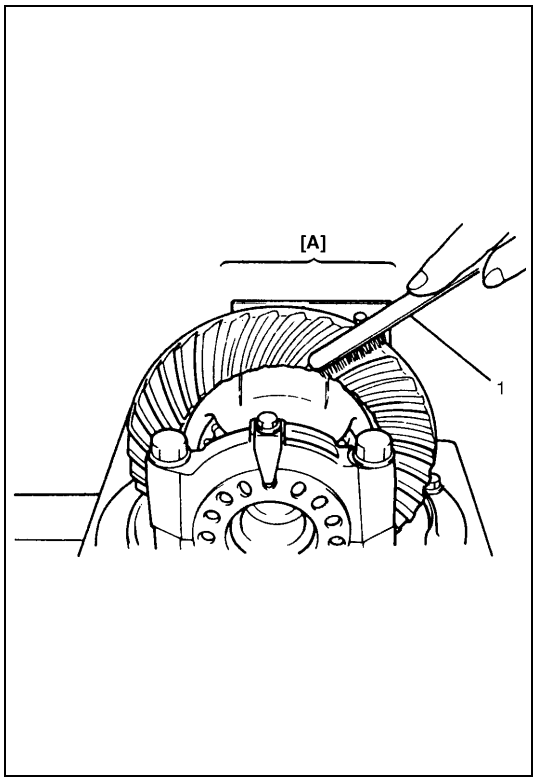

10) As final step, check gear tooth contact as follows.

CAUTION:

When applying red lead paste to teeth, be sure to paint tooth surfaces uniformly. The paste must not be too dry or too fluid.

a) After cleaning tooth surface of about 10 teeth in [A] range, paint them with gear marking compound evenly by using brush (1) or sponge etc.

NOTE:

Be careful not to turn drive bevel gear more than one full revolution, for it will hinder accurate check.

b) Turn gear to bring its painted part in mesh with drive bevel pinion and turn it back and forth by hand to repeat their contact.

c) Bring painted part up and check contact pattern, referring to following chart. If contact pattern is not normal, readjust or replace as necessary according to instruction in chart.

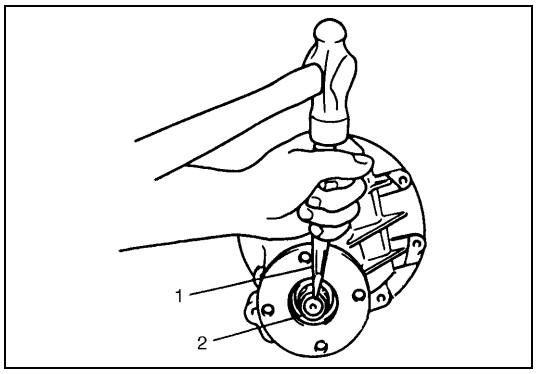

11) Upon completion of gear tooth contact check, caulk flange nut (2) with caulking tool (1) and hammer.

TOOTH CONTACT PATTERN	DIAGNOSIS AND REMEDY
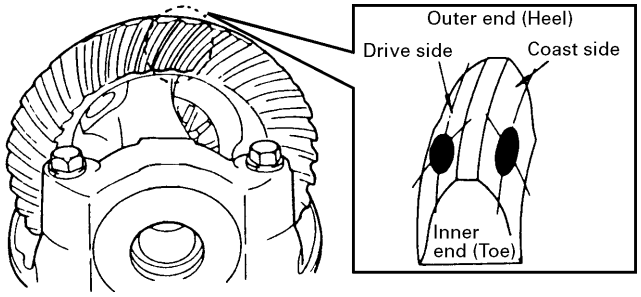	NORMAL

TOOTH CONTACT PATTERN	DIAGNOSIS AND REMEDY
	HIGH CONTACT Pinion is positioned too fat from the center of drive bevel gear. 1) Increase thickness of pinion height adjusting shim and position pinion closer to gear center. 2) Adjust drive bevel gear backlash to specification. 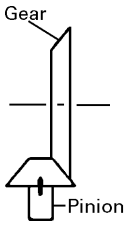
	LOW CONTACT Pinion is positioned too close to the center of drive bevel gear. 1) Decrease thickness of pinion height adjusting shim and position pinion farther from gear center. 2) Adjust drive bevel gear backlash to specification. 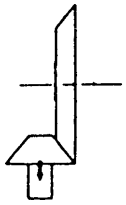
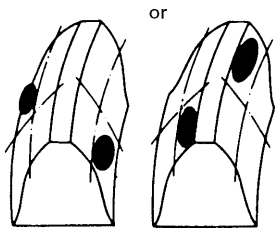	These contact patterns indicate that the “offset” of differential carrier is too much or too little. The remedy is to replace the carrier with a new one.
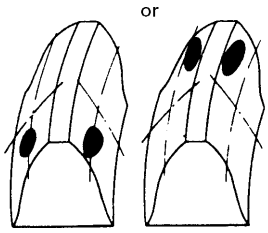	These contact patterns, located on toe or heel on both drive and coast sides, mean that 1) both pinion and gear are defective, 2) carrier is not true and square, or 3) gear is not properly seated on differential case. The remedy is to replace the defective member.
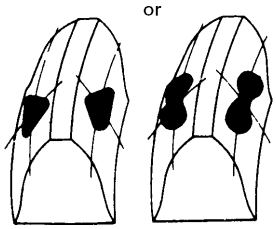	Irregular patterns: If the pattern is not oval, it means that bevel gear is defective. High or low spots on tooth surfaces or on the seat of bevel gear are the cause of irregular patterns appearing on some teeth. The remedy is to replace the pinion and gear set and, if the seat is defective, so is transfer case.

Tightening Torque Specification

Fastening part	Tightening torque		
	N•m	kg-m	lb-ft
Rear differential oil drain plug	27	2.7	19.5
Rear differential oil level/filler plug	50	5.0	36.5
Differential carrier bolts	23	2.3	17.0
Propeller shaft bolts	50	5.0	36.5
Differential case bolts	41	4.1	30.0
Drive bevel gear bolts	85	8.5	61.5
Flange nut	100 – 400	10 – 40	72 – 289
Bearing cap bolts	85	8.5	61.5
Lock plate bolts	11.5	1.15	8.5

Required Service Material

Material	Recommended SUZUKI product (Part Number)	Use
Thread lock cement	THREAD LOCK CEMENT 1322 (99000-32110)	• Drive bevel gear bolts • Differential case bolts
Lithium grease	SUZUKI SUPER GREASE A (99000-25010)	Oil seal lip
Sealant	SUZUKI BOND NO. 1215 (99000-31110)	• Rear differential drain plug • Mating surface of differential carrier • Mating surface of rear axle housing • Differential carrier bolts

Special Tool

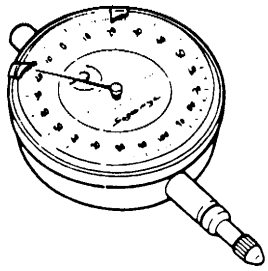	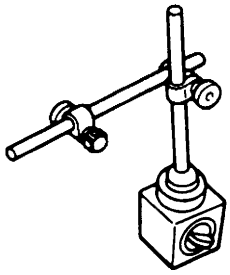	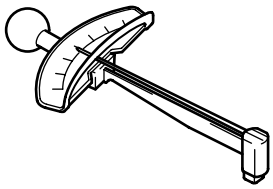	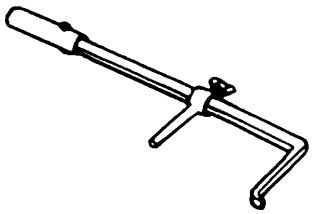
09900-20607 Dial gauge	09900-20701 Magnetic stand	09900-23107 Torque wrench	09913-50121 Oil seal remover

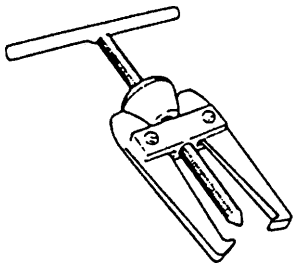 09913-60910 Bearing puller	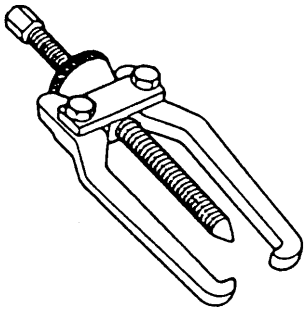 09913-65135 Bearing puller	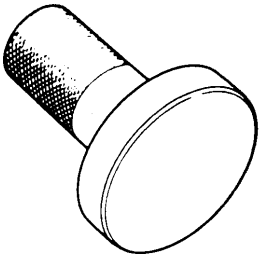 09913-75510 Bearing installer	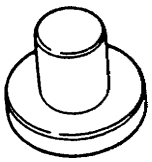 09913-85230 Bearing removing jig
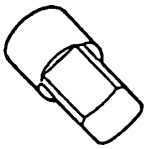 09915-24550 Adapter socket	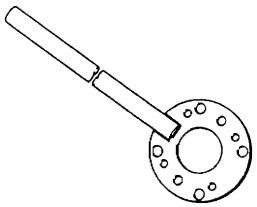 09922-66020 Flange holder	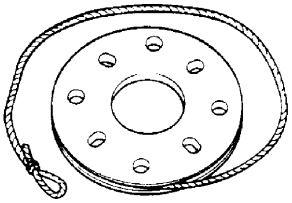 09922-75222 Preload adjuster	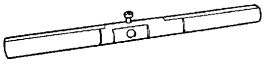 09922-76120 Dummy shaft
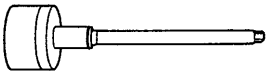 09922-76140 Bevel pinion shaft	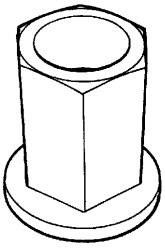 09922-76150 Bevel pinion nut	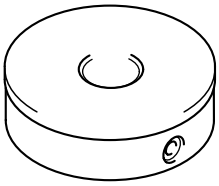 09922-76230 Bearing gear dummy	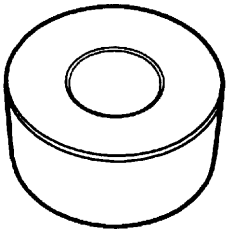 09922-76310 Rear collar
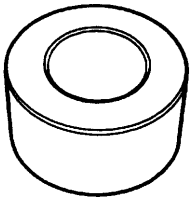 09922-76320 Rear collar	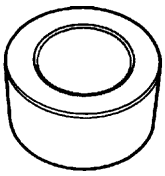 09922-76340 Rear collar	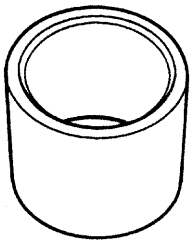 09922-76410 Front collar	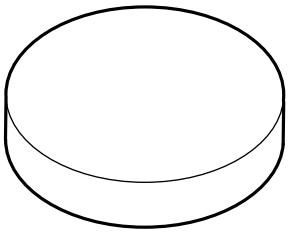 09922-76550 Gauge block

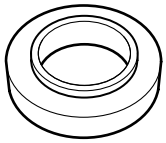 09924-07730 Bearing installer	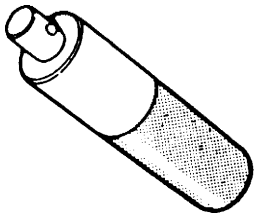 09924-74510 Installer attachment	 09925-58210 Oil seal installer	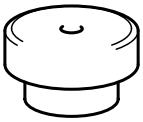 09926-37610-003 Bearing remover attachment
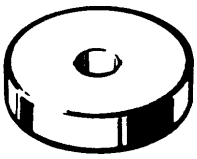 09926-68310 Bearing installer	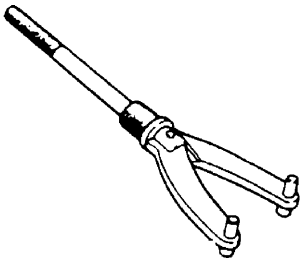 09930-40113 Rotor holder	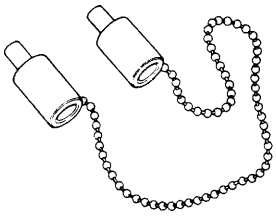 09930-40120 Attachment	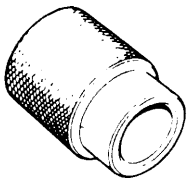 09940-53111 Bearing installer
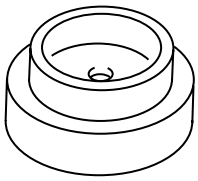 09944-66010 Oil seal installer	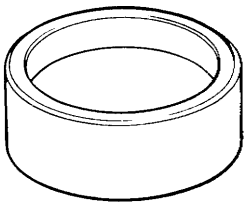 09944-66020 Bearing installer	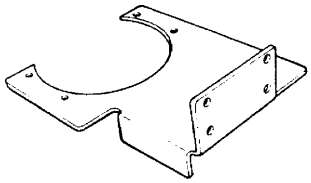 09944-76010 Differential carrier holder	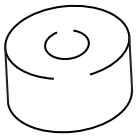 09951-16060 Bush remover
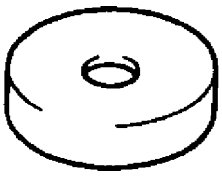 09951-46010 Oil seal installer			

SECTION 8

BODY ELECTRICAL SYSTEM

WARNING:

For vehicles equipped with Supplement Restraint (Air Bag) System

- **Service on and around the air bag system components or wiring must be performed only by an authorized SUZUKI dealer. Refer to "Air Bag System Components and Wiring Location View" under "General Description" in air bag system section in order to confirm whether you are performing service on or near the air bag system components or wiring. Please observe all WARNINGS and "Service Precautions" under "On-Vehicle Service" in air bag system section before performing service on or around the air bag system components or wiring. Failure to follow WARNINGS could result in unintentional activation of the system or could render the system inoperative. Either of these two conditions may result in severe injury.**
- **Technical service work must be started at least 90 seconds after the ignition switch is turned to the "LOCK" position and the negative cable is disconnected from the battery. Otherwise, the system may be activated by reserve energy in the Sensing and Diagnostic Module (SDM).**

CONTENTS

Diagnosis 8-3
- Headlight 8-3
- Headlights with Leveling System (If Equipped) 8-3
- Rear Fog Light (If Equipped) 8-3
- Turn Signal and Hazard Warning Lights 8-4
- Clearance, Tail and License Plate Lights 8-4
- Back-up Light 8-4
- Brake Lights 8-5
- Tachometer and ECM 8-5
- Speedometer and VSS 8-5
- Fuel Meter and Fuel Gauge Unit 8-5
- Engine Coolant Temp. (ECT) Meter and ECT Sensor 8-5
- Oil Pressure Light 8-6
- Brake and Parking Brake Warning Light 8-6
- Seat Belt Warning Light 8-6
- Rear Window Defogger (If Equipped) 8-7
- Front Wiper and Washer 8-7
- Rear wiper and washer (If equipped) 8-7
- Power Window Control System (If Equipped) 8-7
- Power Door Lock System (If Equipped) 8-8
- Power Door Lock System with Keyless Entry System (If Equipped) 8-8
- Power Door Mirror Control System 8-9
- Door Mirror Heater (If Equipped) 8-9
- Front Seat Heater (If Equipped) 8-9
- Cigarette Lighter 8-9
- Interior Lights 8-10

On-Vehicle Service 8-11
- Headlight 8-11
  - Headlight switch 8-11
  - Headlight 8-12
  - Bulb replacement 8-12
  - Headlight aiming adjustment with screen 8-13
- Headlights with Leveling System (If Equipped) 8-14
  - Leveling switch 8-14
  - Leveling actuator 8-14
- Turn Signal and Hazard Warning Lights System 8-14
  - Turn signal and hazard warning lights system circuit inspection 8-14
  - Turn signal light switch 8-16
  - Hazard switch 8-16
- Stop (Brake) Lamp 8-16
  - Stop (brake) lamp switch 8-16
- Rear Fog Light (If Equipped) 8-17
  - Rear fog light switch 8-17
- Ignition Switch 8-17
- Combination Meter 8-18
- Fuel Meter/Fuel Gauge Unit 8-19
  - Fuel level meter 8-19
  - Fuel sender gauge 8-20
- Engine Coolant Temperature Meter and Sensor Unit 8-20
  - Engine coolant temperature meter 8-20
  - Engine coolant temperature sensor 8-21
- Oil Pressure Warning Light 8-21
  - Oil pressure switch 8-21
- Brake and Parking Brake Warning Light 8-22
  - Brake fluid level switch 8-22

Parking brake switch 8-22
Seat Belt Warning Light (If Equipped)..... 8-22
Seat belt switch 8-22
Rear Window Defogger..... 8-22
Defogger switch 8-22
Defogger wire..... 8-23
Wiper and Washer 8-24
Front wiper/washer switch..... 8-25
Wiper motor..... 8-28
Washer pump..... 8-29
Rear Wiper and Washer 8-30
Wiper and washer switch 8-30
Rear wiper motor..... 8-30
Rear wiper intermittent relay 8-31
Power Window Control System
(If Equipped) 8-33
Breaker..... 8-33
Power window main switch 8-33
Power Door Lock System (If Equipped)..... 8-34
Power door lock system component
location..... 8-34
Power door lock system operation
inspection..... 8-35
Power door lock system circuit
inspection..... 8-35
Driver side key cylinder switch 8-36
Power door lock actuator 8-37
Power Door Lock System with Keyless
Entry System (If Equipped).....8-38
Power door lock system with keyless
entry system component location 8-38
System Description.....8-38
Change of signal mode.....8-39
Keyless entry system operation
inspection.....8-39
Keyless entry system circuit inspection 8-40
Transmitter.....8-41
Driver side key cylinder switch.....8-42
Power door lock actuator 8-42
Door switch 8-42
Power Door Mirror Control System
(If Equipped) 8-43
Mirror switch.....8-43
Door mirror actuator.....8-43
Door Mirror Heater (If Equipped) 8-44
Mirror heater switch 8-44
Mirror heater (if equipped) 8-44
Front Seat Heater (If Equipped).....8-45
Seat heater switch (driver and
passenger side) 8-45
Seat heater wire.....8-45

Diagnosis

Headlight

Condition	Possible Cause	Correction
Headlights do not light up	Bulb blown	Check bulb.
	Headlight switch faulty	Check headlight switch.
	Headlight R and L fuses blown	After checking short circuit replace fuse.
	Wiring or grounding faulty	Repair circuit.
Only one headlight does not light up	Bulb blown	Check bulb.
	Headlight R or L fuse blown	After checking short circuit replace fuse.
	Headlight switch faulty	Check headlight switch.
	Wiring or grounding faulty	Repair circuit.
Only one beam ("Hi" or "Lo") does not light	Bulb burnt out	Replace bulb.
	Lighting or dimmer switch faulty	Check switch.

Headlights with Leveling System (If Equipped)

Condition	Possible Cause	Correction
Both headlights do not move	"WIPER WASHER" fuse blown	After checking short circuit, replace fuse.
	Leveling switch faulty	Check switch or replace it as necessary.
	Supply voltage too low	Recharge or replace battery.
One of headlights (either Right or Left) does not move	Socket, wiring or grounding faulty	Repair as necessary.
	Actuator faulty	Replace actuator.
	Vehicle body around headlight deformed	Repair body.
	Headlight assembly itself deformed	Replace headlight assembly.

Rear Fog Light (If Equipped)

Condition	Possible Cause	Correction
Rear fog light does not come on	"FOG" or "REAR FOG" fuse blown	After checking short circuit, replace fuse.
	Rear fog light switch faulty	Check fog light switch.
	Lighting switch faulty	Check switch.
	Wiring or grounding faulty	Repair as necessary.
	Bulb blown	Replace.

Turn Signal and Hazard Warning Lights

Condition	Possible Cause	Correction
Flash rate high or one side only flashes	Bulb blown on “flash rate high”-side	Replace bulb.
	Incorrect bulb	Replace bulb.
	Turn signal/hazard warning relay faulty	Check system referring to “Turn Signal and Hazard Warning Lights System” in this section.
	Wiring or grounding faulty	
Flash rate low	Supply voltage low	Check charging system.
	Turn signal/hazard relay faulty	Check system referring to “Turn Signal and Hazard Warning Lights System” in this section.
One side only flashes	Turn signal switch faulty	Check system referring to “Turn Signal and Hazard Warning Lights System” in this section.
	Turn signal and hazard warning relay faulty	
	Wiring or grounding faulty	
No flashing	“HAZARD” and/or “METER” fuse(s) blown	After checking short circuit, replace fuse.
	Turn signal/hazard relay faulty	Check system referring to “Turn Signal and Hazard Warning Lights System” in this section.
	Combination switch or hazard switch faulty	
	Wiring or grounding faulty	

Clearance, Tail and License Plate Lights

Condition	Possible Cause	Correction
All lights do not light up	Bulb(s) blown	Check bulb.
	“TAIL” fuse blown	After checking short circuit, replace fuse.
	Wiring or grounding faulty	Repair circuit.
Some lights do not light up	Bulb(s) blown	Check bulb.
	Wiring or grounding faulty	Repair circuit.

Back-up Light

Condition	Possible Cause	Correction
Back-up lights do not light up	Bulb(s) blown	Check bulb.
	“BACK” fuse blown	After checking short circuit, replace fuse.
	Back-up light switch faulty	Check switch.
	Wiring or grounding faulty	Repair circuit.
Back-up lights stay on	Back-up light switch faulty	Check or replace switch.
	Wiring or grounding faulty	Repair circuit.

Brake Lights

Condition	Possible Cause	Correction
Brake lights do not light up	Bulb(s) blown	Check bulb.
	“STOP” fuse blown	After checking short circuit, replace fuse.
	Brake light switch faulty	Check switch.
	Wiring or grounding faulty	Repair circuit.
Brake lights stay on	Brake light switch faulty	Check, adjust or replace switch.
	Wiring or grounding faulty	Repair circuit.

Tachometer and ECM

Condition	Possible Cause	Correction
Tachometer shows no operation	“METER” fuse blown	After checking short circuit, replace fuse.
	Wiring or grounding faulty	Repair circuit.
	Tachometer faulty	Replace tachometer.
	ECM or other controller faulty	Check ECM and other controller.

Speedometer and VSS

Condition	Possible Cause	Correction
Speedometer shows no operation	“METER” fuse blown	After checking short circuit, replace fuse.
	VSS faulty	Check VSS.
	Wiring or grounding faulty	Repair.
	Speedometer faulty	Replace speedometer.

Fuel Meter and Fuel Gauge Unit

Condition	Possible Cause	Correction
Fuel meter shows no operation	“METER” fuse blown	After checking short circuit, replace fuse.
	Fuel gauge unit	Check fuel gauge unit.
	Fuel meter	Check fuel meter.
	Wiring or grounding	Repair circuit.

Engine Coolant Temp. (ECT) Meter and ECT Sensor

Condition	Possible Cause	Correction
Engine coolant temp. meter shows no operation	“METER” fuse blown	After checking short circuit, replace fuse.
	ECT meter faulty	Check ECT meter.
	ECT sensor faulty	Check ECT sensor.
	Wiring or grounding faulty	Repair circuit.

Oil Pressure Light

Condition	Possible Cause	Correction
Oil pressure warning light does not light up when ignition switch is on at engine off	Bulb in combination meter blown	Check bulb.
	“METER” fuse blown	After checking short circuit, replace fuse.
	Combination meter wiring circuit faulty	Check combination meter wiring circuit.
	Oil pressure switch faulty	Check oil pressure switch.
	Wiring or grounding faulty	Repair circuit.

Brake and Parking Brake Warning Light

Condition	Possible Cause	Correction
Brake warning light does not light up when fluid low level	Bulb in combination meter blown	Check bulb.
	“METER” fuse blown	After checking short circuit, replace fuse.
	Combination meter wiring circuit faulty	Check combination meter wiring circuit.
	Brake fluid level switch faulty	Check brake fluid level switch.
	Wiring or grounding faulty	Repair circuit.
Brake warning light does not light up when cranking (when ignition switch at ST position)	Ignition switch faulty	Check ignition switch.
	Combination meter wiring circuit faulty	Check combination meter wiring circuit.
	Wiring or grounding faulty	Repair circuit.
Brake warning light does not light up when parking brake pull up	Bulb in combination meter blown	Check bulb.
	“METER” fuse blown	After checking short circuit, replace fuse.
	Combination meter wiring circuit faulty	Check combination meter wiring circuit.
	Parking brake switch faulty	Check parking brake switch.
	Wiring or grounding faulty	Repair circuit.

Seat Belt Warning Light

Condition	Possible Cause	Correction
Seat belt warning light does not light up	Bulb in combination meter blown	Check bulb.
	Seat belt switch faulty	Check seat belt switch.
	“METER” fuse blown	After checking short circuit, replace fuse.
	Wiring or grounding faulty	Repair circuit.

Rear Window Defogger (If Equipped)

Condition	Possible Cause	Correction
Defogger does not operate	“REAR DEFG” fuse blown	After checking short circuit, replace fuse.
	Defogger wire faulty	Check heat wire.
	Rear window defogger switch faulty	Check switch.
	Wiring or grounding faulty	Repair circuit.

Front Wiper and Washer
Rear wiper and washer (If equipped)

Condition	Possible Cause	Correction
Wiper malfunctions or does not return to its original position	“WIPER-WASHER” fuse blown	After checking short circuit, replace fuse.
	Wiper motor faulty	Check wiper motor.
	Rear wiper intermittent relay faulty	Check relay.
	Wiper switch faulty	Check wiper switch.
	Wiring or grounding faulty	Repair circuit.
Washer malfunctions	Washer hose or nozzle clogged	Clean or repair clogged hose or nozzle.
	“WIPER-WASHER” fuse blown	After checking short circuit, replace fuse.
	Washer motor faulty	Check washer motor.
	Rear wiper intermittent relay faulty	Check relay.
	Wiper switch faulty	Check wiper switch.
	Wiring or grounding faulty	Repair circuit.

Power Window Control System (If Equipped)

Condition	Possible Cause	Correction
All power windows do not operate	“POWER WINDOW” fuse blown	After checking short circuit, replace fuse.
	Ignition (main) switch faulty	Check ignition (main) switch.
	Power window switch faulty	Check power window switch.
	Wiring or grounding faulty	Repair circuit.
Only one power window does not operate	Wiring and/or coupler faulty	Check wiring and/or coupler.
	Power window switch (main or sub) faulty	Check power window switch.
	Window actuator faulty	Check window actuator.
	Grounding faulty	Repair.

Power Door Lock System (If Equipped)

Condition	Possible Cause	Correction
All are not locked/ unlocked by only driver side key cylinder switch	"D/L" fuse blown	After checking short circuit, replace fuse.
	Driver side key cylinder switch faulty	Check system referring to "Power Door Lock System" in this section.
	Power door lock controller faulty	
	Wiring or ground faulty	
Only one door is not locked/unlocked	Power door lock actuator faulty	Check system referring to "Power Door Lock System" in this section.
	Wiring or grounding faulty	

Power Door Lock System with Keyless Entry System (If Equipped)

Condition	Possible Cause	Correction
All are not locked/ unlocked by only driver side key cylinder switch	"D/L" fuse blown	After checking short circuit, replace fuse.
	Driver side key cylinder switch faulty	Check system referring to "Power Door Lock System" in this section.
	Power door lock controller faulty	
	Wiring or ground faulty	
Only one door is not locked/unlocked	Power door lock actuator faulty	Check system referring to "Power Door Lock System" in this section.
	Wiring or grounding faulty	
All doors are not locked/unlocked by only keyless entry transmitter	Transmitter battery dead	Replace battery.
	Transmitter faulty	Replace transmitter.
	Code registration error	Perform code registration.
	Door switch faulty	Check system referring to "Power Door Lock System" in this section.
	Key remainder switch (in ignition switch) faulty	
	Power door lock controller faulty	
	Wiring or grounding faulty	
Turn signal lights are not flashed when doors are locked/ unlocked by transmitter	Keyless entry system is in interior light signal mode	Change signal mode referring to "Change of Signal Mode" in this section, if necessary.
	Turn signal and hazard warning system faulty	Check system referring to "Turn Signal and Hazard Warning Light System" in this section.
	Power door lock controller faulty	Check system referring "Power Door Lock System With Keyless Entry System" in this section.
	Wiring or grounding faulty	
Interior light does not turn ON when interior light switch is at DOOR position and doors are unlocked by transmitter	Power door lock controller faulty	Check system referring to "Power Door Lock System With Keyless Entry System" in this section.
	Wiring or grounding faulty	

Power Door Mirror Control System

Condition	Possible Cause	Correction
All power mirrors do not operate	"CIGAR" fuse blown	After checking short circuit, replace fuse.
	Power door mirror switch faulty	Check switch.
	Wiring or grounding faulty	Repair as necessary.
One power mirror does not operate	Power door mirror switch faulty	Check switch.
	Actuator (power door mirror motor) faulty	Check actuator.
	Wiring or grounding faulty	Repair as necessary.

Door Mirror Heater (If Equipped)

Condition	Possible Cause	Correction
All door mirrors mist when rear defogger switch is ON	"Cigar" fuse blown	After checking short circuit, replace fuse.
	Rear defogger switch faulty	Check switch.
	Door mirror heater relay faulty	Check relay
	Wiring or grounding faulty	Repair circuit.
One door mirror mists when rear defogger switch is ON	Mirror heater faulty	Check actuator.
	Wiring or grounding faulty	Repair circuit.

Front Seat Heater (If Equipped)

Condition	Possible Cause	Correction
Both seat back and cushion do not become hot although seat heater switch is ON	"Heater" and/or "Seat Heater" fuse(s) blown	After checking short circuit, replace fuse.
	Seat heater switch faulty	Check switch.
	Wiring or grounding faulty	Repair circuit.
Only seat back does not become hot although seat heater switch is ON	Seat heater circuit in seat back faulty	Check seat heater.
	Wiring or grounding faulty	Repair circuit.
Only seat cushion does not become hot although seat heater switch is ON	Seat heater circuit in seat back and/or seat cushion faulty	Check seat heater.
	Wiring or grounding faulty	Repair circuit.

Cigarette Lighter

Condition	Possible Cause	Correction
Cigarette lighter shows no operation	"CIGAR" fuse blown	After checking short circuit, replace fuse.
	Ignition switch faulty	Check ignition switch.
	Cigarette lighter faulty	Check cigarette lighter.
	Wiring or grounding faulty	Repair circuit.

Interior Lights

Condition	Possible Cause	Correction
Interior lights do not light up	Bulbs blown	Replace.
	“Dome” fuse blown	After checking short circuit, replace fuse.
	Interior light switch faulty	Check switch.
	Door switch faulty	Check switch.
	Wiring or grounding	Repair.
One of interior light does not light up	Bulb blown	Replace.
	Interior light switch faulty	Check switch.
	Door switch faulty	Check switch.
	Wiring or grounding	Repair.

On-Vehicle Service

Headlight

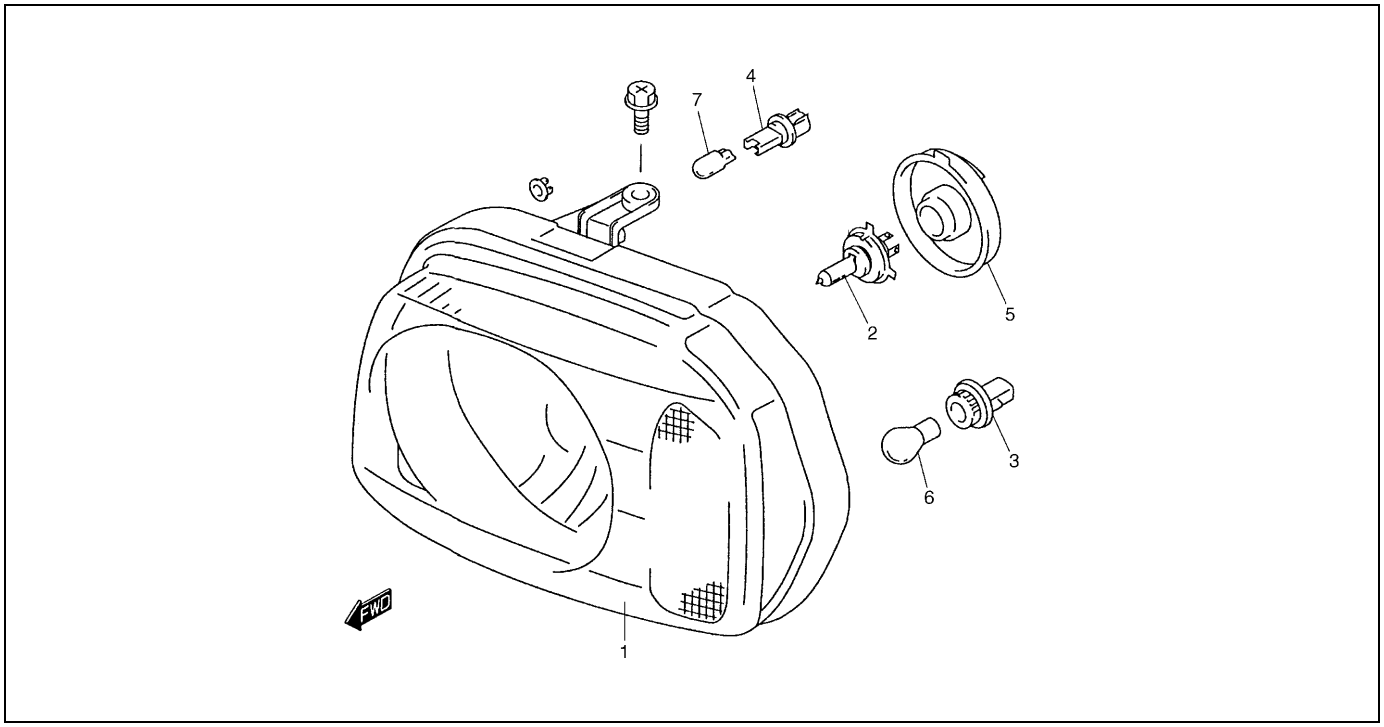

1. Headlight assembly	3. Turn signal light socket	5. Socket cover	7. Position light bulb
2. Halogen bulb	4. Position light socket	6. Turn signal light bulb	

Headlight switch

INSPECTION

1) Disconnect negative (–) cable at battery.
2) Disconnect combination switch lead wire couplers from junction/fuse block.
3) Use a circuit tester to check the continuity at each switch position shown below.

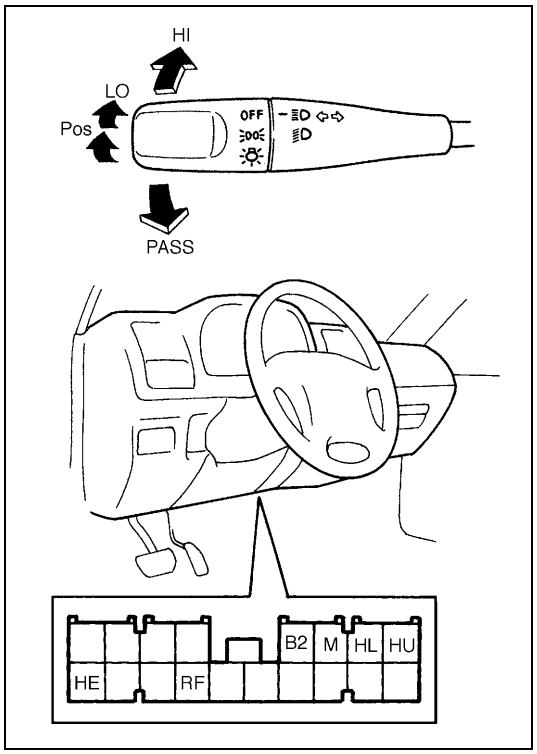

Switch Position \ Terminal / Wire Color	HE	HU	HL	RF
	B	R	R/W	Br/Y
Passing	○	○		
Low Beam			○	○
Main (High) Beam		○		○

Switch Position \ Terminal / Wire Color	HE	RF	B2	M
	B	Br/Y	W	R/Y
OFF				
			○	○
	○	○	○	○

REMOVAL AND INSTALLATION

Refer to “Combination Switch/Contact Coil and Combination Switch Assembly” in Section 3C for details.

Headlight

REMOVAL

1) Disconnect negative cable at battery.
2) Remove front bumper.

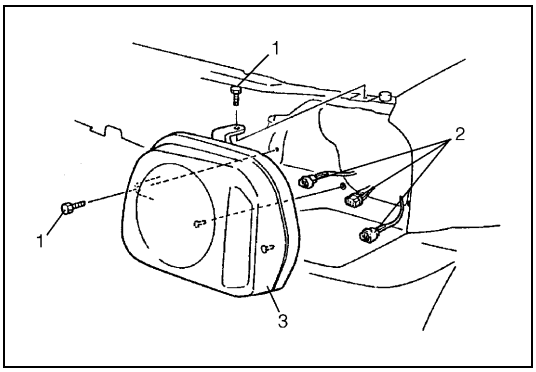

3) Remove headlight mounting bolts (1).
4) Detach headlight assembly from vehicle.
5) Disconnect couplers (2) from headlight assembly.
6) Remove headlight assembly (3).

INSTALLATION

Reverse removal procedure for installation.

Bulb replacement

WARNING:

- **To avoid danger of being burned, don't touch when the bulb is hot.**
- **Don't touch glass surface of bulb, to avoid deteriorate as the case may be unclear when bulb light on at dirty condition.**

1) Disconnect negative (–) cable at battery.
2) Disconnect harness from bulb.

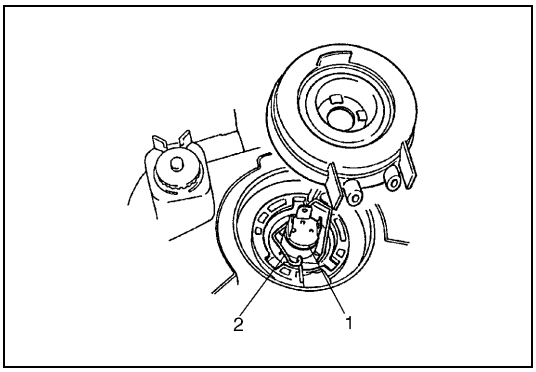

3) Remove socket cover and bulb (1).

2. Spring

4) Replace bulb and assemble all removed parts.

Headlight aiming adjustment with screen

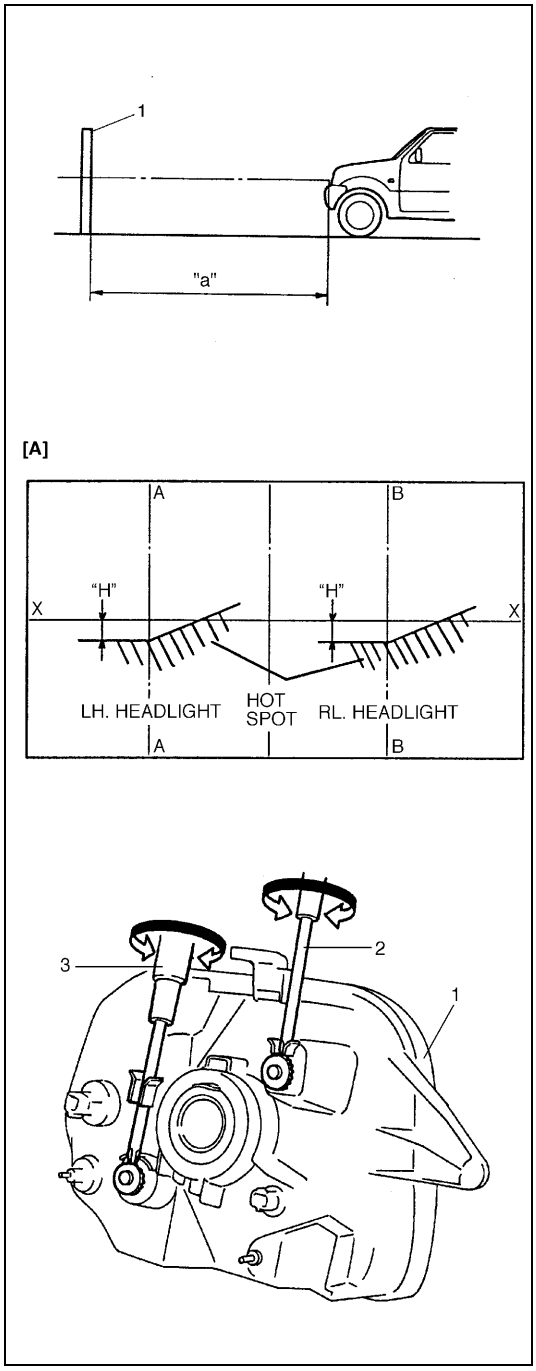

NOTE:

- **Unless otherwise obligated by local regulations, adjust headlight aiming according to following procedure.**
- **After replacing headlight, be sure to adjust aiming.**

1) Before adjustment, make sure the following.
   a) Place vehicle on a flat surface in front of screen (1) ahead of headlight surface.

   Distance between screen and headlight
   "a" : 10 m (32.8 ft.)

   b) Adjust air pressure of all tires to a specified value respectively.
   c) Bounce vehicle body up and down by hand to stabilize suspension.
   d) Carry out with one driver aboard.

   Driver's weight : 75 kg (165 lb)

   e) Turn headlight leveling switch to "0" position.

2) Check to see if hot spot (high intensity zone) of each low beam axis falls as illustrated.

   Hot spot specification
   "H" : Approx. 130 mm (5.15 in.)

3) If headlight aiming is not set properly, align it to specification by adjusting aiming screw and aiming gear.

1.	Headlight assembly
2.	Aiming (for right/left adjustment)
3.	Aiming (for up/down adjustment)
[A] :	The illustration shows LH steering vehicle. And RH steering vehicle is symmetrical
X-X :	Horizontal center line of headlights bulb
A-A :	Vertical center line of left headlight bulb
B-B :	Vertical center line of right headlight bulb

Headlights with Leveling System (If Equipped)

Leveling switch

INSPECTION

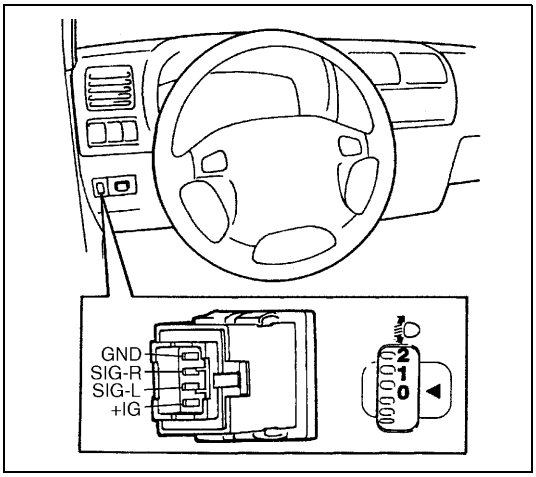

Check for resistance between terminals at each switch position as shown below. If check result is not as specified, replace.

Position	Terminals	Resistance (KΩ)
–	+IG and GND	3.7 – 5.6
0	• SIG-R and GND • SIG-L and GND	4.0 – 4.5
1		3.4 – 3.8
2		2.8 – 3.2
3		2.2 – 2.5
4		1.6 – 1.8

Leveling actuator

INSPECTION

All headlight system couplers connected including leveling actuator and switch, and at Ignition switch ON, listen to the leveling actuator sound on both actuators according to the movement of the leveling switch. If no sound is heard with the movement of the leveling switch, replace headlight assembly.

Turn Signal and Hazard Warning Lights System

Turn signal and hazard warning lights system circuit inspection

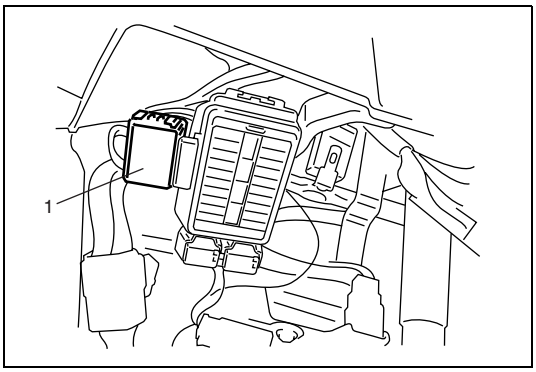

1) Disconnect negative (–) cable from battery.
2) Disconnect turn signal and hazard warning relay (1) connector “G34”.

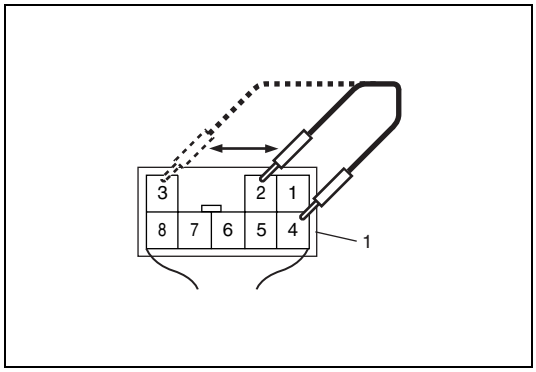

3) Connect negative (–) cable to battery.

4) Confirm that right or left side turn signal light turn on when connect “G34-4” terminal to “G34-2” or “G34-3” terminal with service wire.
If turn signal light does not turn on, check bulb or repair applicable circuit.

1. Turn signal and hazard warning relay connector “G34” viewed from harness side

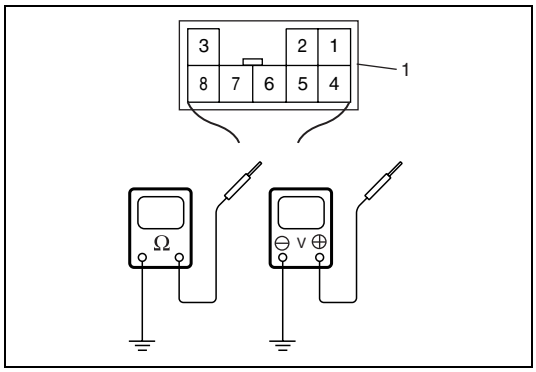

5) Check that voltage and continuity between the following terminals and body ground are specifications under each condition.
If check result is not as specified, repair applicable circuit.
If check result is OK, replace turn signal and hazard warning relay and recheck.

1. Turn signal and hazard warning relay connector “G34” viewed from harness side

Turn signal and hazard warning lights system circuit check

Terminal	Wire	Circuit	Specification	Condition
G34-1	BLK/RED	Ignition switch circuit	10 – 14 V	Ignition switch is ON position.
			0 – 1 V	Ignition switch is ON position.
G34-4	WHT/BLU	Power supply for turn signal and hazard warning lights	10 – 14 V	–
G34-5	GRN/YEL	Right side turn signal light switch circuit	Continuity	Turn signal light switch is R position.
			No continuity	Turn signal light switch is N or L position.
G34-6	GRN/RED	Left side turn signal light switch circuit	Continuity	Turn signal light switch is L position.
			No continuity	Turn signal light switch is N or R position.
G34-7	BLK	Ground	0 – 1 V	–
G34-8	YEL/BLU	Hazard warning switch and keyless entry system (if equipped) circuits	Continuity	Hazard warning switch is ON position.
				Approx. 1.2 sec. after pushing UNLOCK button on transmitter.
				Approx. 0.6 sec. after pushing LOCK button on transmitter.
			No continuity	Hazard warning switch is OFF position.

Turn signal light switch

INSPECTION

1) Disconnect negative cable at battery.
2) Disconnect combination switch lead wire coupler.
3) Use a circuit tester to check the continuity at each switch position shown below.

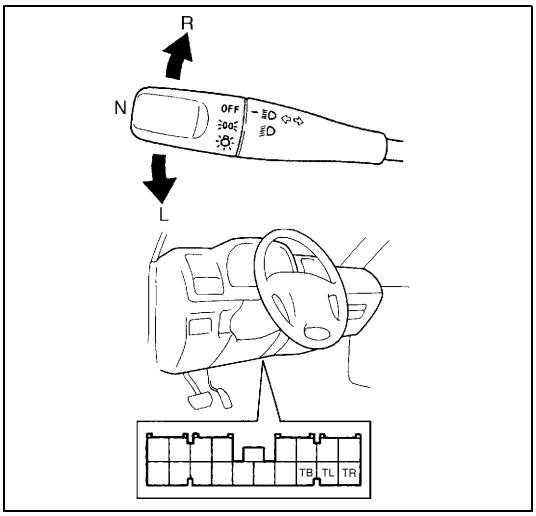

Switch Position \ Wire Color \ Terminal	TL	TB	TR
	G/R	G	G/Y
L	○	○	
N			
R		○	○

[A] : LH steering vehicle shown

REMOVAL AND INSTALLATION

Refer to “Combination Switch/Contact Coil and Combination Switch Assembly” in Section 3C for details.

Hazard switch

INSPECTION

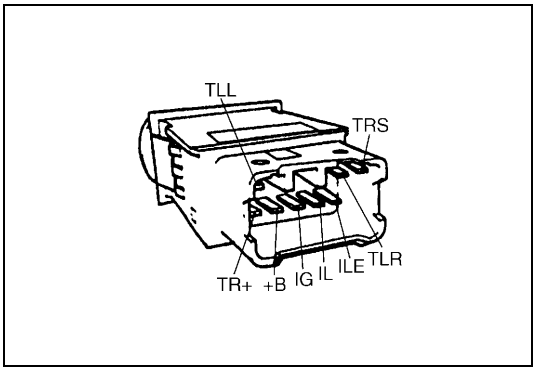

Check continuity between terminals at each switch position shown below.

Hazard SW \ Terminal	+B	TR+	IG	TRS	TLL	TLR	IL	ILE
OFF		○	○				○	○
ON	○	○					○	○

Stop (Brake) Lamp

Stop (brake) lamp switch

INSPECTION

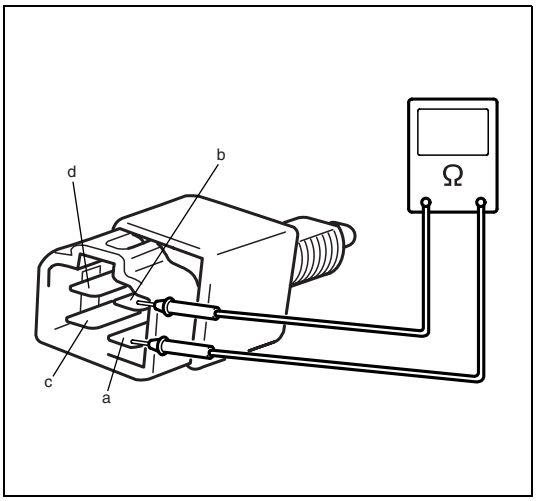

Check stop lamp (brake) switch for continuity as shown below.
If check result is not as specified, replace switch.

Type 1 (Connector color: black):

Shaft (1) \ Terminal	a	b	c	d
FREE	○		○	
		○		○
PUSH				

Type 2 (Connector color: blue):

Shaft (1) \ Terminal	a	b	c	d
FREE	○	○	○	○
PUSH				

Rear Fog Light (If Equipped)

Rear fog light switch

INSPECTION

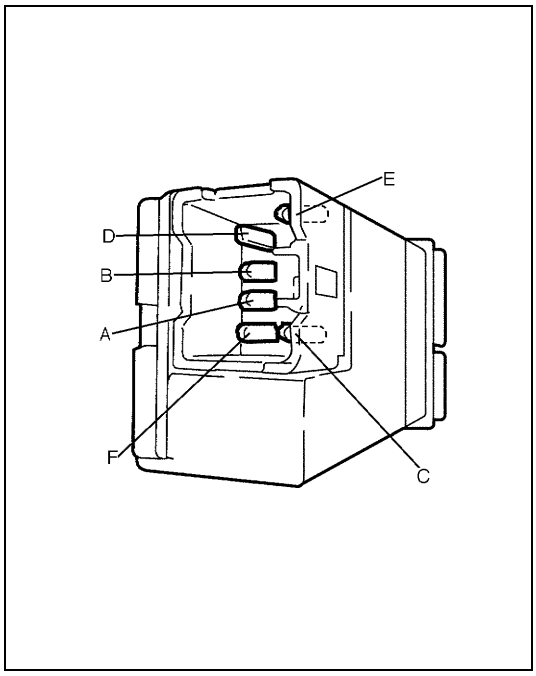

Use a circuit tester to check switch for continuity between terminals shown below.

RR FOG SW \ OFF SW \ TERMINAL		A	B	C	D	E	F
FREE	FREE		○		⊘	○	
			○		○	⊘	○
	PUSH		○		⊘	○	
				○		⊘	○
PUSH	FREE	○	○		⊘	○	
		○	⊘	○	○		
		○					○
	PUSH		○		⊘	○	
				○		⊘	○
RETURN	FREE	○	○		⊘	○	
		○	⊘	○	○		
		○					○
	PUSH		○		⊘	○	
				○		⊘	○

Ignition Switch

INSPECTION

1) Disconnect negative cable at battery.
2) Disconnect ignition switch lead wire coupler.
3) Use a circuit tester to check the continuity at each switch position. If any continuity is not obtained, replace ignition switch.

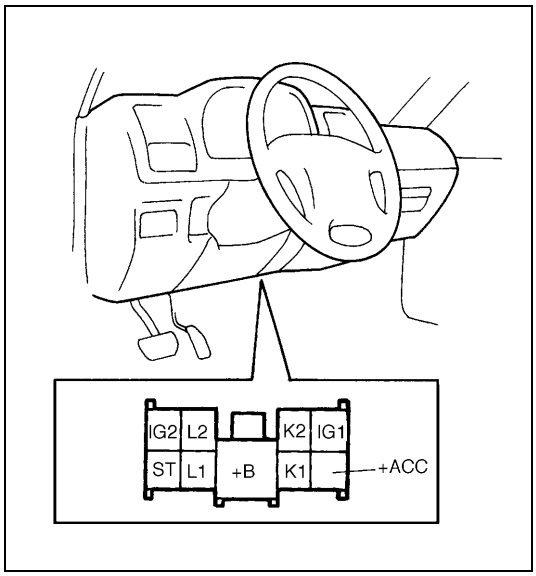

Key \ Position \ Terminal / Wire Color		+B1	+ACC	IG1	IG2	ST	L1	L2	K1	K2
		W/G	Bl	B/W	Y/B	B/Y	B	B	G	G
OUT	LOCK	○								
IN	ACC	○	○							
	ON	○	○	○	○				○	○
	START	○		○		○	○	○		

ACC : Accessory

REMOVAL AND INSTALLATION

Refer to “Steering Lock Assembly (Ignition Switch)” in Section 3C for details.

Combination Meter

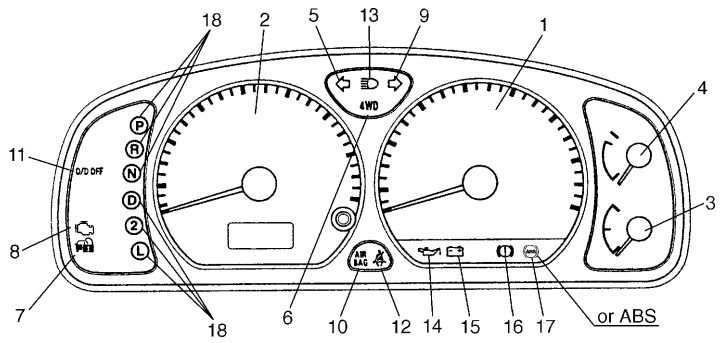

1. Tachometer	7. Immobilizer warning light (if equipped)	13. High beam light
2. Speedometer	8. CHECK ENGINE light	14. Oil pressure warning light
3. Fuel lever meter	9. Turn signal pilot light (RH)	15. Charge warning light
4. Water temperature meter	10. AIR BAG warning light (if equipped)	16. Brake warning light
5. Turn signal pilot light (LH)	11. O/D OFF light (A/T vehicle only)	17. ABS warning light (if equipped)
6. 4WD indicator (if equipped)	12. Fasten seat belt light (if equipped)	18. Shift position indicator (A/T vehicle, if equipped)

COMBINATION METER INTERNAL CIRCUITS AND COUPLERS

NOTE:

Terminal arrangement of coupler viewed from harness side.

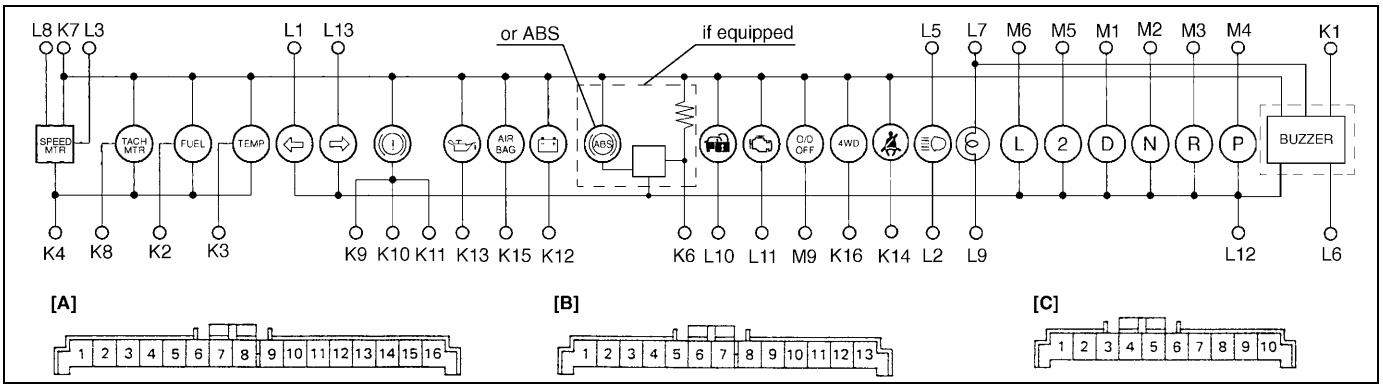

[A] : Connector K		[B] : Connector L		[C] : Connector M	
1. To ignition switch	Bl/G	1. To combination switch (turn L)	G/R	1. To transmission range switch (A/T vehicle, if equipped)	G/R
2. To fuel level gauge	Y/R	2. To combination switch (dimmer sw)	R	2. To transmission range switch (A/T vehicle, if equipped)	Or
3. To ECT sensor	Y/W	3. To VSS	Y/G	3. To transmission range switch (A/T vehicle, if equipped)	R
4. To ground	B/Or	4. Blank	–	4. To transmission range switch (A/T vehicle, if equipped)	Or/B
5. Blank	–	5. To main fuse	W/Bl	5. To transmission range switch (A/T vehicle, if equipped)	G
6. To ABS control module (if equipped)	R/Bl	6. To door switch	B/Y	6. To transmission range switch (A/T vehicle, if equipped)	G/W
7. To ignition switch	B/W	7. To combination switch (dimmer sw)	R/Y	7. Blank	–
8. To ECM	Br	8. To main fuse	W	8. Blank	–
9. To ignition switch	V/R	9. To ground	B	9. To TCM (A/T vehicle, if equipped)	Bl/Y
10. To brake fluid level switch	R/B	10. To ECM (if equipped)	R/G	10. Blank	–
11. To parking brake switch	R/G	11. To ECM	V/Y		
12. To alternator	W/R	12. To ground	B		
13. To oil pressure switch	Y/B or Y/Bl	13. To combination switch (turn R)	G/Y		
14. To seat belt switch (if equipped)	Lg				
15. To SDM (if equipped)	Bl				
16. To 4WD control module (if equipped)	Bl				

REMOVAL

1) Disconnect negative cable at battery.
2) Loosen steering column mounting bolts and nuts referring to “Steering Column Assembly” in Section 3C.

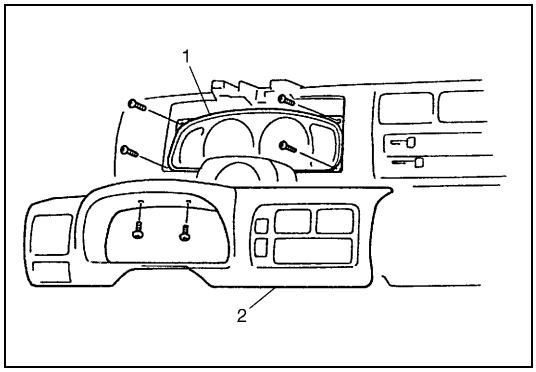

3) Remove meter cluster panel (2). Make sure to disconnect all couplers of switches and wires of cigarette lighter on meter cluster panel (2).
4) Disconnect couplers from combination meter (1).
5) Remove combination meter (1).

INSTALLATION

Reverse removal procedure for installation.

Fuel Meter/Fuel Gauge Unit

Fuel level meter

INSPECTION

1) Disconnect Y/R lead wire going to gauge unit.

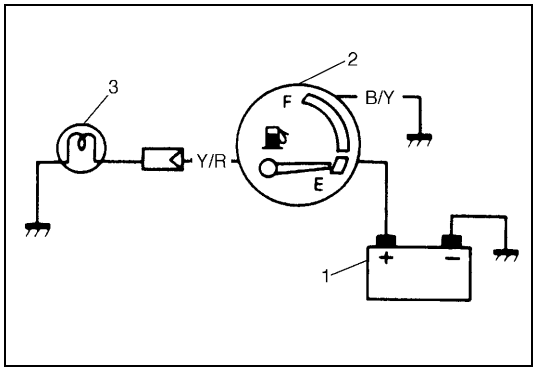

2) Use a bulb (12 V 3.4 W) (3) in position to ground lead wire as illustrated.

1.	Battery
2.	Fuel meter

3) Turn ignition switch ON.
   Make sure that bulb is lighted with meter pointer fluctuating several seconds thereafter. If meter is faulty, replace.

Fuel sender gauge

INSPECTION

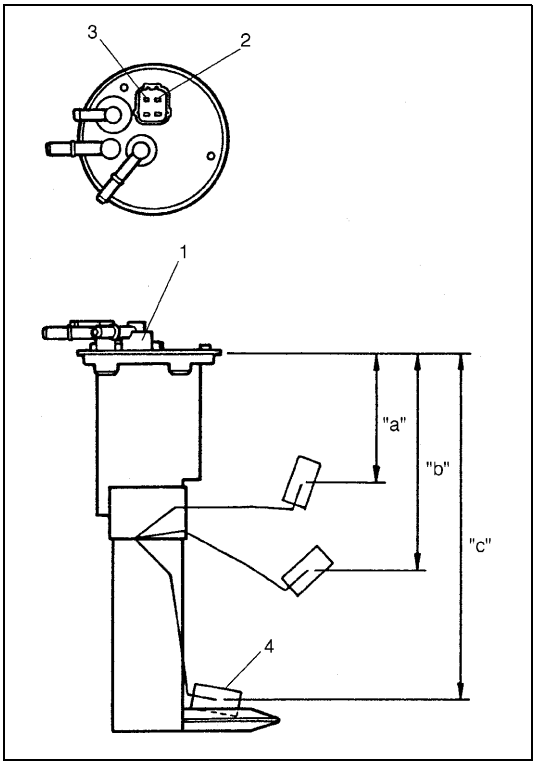

1) Remove fuel pump assembly (1) referring to “Fuel Pump Assembly” in Section 6C.
2) Use an ohmmeter to confirm that resistance of sender gauge unit changes with change of float position. If the measured value is out of specification, replace.

Fuel sender gauge specification

Float Position		Resistance (Ω)
Full Upper “a”	91.4 mm (4.03 in.)	2 – 4
Middle (1/2) “d”	154.8 mm (6.20 in.)	29.5 – 35.5
Full Lower “c”	263.5 mm (8.60 in.)	119 – 121

2. Fuel level gauge “+” terminal
3. Fuel level gauge “–” terminal
4. Float

Engine Coolant Temperature Meter and Sensor Unit

Engine coolant temperature meter

INSPECTION

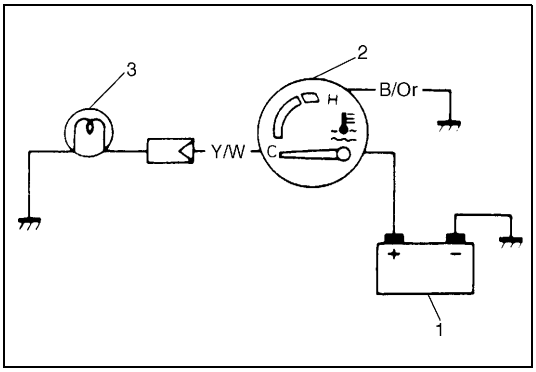

1) Disconnect Y/W lead wire going to sender gauge installed to thermostat case.
2) Use a bulb (12 V 3.4 W) (3) in position to ground wire as illustrated.

1. Battery
2. Engine coolant temperature meter

3) Turn main switch ON. Confirm that bulb is lighted with meter pointer fluctuating several seconds thereafter.
   If not, replace.

Engine coolant temperature sensor

REMOVAL

1) Disconnect negative cable at battery.
2) Drain cooling system.
3) Disconnect coupler from ECT sensor (1).
4) Remove ECT sensor from intake manifold.

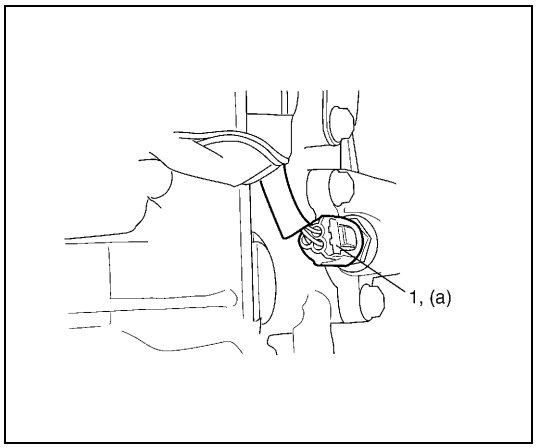

INSTALLATION

Reverse removal procedure for installation noting the following points.

- Clean mating surface of sensor and intake manifold.
- Check O-ring for damage and replace if necessary.
- Tighten ECT sensor to specified torque.

Tightening torque
ECT sensor (a) : 15 N·m (1.5 kg-m, 11.0 lb-ft)

INSPECTION

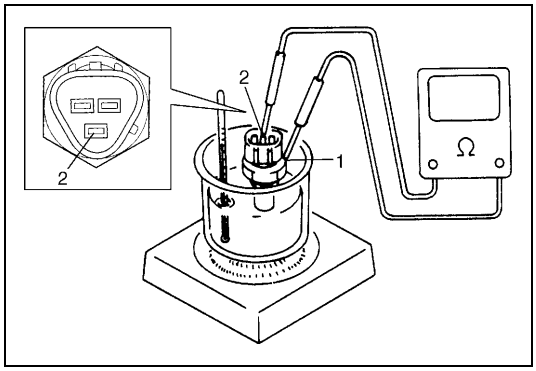

1) Warm up ECT sensor (1) observing resistance between sensor terminal (2) and sensor unit (1). Resistance should be decreased with increase of its temperature.
2) Check resistance between sensor terminal (2) and sensor unit (1) as shown. If check result is not as specified, replace sensor.

ECT sensor specification
Temperature : 50 °C (122 °F)
Resistance : 136 – 216 Ω

Oil Pressure Warning Light

Oil pressure switch

INSPECTION

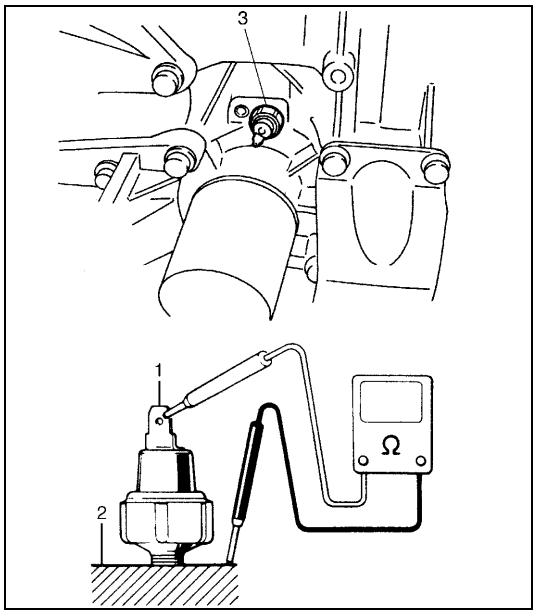

Use an ohmmeter to check switch continuity.

Oil pressure switch specification
During Engine Running : No continuity (∞ Ω)
At Engine Stop : Continuity (0 Ω)

1.	To wiring harness
2.	Cylinder block
3.	Oil pressure switch

REMOVAL AND INSTALLATION

Refer to “Oil Pressure Check” in Section 6A1.

Brake and Parking Brake Warning Light

Brake fluid level switch

INSPECTION

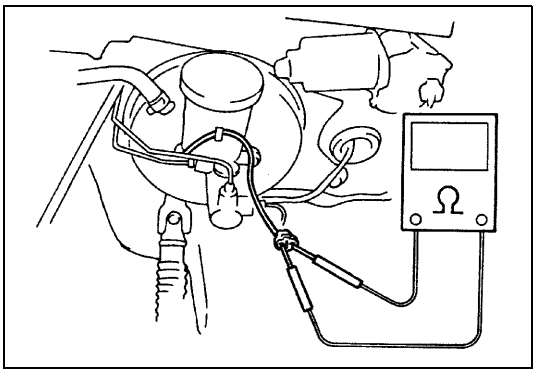

Use an ohmmeter to check switch for continuity.
If found defective, replace switch.

Brake fluid level switch specification
OFF position (float up) : No continuity
ON position (float down) : Continuity

Parking brake switch

INSPECTION

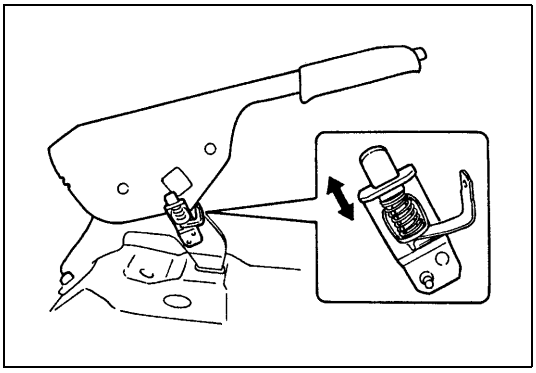

Use an ohmmeter to check switch for continuity.
If found defective, replace switch.

Parking brake switch specification
OFF position (parking brake released) : No continuity
ON position (parking brake lever pulled up) : Continuity

Seat Belt Warning Light (If Equipped)

Seat belt switch

INSPECTION

Refer to “Front Seat Belt without Pretensioner” in Section 10A for inspection.

Rear Window Defogger

Defogger switch

INSPECTION

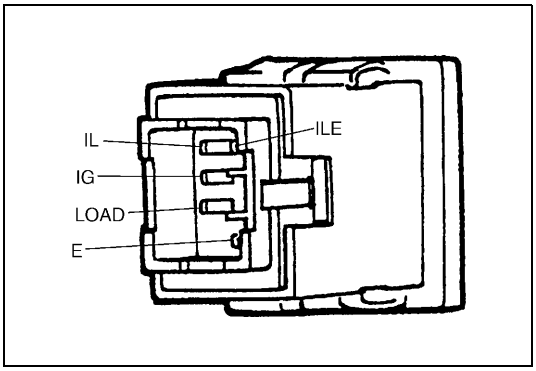

Use a circuit tester to check defogger switch for continuity.
If switch has no continuity between terminals, replace.

Terminal / Defogger SW	IG	E	LOAD	IL	ILE
OFF		○—○		○—○	
ON	○—○		○—○		○—○

Defogger wire

INSPECTION

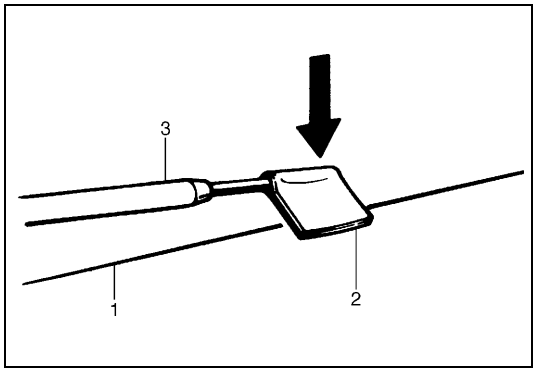

NOTE:

- **When cleaning rear window glass, use a dry cloth to wipe it along heat wire (1) direction.**
- **When cleaning glass, do not use detergent or abrasive-containing glass cleaner.**
- **When measuring wire voltage, use a tester with negative probe (3) wrapped with a tin foil (2) which should be held down on wire by finger pressure.**

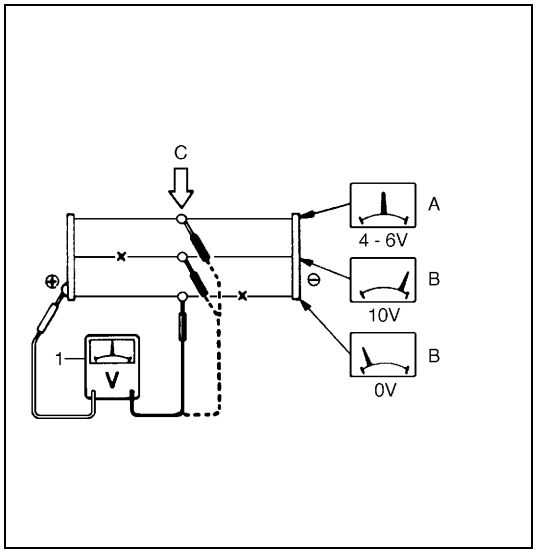

1) Check defogger wire damage as follows.
   a) Turn main switch ON.
   b) Turn defogger switch ON.
   c) Use a voltmeter (1) to check voltage at the center of each heat wire, as shown.
   If measured voltage is 10 V, wire must be damaged between its center and positive end. If voltage is zero, wire must be damaged between its center and ground.

Voltage	Criteria
Approx. 5 V	Good (No break in wire)
Approx. 10 V or 0 V	Broken wire

A.	Good
B.	Broken wire
C.	At center

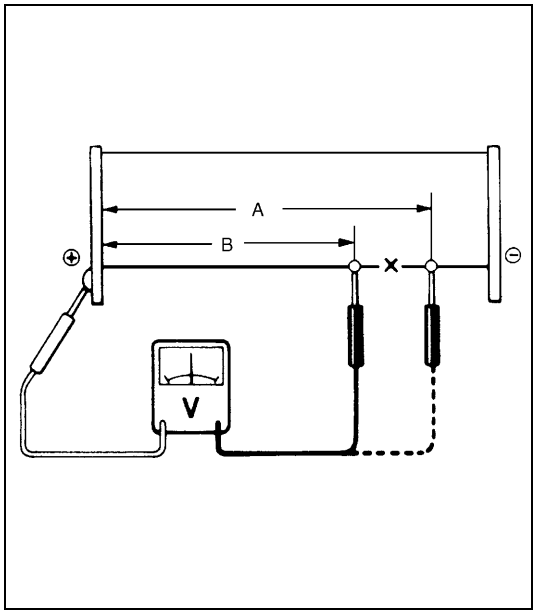

2) Locate damage in defogger wire as follows.
   a) Touch voltmeter positive (+) lead to heat wire positive terminal end.
   b) Touch voltmeter negative (–) lead with a foil strip to heat wire positive terminal end, then move it along wire to the negative terminal end.
   c) The place where voltmeter fluctuates from zero to several volts is where there is damage.

NOTE:

If heat wire is free from damage, voltmeter should indicate 12 V at heat wire positive terminal end and its indication should decrease gradually toward zero at the other terminal (ground).

A.	Several volts
B.	0 volt

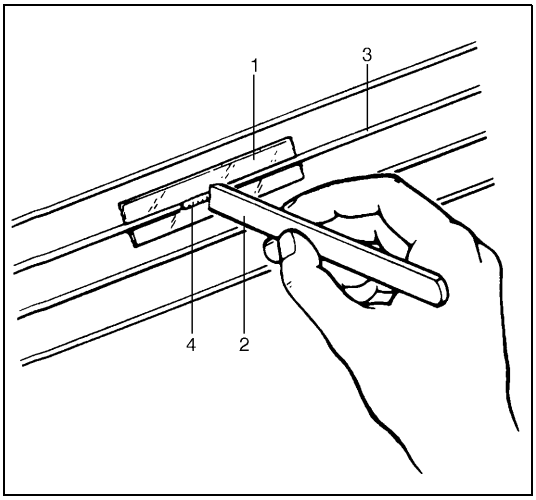

REPAIR

1) Use white gasoline for cleaning.
2) Apply masking tape (1) at both upper and lower sides of heat wire to be repaired.
3) Apply commercially-available repair agent (4) with a fine-tip brush.
4) Two to three minutes later, remove masking tapes previously applied.
5) Leave repaired heat wire as it is for at least 24 hours before operating defogger again.

2.	Wood spatula
3.	Broken wire

Wiper and Washer

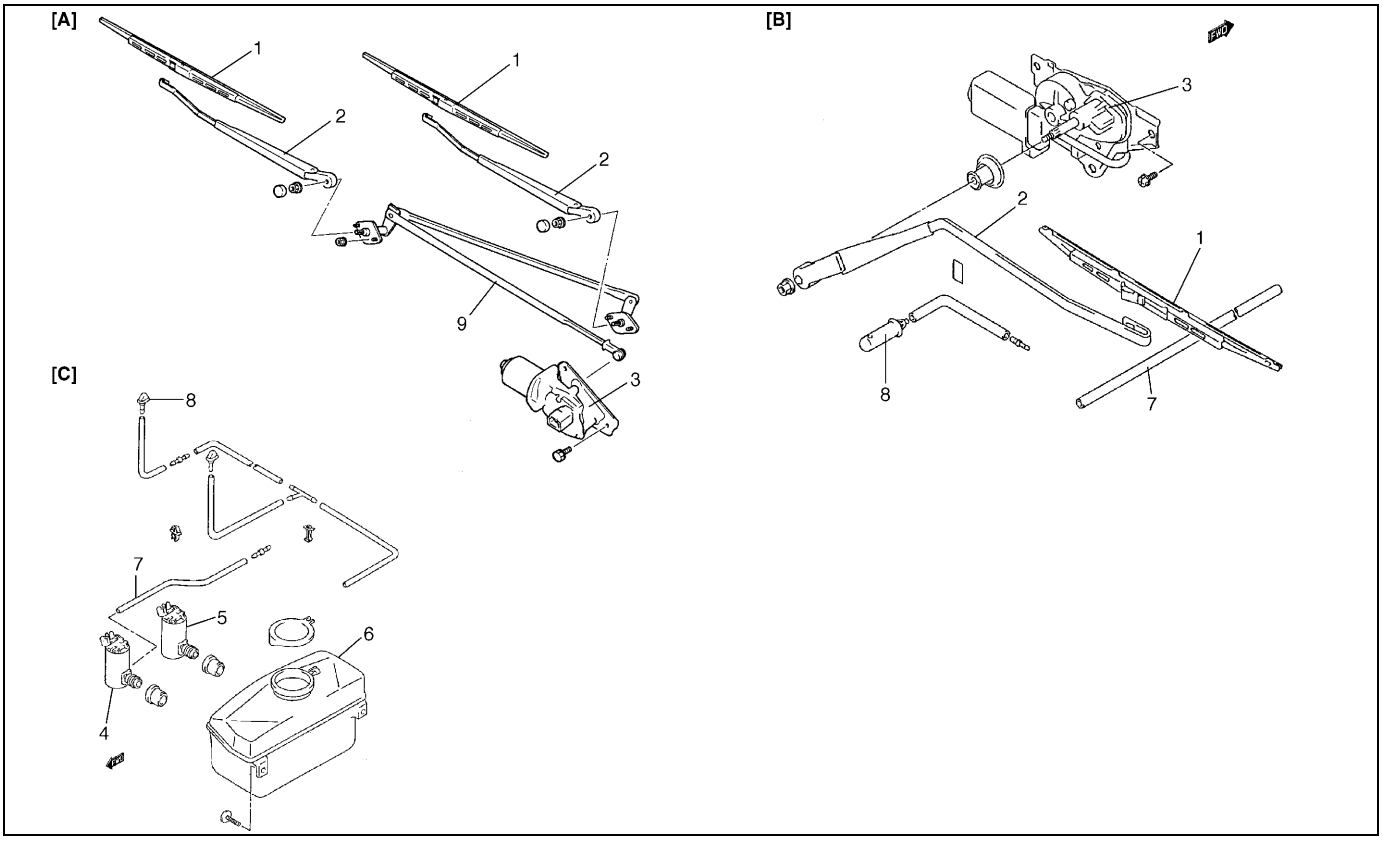

[A] : Front wiper	1. Wiper blade	4. Front washer pump	7. Washer hose
[B] : Rear wiper	2. Wiper arm	5. Rear washer pump	8. Washer nozzle
[C] : Washer	3. Wiper motor	6. Washer tank	9. Wiper link

Front wiper/washer switch

INSPECTION

1) Disconnect negative cable at battery.
2) Disconnect combination switch lead wire coupler.
3) Use a circuit tester to check the continuity at each switch position as shown below.

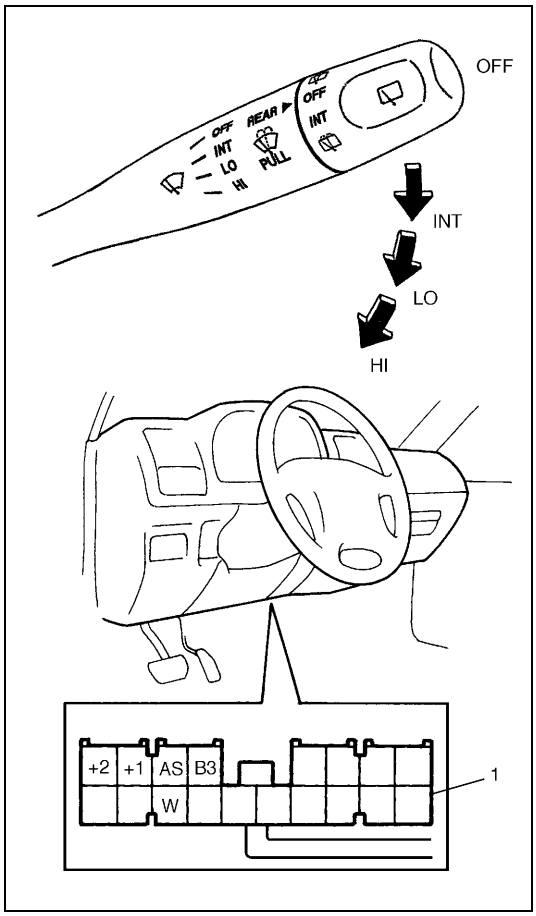

Wiper SW \ Terminal / Wire Color	B3	+2	+1	As
	Y/Bl	Bl/R	Bl	Bl/W
OFF			○	○
INT			○	○
LO	○	○	○	
HI	○	○		

Washer SW \ Terminal / Wire Color	B3	W
	Y/Bl	Bl/B
OFF		
ON	○	○

REMOVAL AND INSTALLATION

Refer to “Combination Switch/Contact Coil and Combination Switch Assembly” in Section 3C for details.

1. Combination switch lead wire coupler terminal viewed from terminal side

Intermittent Wiper Relay Circuit

1) Disconnect negative cable at battery.
2) Disconnect combination switch lead wire coupler.

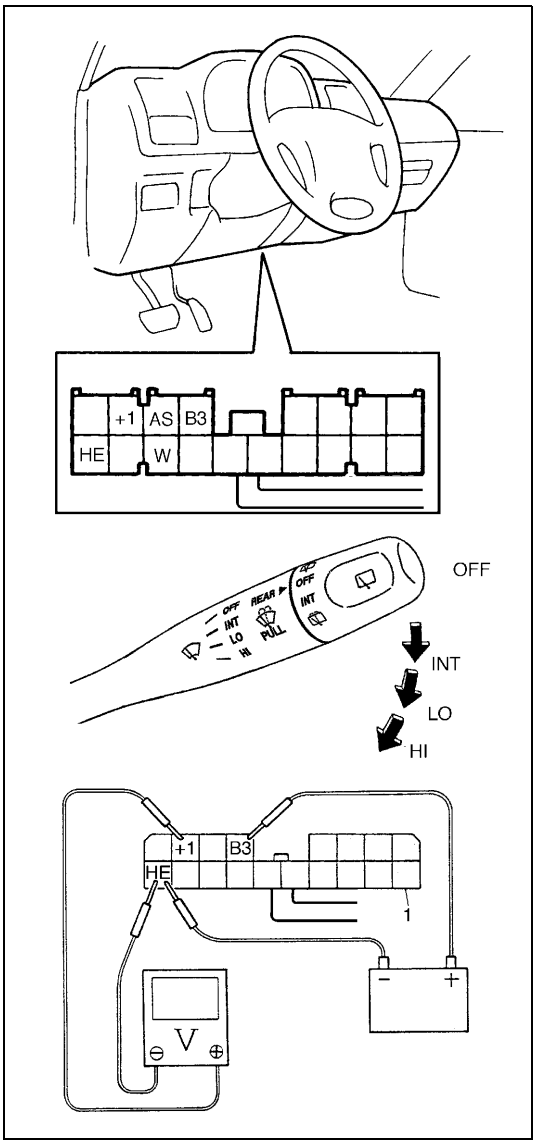

3) Turn the front wiper switch to INT position.
4) Connect battery positive terminal to terminal “B3” and battery negative terminal to terminal “HE”.
5) Connect voltmeter positive lead to terminal “+1” and negative lead to terminal “HE”.
   Check that the voltmeter indicates the battery voltage (10 – 14 V).

1. Combination switch lead wire coupler terminal viewed from terminal side

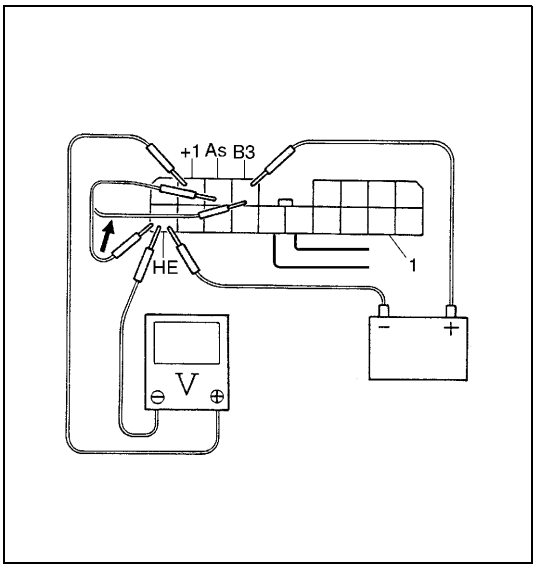

6) Connect terminal “As” and terminal “B3” by a jumper wire. Then connect terminal “B3” end to terminal “HE”.
   Observe the voltmeter voltage drops to 0 V right after connecting the jumper wire from terminal “B3” to “HE”. Then the voltage rises to battery voltage (10 – 14 V) within the time shown below.

1. Combination switch lead wire coupler terminal viewed from terminal side

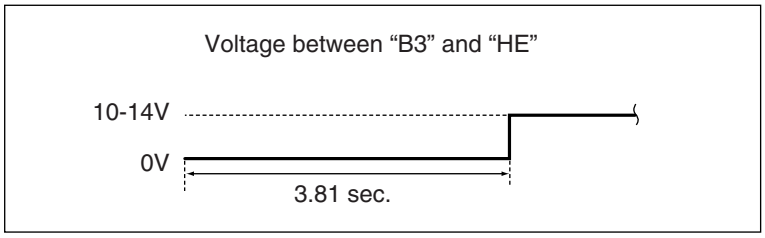

Washer Linked Operation

1) Disconnect negative cable at battery.
2) Disconnect combination switch lead wire coupler.
3) Make sure that front wiper switch is at OFF position.
4) Connect battery positive terminal to terminal “B3” and battery negative terminal to terminal “HE”.
5) Connect voltmeter positive lead to terminal “+1” and negative lead to terminal “HE”.
6) Push washer switch check that voltage changes as shown in the table.

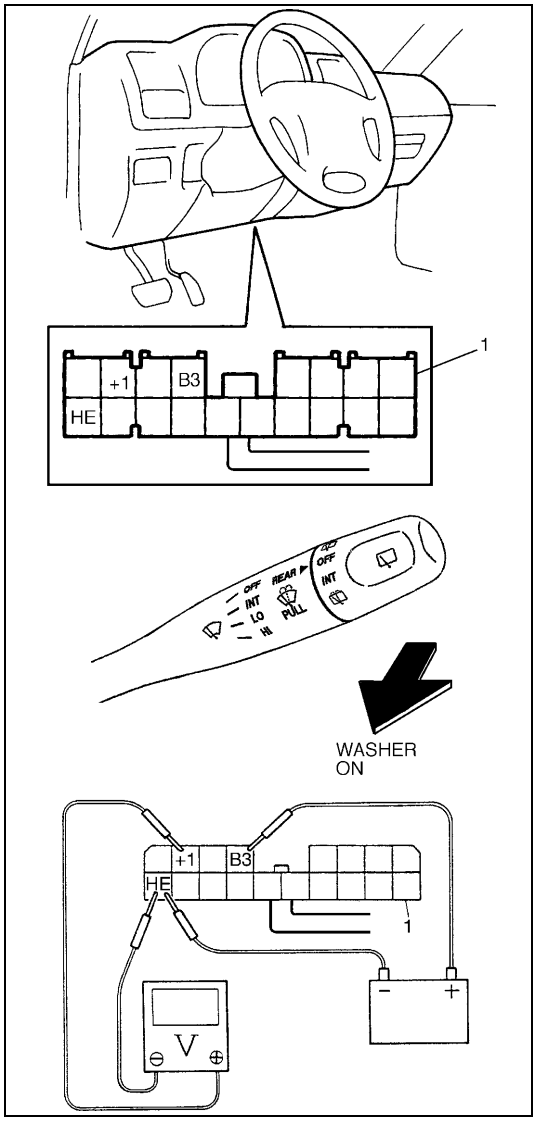

1. Combination switch lead wire coupler terminal viewed from terminal side

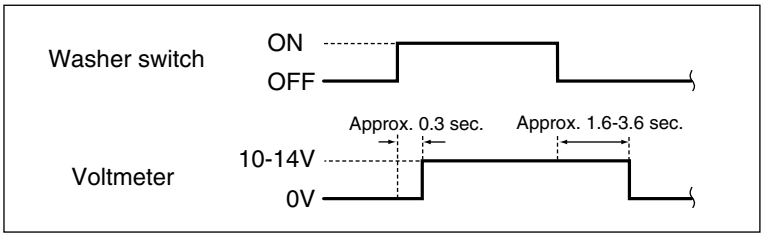

Wiper motor

INSPECTION

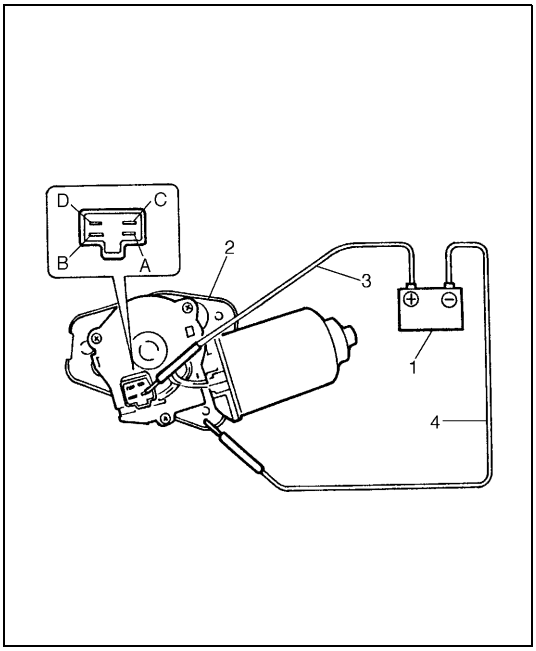

Motor operation (low speed)

1) Connect battery (1) positive (+) terminal to terminal “A” and its negative (–) terminal to bracket.
2) Check wiper motor rotates at specified speed below.
   If check result is out of specification, replace.

Specification: 44 – 52 r/min (rpm)

Motor operation (high speed)

1) Connect battery positive (+) terminal to terminal “B” and its negative (–) terminal to bracket.
2) Check wiper motor rotates at specified speed below.
   If check result is out of specification, replace.

Specification: 64 – 78 r/min (rpm)

2.	Wiper motor
3.	“+” -Red lead
4.	“–” -Black lead

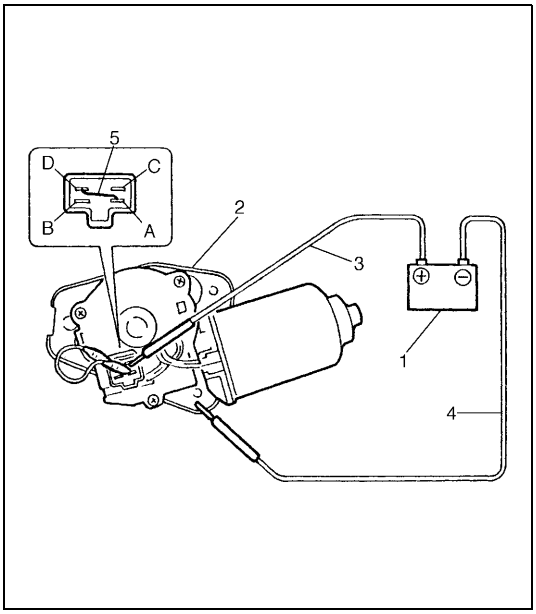

Automatic stop operation

1) Connect battery (1) positive (+) terminal to terminal “A” and its negative (–) terminal to bracket and let the motor turn.
2) Disconnect terminal “A” from battery positive (+) terminal, and let the motor stop.
3) Connect terminal “A” and “D” with a jumper wire (5), and connect terminal “C” to battery positive (+) terminal. Observe the motor turns once again then stops at a original stop position.
4) Repeat Step 1) to 3) several times and check that the motor stops at the original stop position every time.
   If check result is not satisfied, replace.

2.	Wiper motor
3.	“+” -Red lead
4.	“–” -Black lead

Washer pump

REMOVAL

1) Disconnect battery (–) cable.
2) Remove washer tank fitting screws.
3) Disconnect pump lead wire coupler(s) and hose(s).
4) Remove washer tank (3).
5) Remove pump from tank.

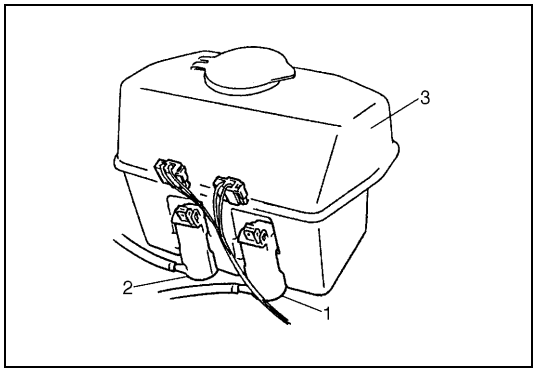

1.	Front washer pump
2.	Rear washer pump

INSPECTION

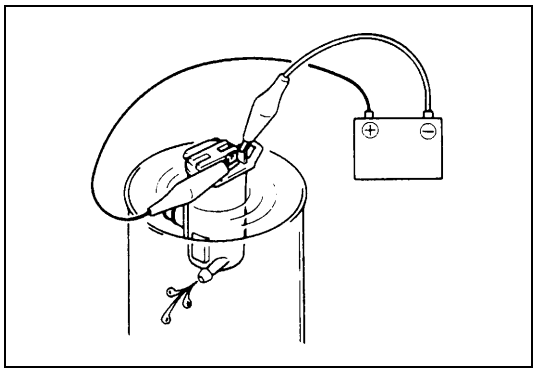

Connect battery (+) and (–) terminals to pump (+) and (–) terminals respectively to check pumping rate.
Check for both front and rear washer pump.

Pumping Rate
Front washer pump
: more than 1.0 l/min (2.1 US pt./min, 1.76 Imp pt./min)
Rear washer pump
: more than 1.0 l/min (2.1 US pt./min, 1.76 Imp pt./min)

INSPECTION

Reverse removal procedure for installation.

Rear Wiper and Washer

Wiper and washer switch

INSPECTION

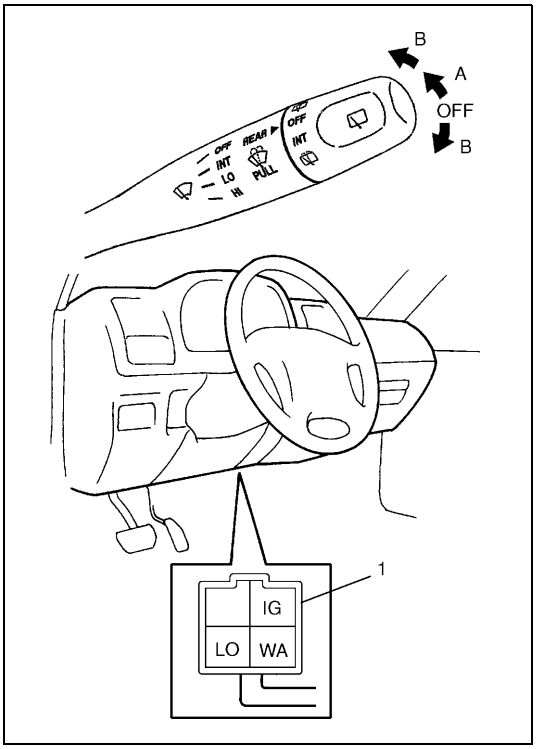

Check for continuity between terminals at each switch position.

Terminal / Wire Color / Position	IG	LO	WA
	B	W	Bl
OFF			
WIPER INT (A)	○——	——○	
WIPER and WASHER ON (B)	○——	——○——	——○

1. Combination switch lead wire coupler viewed from terminal side

Rear wiper motor

INSPECTION

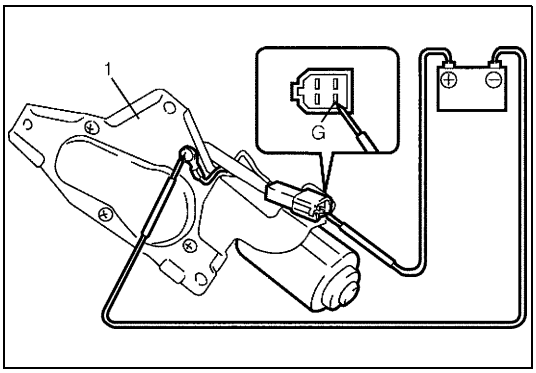

Motor operation

1) Use a 12 V battery positive (+) terminal to terminal “G” and it negative (–) terminal to wiper bracket (1).
2) Check wiper motor rotates at specified speed below.
   If check result is out of specification, replace.

Specification : 35 – 45 r/min (rpm)

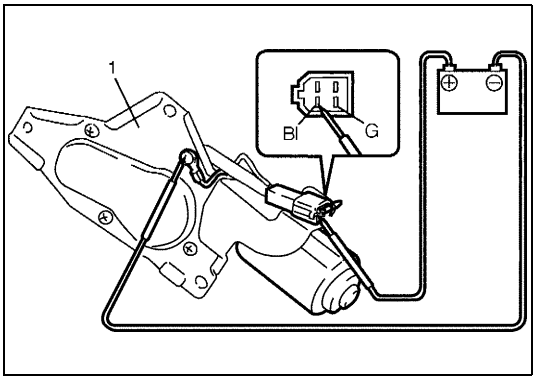

Automatic stop operation

1) Connect battery positive (+) terminal to terminal “G” and battery (–) terminal to wiper bracket (1) and let the motor turn.
2) Disconnect terminal “G” from battery and let the motor stop.
3) Connect terminal “Bl” to battery positive (+) terminal. Observe the wiper motor turns once again, then stops at a original stop position.
4) Repeat Step 1) to 3) several times, and inspect if the motor stops at the original stop condition every time.
   If check result is not satisfied, replace.

Rear wiper intermittent relay

INSPECTION

1) Disconnect negative (–) cable from battery.

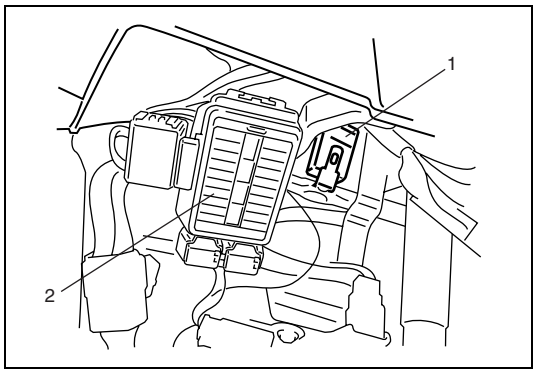

2) Remove rear wiper intermittent relay (1) from vehicle.

2. Circuit fuse box

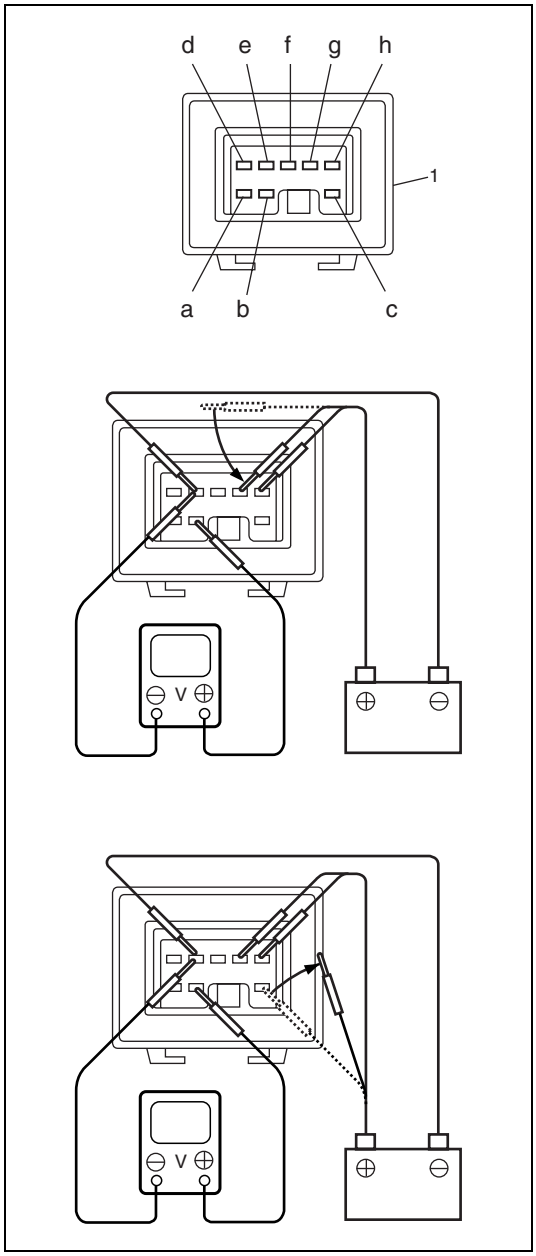

3) Check INT circuit as follows.
   a) Connect battery positive (+) terminal to “h” terminal and battery negative (–) terminal to “e” terminal.
   b) Check that voltage between “b” terminal and “e” terminal changes from 0 V to battery voltage when connecting battery positive (+) terminal to “g” terminal.
      If check result is not satisfied, replace relay.
   c) Connect battery positive (+) terminal to “c” terminal.
   d) Check that voltage between “b” terminal.
      If check result is not satisfied, replace relay.

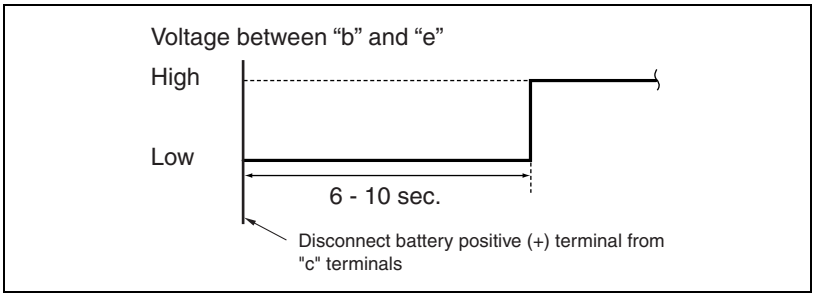

1. Rear wiper intermittent relay

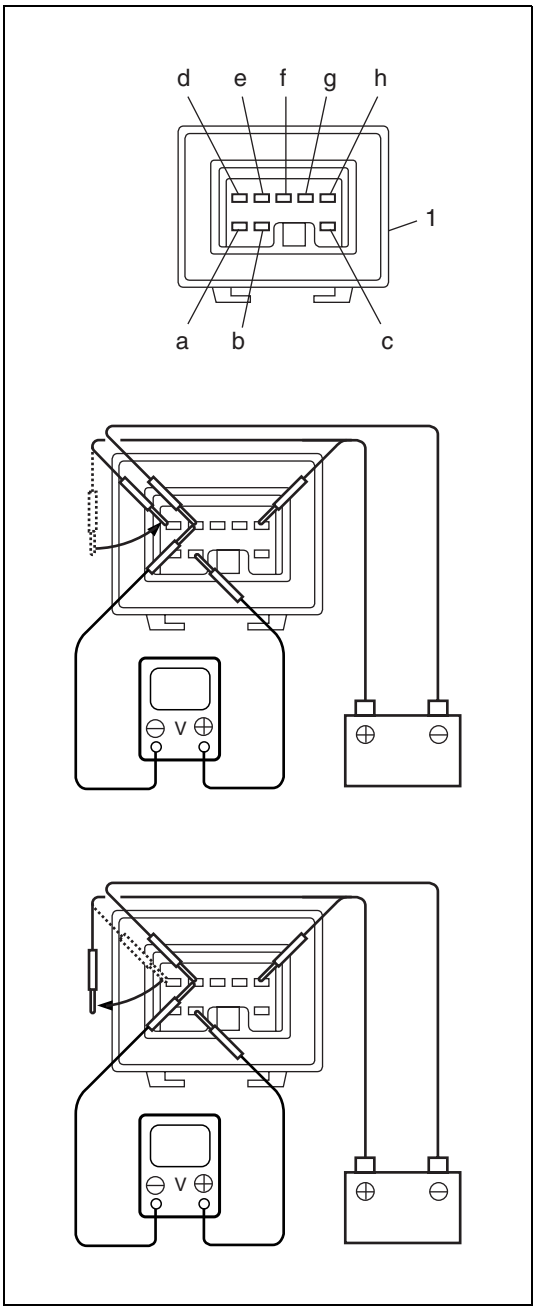

4) Check WIPER AND WASH circuit as follows.
   a) Connect battery positive (+) terminal to “h” terminal and battery negative (–) terminal to “e” terminal.
   b) Check that voltage between “b” terminal and “e” terminal changes as below figure when connecting battery positive (+) terminal from “d”.
      If check result is not satisfied, replace relay.

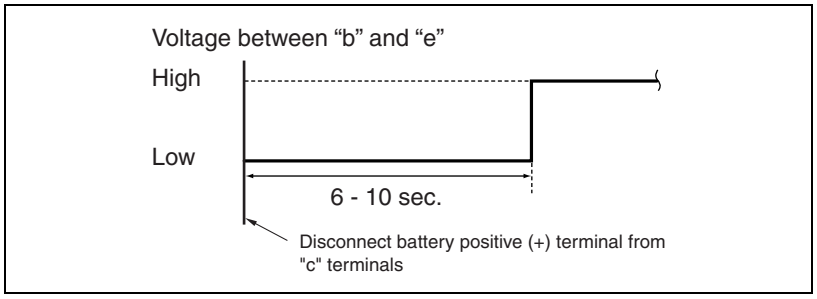

   c) Check that voltage between “b” terminal and “e” terminal changes as below figure when disconnecting battery positive (+) terminal from “d”.
      If check result is not satisfied, replace relay.

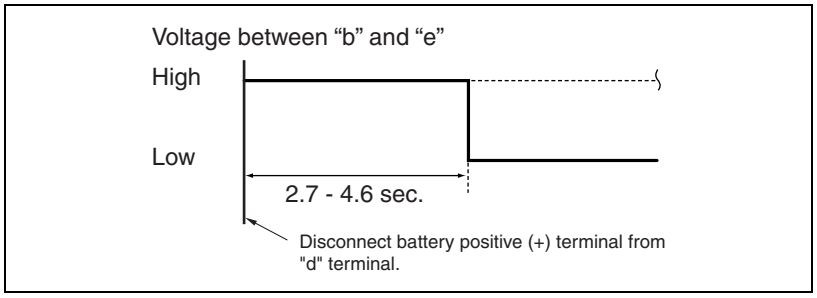

1. Rear wiper intermittent relay

Power Window Control System (If Equipped)

Breaker

INSPECTION

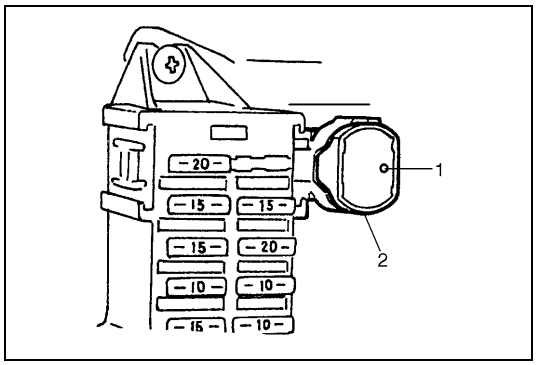

- When the breaker (2) has worked, insert a pin in the hole (1) indicated in the figure and push it until a click is heard.
  If the system fails to operate properly, replace the breaker.

Power window main switch

INSPECTION

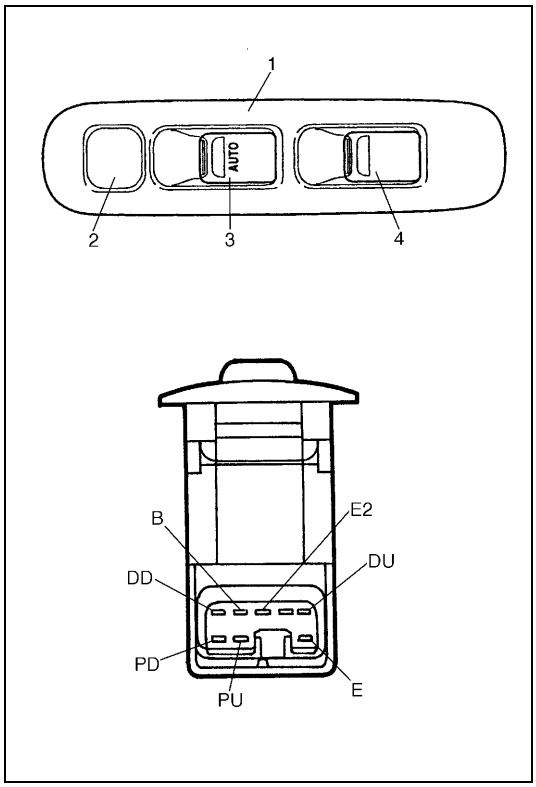

Inspect switch continuity between terminals.

Switch Position \ Terminal			Driver Side Window Switch				Passeger Side Window Switch			
			B	E	DU	DD	B	E	PU	PD
Window Lock Switch	OFF	UP	○	○	○	○	○	○	○	○
		OFF		○ ○	○	○		○ ○	○	○
		DOWN	○	○	○	○	○	○	○	○
	ON	UP	○	○	○	○	○		○	
		OFF		○ ○	○	○			○	○
		DOWN	○	○	○	○	○			○

1.	Power window main switch
2.	Power window lock switch
3.	Driver side window switch
4.	Passenger side window switch

Power window sub switch

INSPECTION

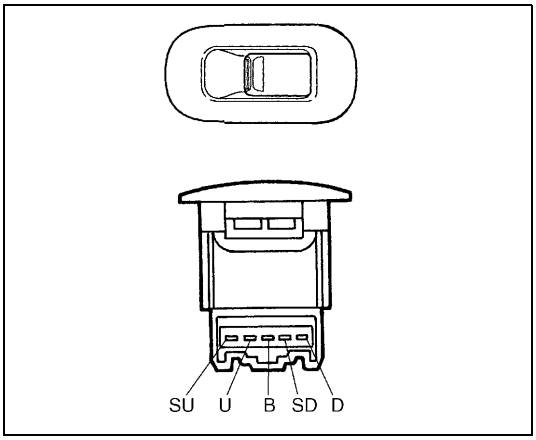

Inspect switch continuity between terminal.

Switch Position \ Terminal	B	SD	SU	D	U
UP	○	○		○	○
OFF		○	○	○	○
DOWN	○		○	○	○

Power Door Lock System (If Equipped)

Power door lock system component location

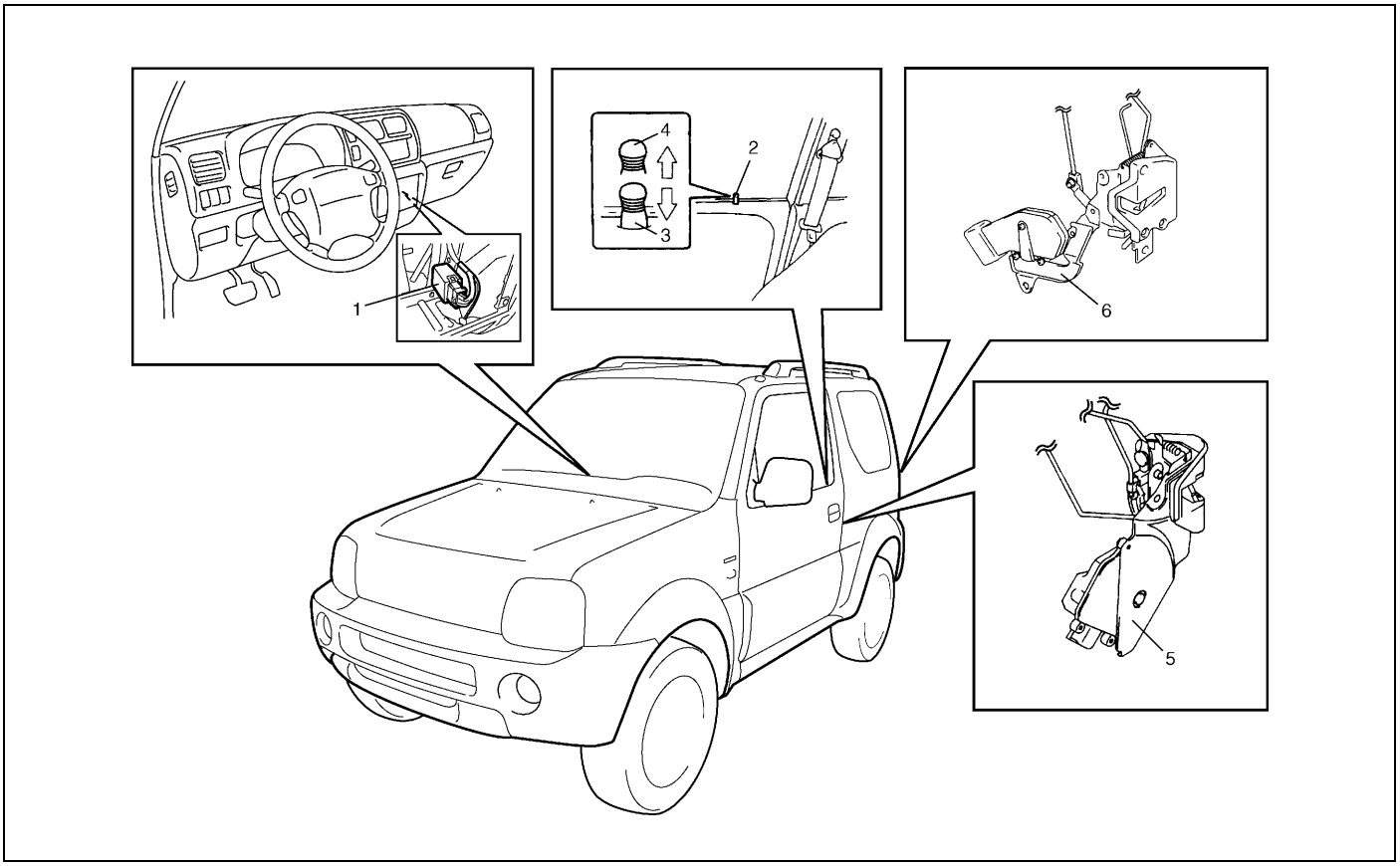

1. Power door lock controller	3. LOCK position	5. Front door actuator
2. Driver side door knob switch	4. UNLOCK position	6. Back door actuator

Power door lock system operation inspection

1) Check the following operation:
   a) When the driver side key cylinder is turned LOCK, check all doors lock.
   b) When the driver side door key cylinder is turned UNLOCK, check all doors unlock.

If check result is not satisfied, go to “Power Door Lock System Circuit Inspection” in this section.

Power door lock system circuit inspection

1) Disconnect negative cable from battery.

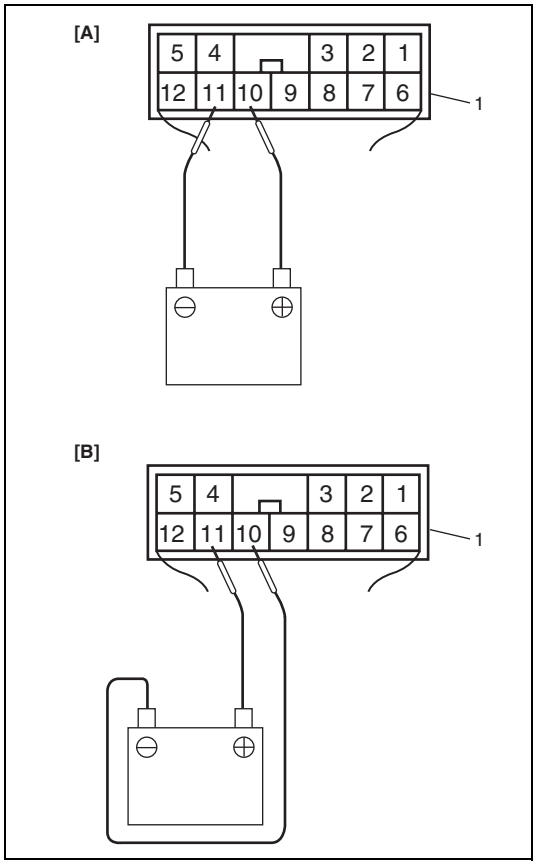

2) Disconnect door lock controller coupler (1).
3) Confirm that all doors are unlocked. Connect battery positive (+) and negative (–) terminals to door lock controller coupler terminals and check power door lock operation as follows.
   If it does not operate as specified, repair applicable circuit or check actuator. If it operates as specified, go to next step.

Power door lock operation for vehicle:

Step	TERMINAL		OPERATION
	G10-10	G10-11	
1	⊕	⊖	UNLOCK ⟶ LOCK
2	⊖	⊕	LOCK ⟶ UNLOCK

[A] : Step 1: Lock operation check
[B] : Step 2: Unlock operation check

1. Power door lock controller coupler “G10” viewed from harness side

4) Connect negative (–) cable to battery.

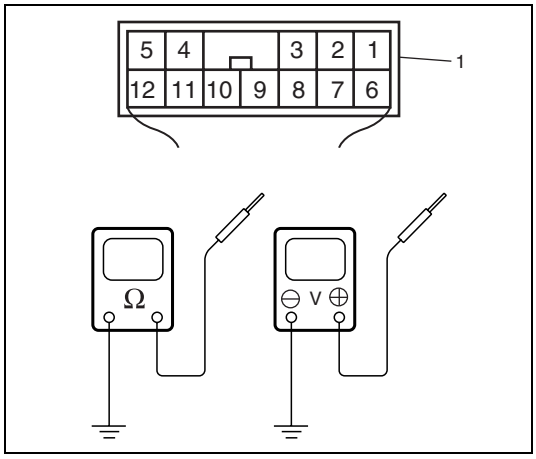

5) Check that the voltage and continuity between the following terminals and body ground are specifications under each conditions.
   If check result is not as specified, repair circuit.
   If check result is OK, recheck power door lock system as follows.
   a) Substitute a known-good door lock controller.
   b) Recheck power door lock system circuit.

1 : Power door lock controller coupler “G10” viewed from harness side

Power door lock system circuit check

Terminal	Wire	Circuit	Specification	Condition
G10-7	WHT/GRN	Main power supply	10 – 14 V	–
G10-8	BLU/RED	Driver side door knob switch lock signal circuit	Continuity	Driver side door knob switch is lock position.
			No continuity	Driver side door knob switch is unlock position.
G10-9	BRN/YEL	Driver side door knob switch unlock signal circuit	Continuity	Driver side door knob switch is unlock position.
			No continuity	Driver side door knob switch is lock position.
G10-12	BLK	Ground	0 – 1 V	–

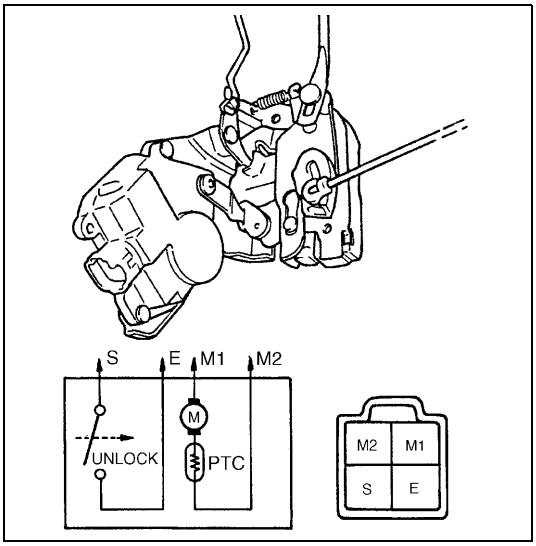

Driver side key cylinder switch

INSPECTION

Inspect continuity at terminals according to the key action.

Key \ Terminal	S	E
LOCK		
UNLOCK	○	○

Power door lock actuator

INSPECTION

1) Disconnect power door lock actuator coupler.
2) Connect 12 V battery positive and negative terminals to the door lock actuator terminals shown below.
   If it does not follow the table's operation, replace the faulty door lock actuator.

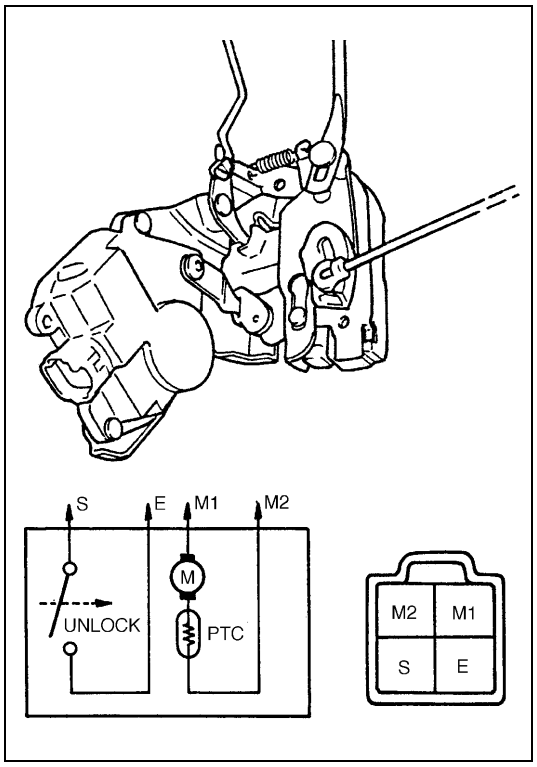

Front Door

Operation / Terminal	UNLOCK		LOCK	
	R	L	R	L
M1	⊕	⊖	⊖	⊕
M2	⊖	⊕	⊕	⊖

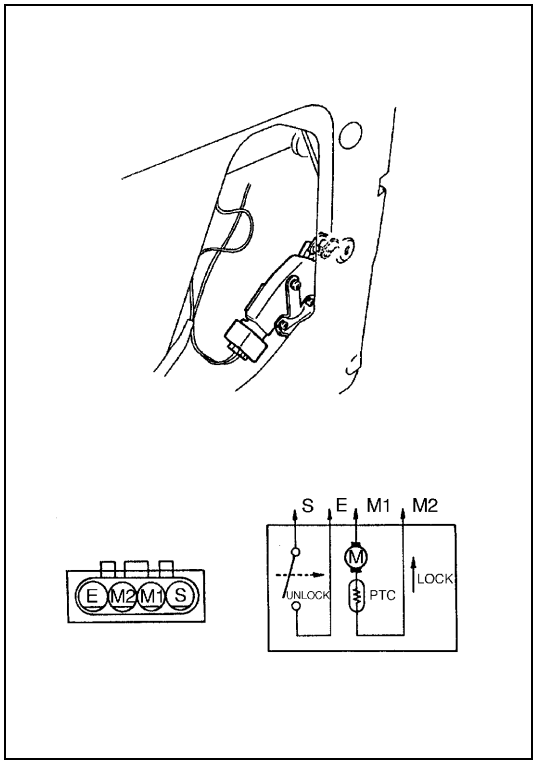

Back Door

Operation / Terminal	UNLOCK	LOCK
M1	⊖	⊕
M2	⊕	⊖

Power Door Lock System with Keyless Entry System (If Equipped)

Power door lock system with keyless entry system component location

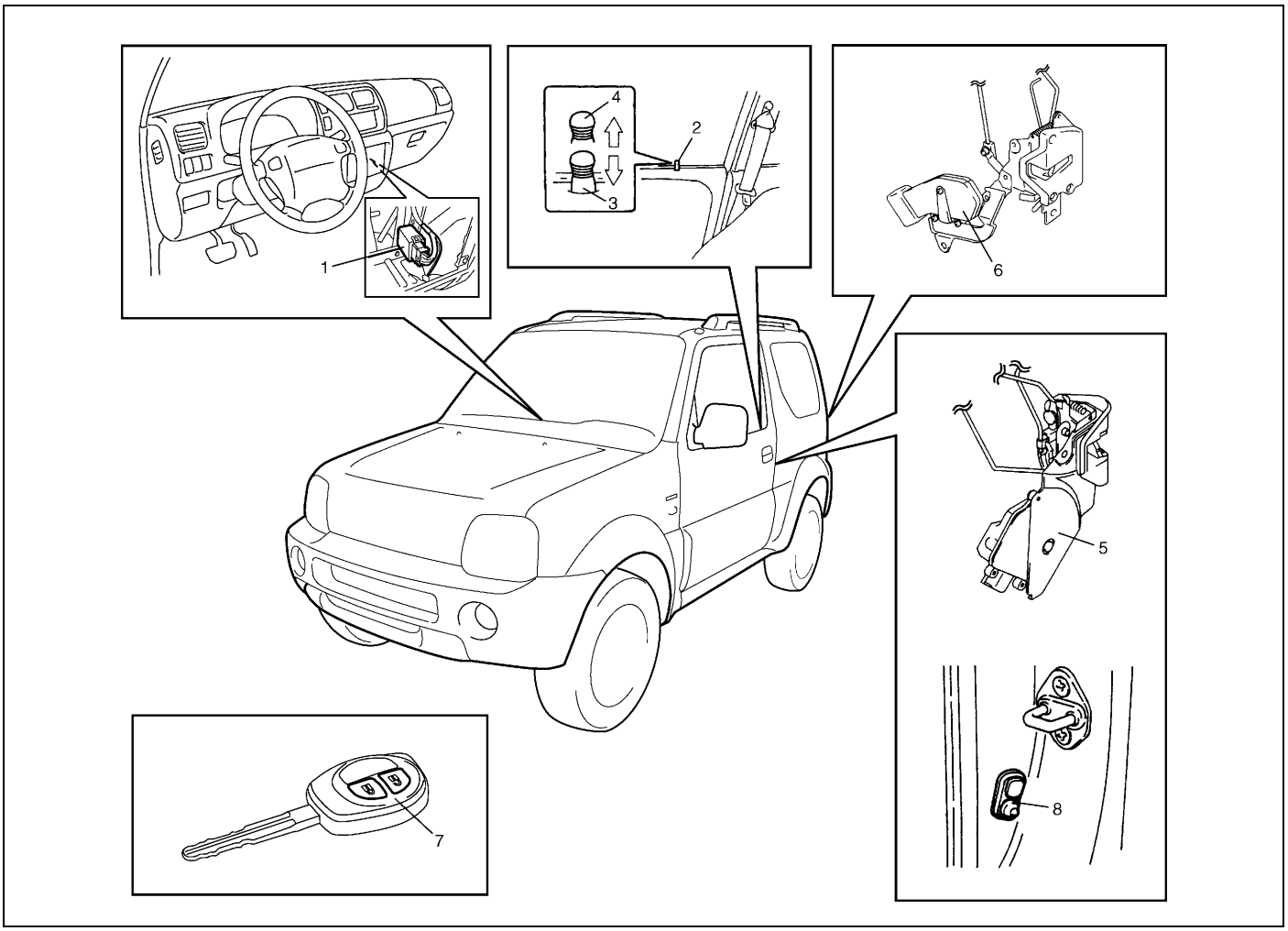

1. Power door lock controller	4. UNLOCK position	7. Transmitter
2. Driver side door knob switch	5. Front door actuator	8. Door switch
3. LOCK position	6. Back door actuator	

System Description

The keyless entry system has the following signal modes in order to feed back the signal when the controller received LOCK and UNLOCK signals from transmitter.

Received signal / Signal mode	LOCK signal	UNLOCK signal
Hazard warning light signal mode	The hazard warning lights flash once.	The hazard warning lights flash twice and the interior light turns on about 15 seconds.
Interior light signal mode	The interior light flashes twice.	The interior light turns on about 15 seconds.

NOTE:

- **These signal modes are able to change referring to “Change of Signal Mode” in this section.**
- **The initial condition is the hazard warning light signal mode.**

Change of signal mode

1) Confirm that all doors are closed and ignition key is out of ignition switch.
2) Perform the following procedures within 15 seconds.
   a) Insert ignition key to ignition switch and pull out ignition key from ignition switch.
   b) Repeat step a) two times.
   c) Insert ignition key to ignition switch, and then push “LOCK” button on transmitter more than five times.
3) Confirm that hazard warning light or interior light flash once. With this, change of signal mode is completed.

Keyless entry system operation inspection

NOTE:

If keyless entry system is in interior light signal mode, change to hazard warning light signal mode referring to “Change of Signal Mode” in this section.

1) Confirm that power door lock system is good condition referring to “Power Door Lock System Operation Inspection” in this section.
2) Confirm that turn signal and hazard warning light system is good condition referring to “Turn Signal and Hazard Warning Light System” in this section.
3) Check transmitter battery for dead. If battery is dead, replace battery referring to “Replacement of Transmitter Battery” under “Transmitter” in this section.
4) Confirm that all doors are closed and unlocked.

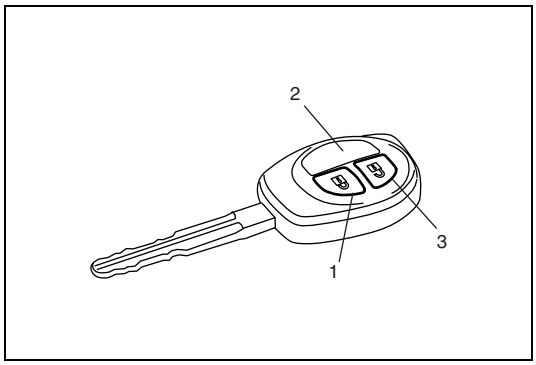

5) Check the following operation:
   a) When pushing “LOCK” button (1) on transmitter (2), check all doors lock and hazard warning lights flash once.
   b) When pushing “UNLOCK” button (3) on transmitter (2), check all doors unlock and hazard warning lights flash twice and interior light turn on about 15 seconds with the interior light switch in the middle position.

If check result is not satisfied, go to “Keyless Entry System Circuit Inspection” in this section.

Keyless entry system circuit inspection

NOTE:

If keyless entry system is in interior light signal mode, change to hazard warning light signal mode referring to "Change of Signal Mode" in this section.

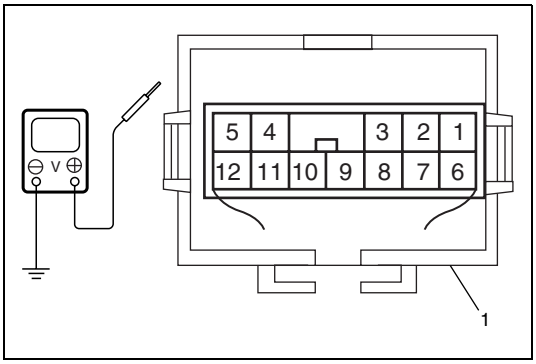

Check that the voltage and continuity between the following terminals and body ground are specifications under each conditions.
If check result is not as specified, check applicable circuit.
If circuit is normal, recheck keyless entry system circuit as follows.

1) Substitute a known-good door lock controller.
2) Register key code referring to "Code Registration Procedure" under "Transmitter" in this section.
3) Recheck keyless entry system circuit.

1. Door lock controller

Keyless entry system circuit check

Terminal	Wire	Circuit	Specification	Condition
G10-2	BLU/GRN	Key remainder circuit	10 – 14 V	Ignition key is in ignition switch.
			0 – 1 V	Ignition key is not in ignition.
G10-4	BLK/RED	Door switch & interior light circuit	0 – 1 V	Driver side, passenger side, rear driver side, rear passenger side or back door is open.
			10 – 14 V	All doors are close.
			Figure "A"	Fulfill the following conditions. • All door is close. • Interior light switch is middle position. • 15 seconds after pushing "UNLOCK" button on transmitter.
G10-5	YEL/BLU	Hazard warning signal circuit	Figure "B"	Push "LOCK" button on transmitter.
			Figure "C"	Push "UNLOCK" button on transmitter.

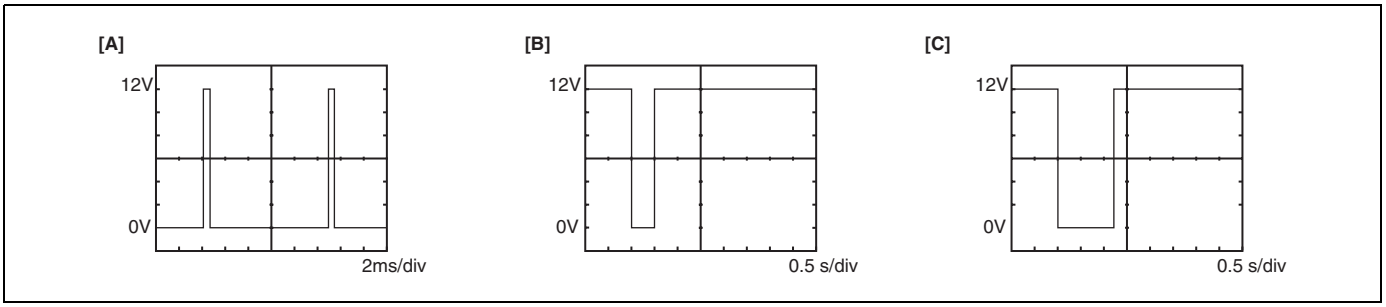

[A] :	Figure "A"
[B] :	Figure "B"
[C] :	Figure "C"

Transmitter

REPLACEMENT OF TRANSMITTER BATTERY

If transmitter becomes unreliable, replace transmitter battery as follows.

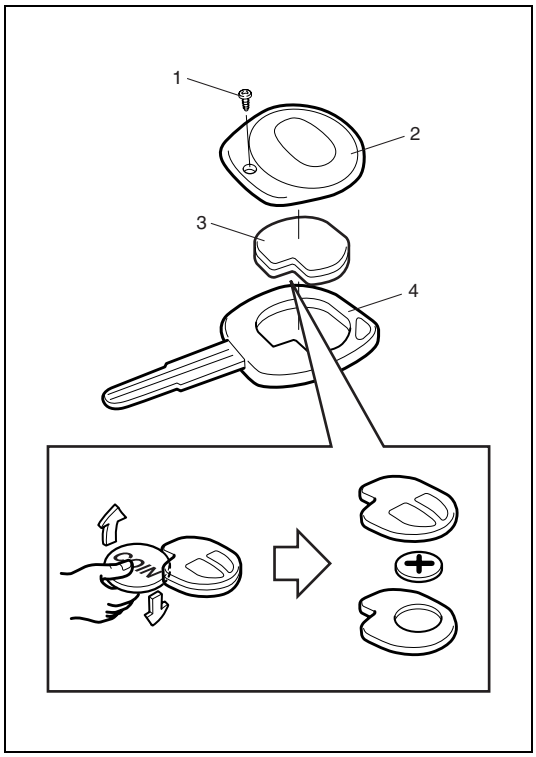

1) Remove screw (1) and transmitter cover (2).
2) Remove transmitter (3) from transmitter holder (4).
3) Put edge of coin or flat blade screwdriver in slot of transmitter (3) and by pry it open.
4) Replace the battery (lithium disc-type CR1616 or equivalent battery) so its + terminal faces "+" mark on transmitter.
5) Fit together transmitter (3) and install it into transmitter holder (4).
6) Install transmitter cover (2) and screw (1).
7) Make sure the door locks can be operated with transmitter.

CAUTION:

Use care not to allow grease or dirt to be attached on the printed circuit board and the battery.

NOTE:

- **To prevent theft, be sure to break the transmitter before discarding it.**
- **Dispose of the used battery properly according to applicable rules or regulations. Do not dispose of lithium batteries with ordinary household trash.**

CODE REGISTRATION PROCEDURE

If transmitter or door lock controller replace new one, register key code as follows.

1) Confirm that the vehicle is the following conditions.
   - All doors are closed.
   - Ignition key is out of ignition switch.
   - Driver side door is unlocked.
2) Disconnect negative (-) cable from battery.
3) After 30 seconds, perform the following procedure within 60 seconds.
   a) Connect negative (-) cable to battery.
   b) Operate driver side door knob switch from lock to unlock.
   c) Push "LOCK" button on transmitter and confirm that are operated from lock to unlock.
   d) Push driver side door knob switch to lock position.
   e) Push "LOCK" button on transmitter twice and confirm that all doors are operated from unlock to lock. With this, code registration is completed.

NOTE:

- **Two transmitter codes can be registered.**
- **When a new transmitter code is registered, the oldest one will be cleared.**

Driver side key cylinder switch

Refer to “Driver Side Key Cylinder Switch” under “Power Door Lock System (If Equipped)” in this section.

Power door lock actuator

Refer to “Power Door Lock Actuator” under “Power Door Lock System (If Equipped)” in this section.

Door switch

INSPECTION

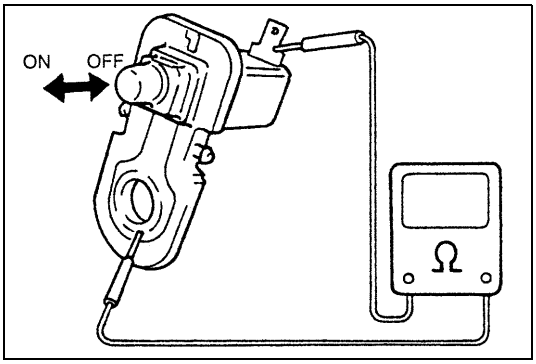

Remove door switch from body and check switch for continuity. if found defective, replace switch.

OFF position (Door closed)	No continuity
ON position (Door open)	Continuity

Power Door Mirror Control System (If Equipped)

Mirror switch

INSPECTION

1) Remove mirror switch from instrument panel.
2) Check continuity at each switch position by using a circuit test. If any continuity is not obtained, replace mirror switch.

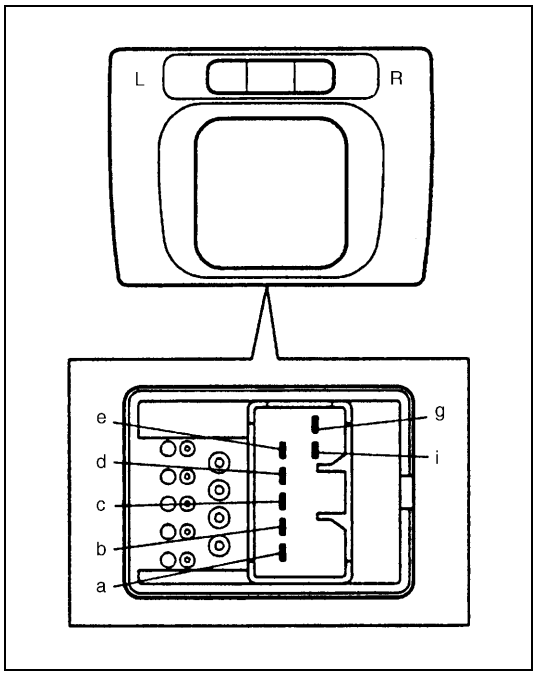

L / R	a	b	c	d / e	g / f
UP	○——	——○	○——	———	——○
DOWN	○——	——○	○——	———	——○
LEFT	○——	——○	○——	——○	———
RIGHT	○——	——○	○——	——○	———

Door mirror actuator

INSPECTION

1) Remove front door inner garnish from front door.
2) Disconnect door mirror coupler.
3) Check that door mirror operates properly when battery voltage is applied to connector terminals.
   Connect battery positive and negative terminal to the door mirror terminal shown below.
   If it does not follow the table's operation, replace door mirror assembly.

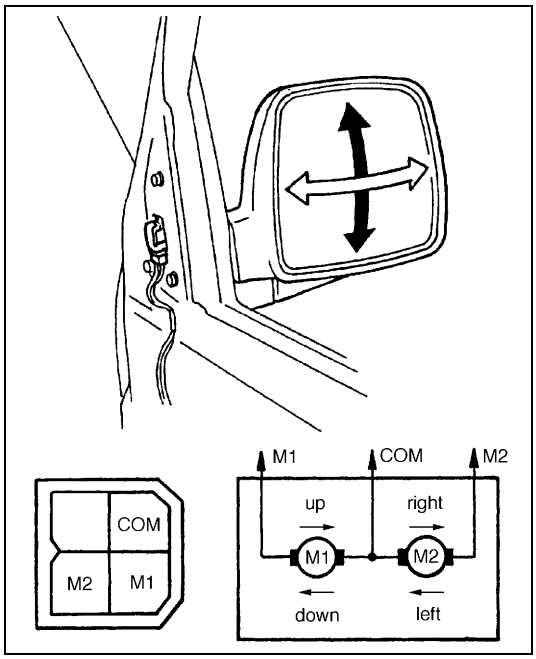

Terminal / Operation	COM	M1	M2
Up	⊖	⊕	
Down	⊕	⊖	
Left	⊖		⊕
Right	⊕		⊖

NOTE:

When installing door mirror to door, be careful not to pinch harness between door and door mirror.

Door Mirror Heater (If Equipped)

Mirror heater switch

INSPECTION

Door mirror heater is operated by rear defogger switch. Check rear defogger switch referring to “Rear Defogger Switch” in this section.

Mirror heater (if equipped)

INSPECTION

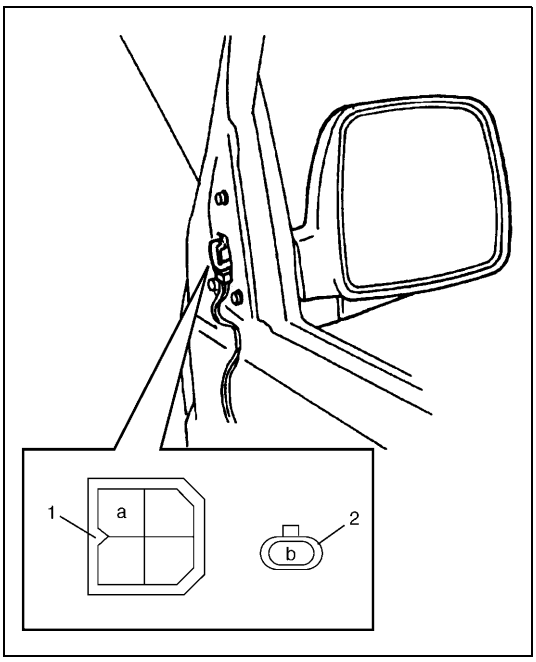

1) Remove door inner garnish from front door.
2) Disconnect door mirror coupler (1) and door mirror heater coupler (2).
3) Check for continuity between terminals “a” and “b”.
   if not continuity, replace outside mirror.

Front Seat Heater (If Equipped)

Seat heater switch (driver and passenger side)

INSPECTION

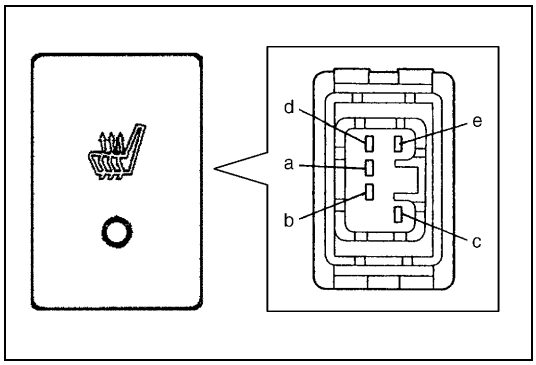

1) Remove seat heater switch from instrument panel.
2) Check for continuity between terminals at each switch position as show below. If check result is not as specified, replace switch.

Position \ Terminal	a	b	c	d	e
FREE					
PUSH					

Seat heater wire

INSPECTION

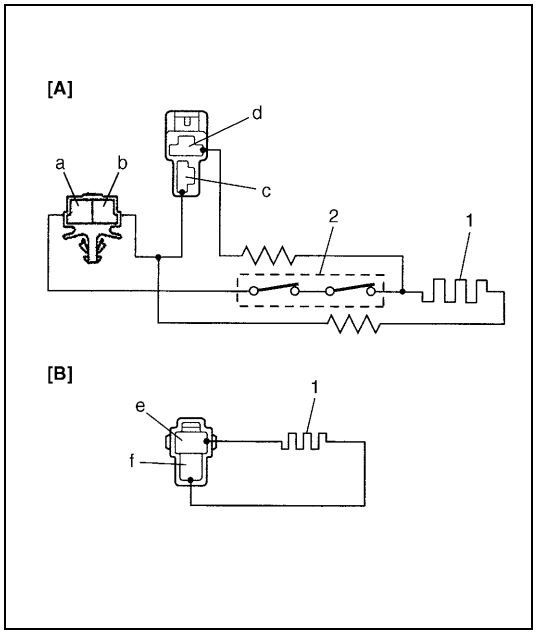

1) Confirm that seat heater switch is OFF position.
2) Disconnect two couplers of seat heater under the seat cushion.
3) Check for continuity between terminals as show below.
   If not continuity, replace faulty seat heater.

Seat heater circuit in seat back
Between “a” and “b”
Between “b” and “c”
Between “b” and “d”

Seat heater circuit in seat cushion
Between “e” and “f”

[A]:	Seat heater circuit in seat back
[B]:	Seat heater circuit in seat cushion
1.	Heater wire
2.	Thermostat

SECTION 8G

IMMOBILIZER CONTROL SYSTEM (IF EQUIPPED)

WARNING:

For vehicles equipped with Supplemental Restraint (Air Bag) System

- **Service on and around the air bag system components or wiring must be performed only by an authorized SUZUKI dealer. Refer to "Air Bag System Components and Wiring Location View" under "General Description" in air bag system section in order to confirm whether you are performing service on or near the air bag system components or wiring. Please observe all WARNINGS and "Service Precautions" under "On-Vehicle Service" in air bag system section before performing service on or around the air bag system components or wiring. Failure to follow WARNINGS could result in unintentional activation of the system or could render the system inoperative. Either of these two conditions may result in severe injury.**
- **Technical service work must be started at least 90 seconds after the ignition switch is turned to the "LOCK" position and the negative cable is disconnected from the battery. Otherwise, the system may be activated by reserve energy in the Sensing and Diagnostic Module (SDM).**

NOTE:

Whether the immobilizer indicator lamp is used in the particular vehicle or not depends on vehicle specifications. If there is an heated oxygen sensor (sensor 2) on exhaust pipe, the vehicle is equipped with immobilizer indicator lamp and if there isn't, it is not equipped with immobilizer indicator lamp. For details of heated oxygen sensor (sensor 2), refer to Section 6E in this manual.

CONTENTS

General Description 8G-3
System and Location 8G-3
Immobilizer Control Module 8G-5
ECM 8G-5
On-Board Diagnostic System (Self-Diagnosis Function) 8G-5
Diagnosis 8G-8
Precautions in Diagnosing Troubles 8G-8
Precautions in identifying diagnostic trouble code 8G-8
Diagnostic Flow Table 8G-9
Diagnostic Trouble Code (DTC) Check (Immobilizer Control Module) 8G-11
[Vehicle not equipped with air bag system] 8G-11
[Vehicle equipped with air bag system] 8G-12
Diagnostic Trouble Code (DTC) Check (ECM) 8G-12
[Not using SUZUKI scan tool] (Except for vehicle equipped with immobilizer indicator lamp) 8G-12
[Using SUZUKI scan tool] 8G-13
Diagnostic Trouble Code Table 8G-14
Immobilizer control module 8G-14
Table A DTC is Not Output From Diagnostic Output Terminal (For Vehicle Not Equipped with Air Bag System) 8G-16
Table B Immobilizer Indicator Lamp Check For Vehicle Equipped with Immobilizer Indicator Lamp (Immobilizer Indicator Lamp Does Not Light at Ignition Switch ON) 8G-17
Table C Immobilizer Indicator Lamp Check for Vehicle Equipped with Immobilizer Indicator Lamp (Immobilizer Indicator Lamp Remains on After Engine Starts) 8G-18
Table D DTC is Not Output From Immobilizer Control Module (For Vehicle Equipped with Air Bag System) 8G-19

DTC11/32 Transponder Code Not Matched 8G-21
DTC31 Transponder Code Not Registered..... 8G-21
DTC12 Fault in Immobilizer Control Module 8G-21
DTC13 No Transponder Code Transmitted or Coil Antenna Opened / Shorted..... 8G-22
DTC21 ECM / Immobilizer Control Module Code Not Matched (Immobilizer Control Module Side)..... 8G-25
DTC81 ECM / Immobilizer Control Module Code Not Matched (P1623) (ECM Side).... 8G-25
DTC84 ECM / Immobilizer Control Module Code Not Registered (P1620)..... 8G-25
DTC82 (P1622) Fault in ECM..... 8G-25
DTC22 Ignition Switch Circuit Open / Short 8G-26
DTC23 No ECM / Immobilizer Control Module Code Transmitted From ECM or DLC Circuit Opened / Shorted 8G-28
DTC83 (P1621) No ECM / Immobilizer Control Module Code Transmitted From Immobilizer Control Module or DLC Circuit Opened / Shorted 8G-28
Inspection of ECM, Immobilizer Control Module and Its Circuit..... 8G-30
On-Vehicle Service 8G-33
Precautions in Handling Immobilizer Control System 8G-33
Immobilizer Control Module 8G-34
Coil Antenna (Vehicle not equipped with air bag system) 8G-34
How to Register Ignition Key..... 8G-36
Procedure After Immobilizer Control Module Replacement..... 8G-37
Procedure After ECM Replacement 8G-38
Special Tools 8G-39

General Description

System and Location

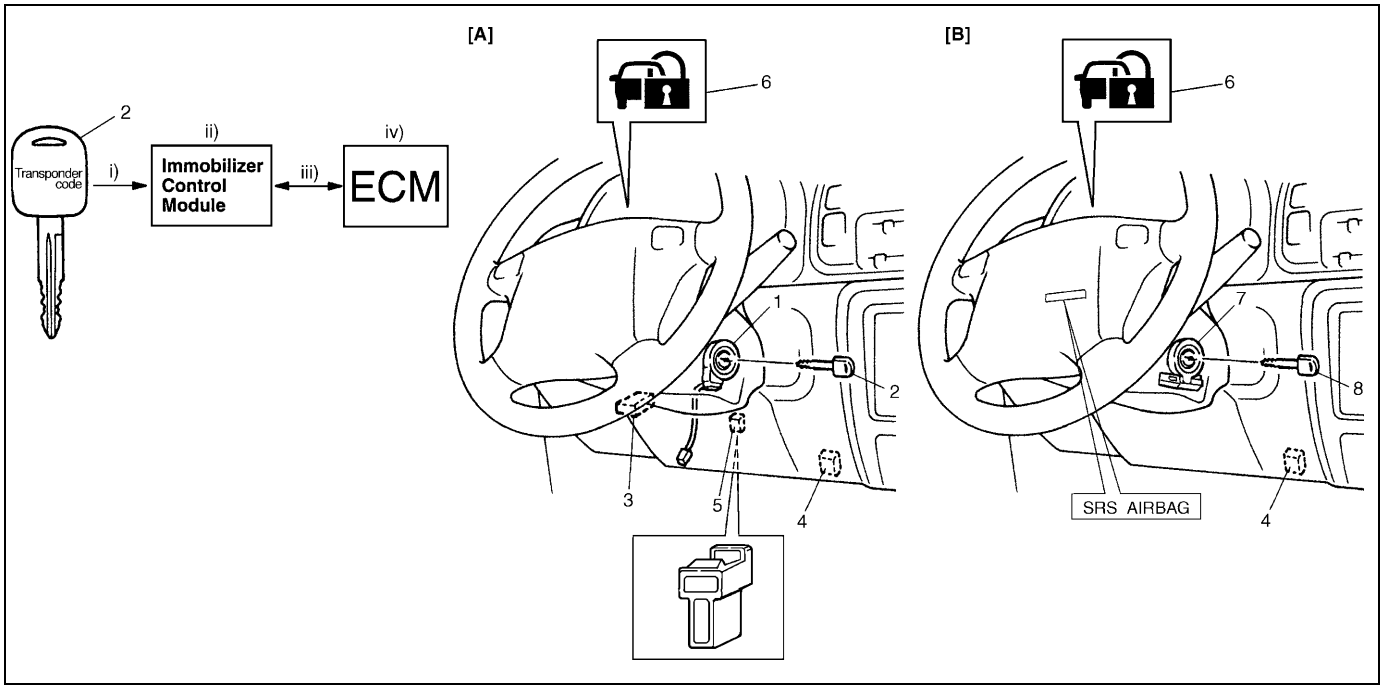

4. Data link connector (DLC)	6. Immobilizer indicator lamp (if equipped)
5. Immobilizer diagnostic coupler	

The immobilizer control system designed to prevent vehicle burglar consists of following components.

Vehicle not equipped with air bag system [A]
- Engine control module (ECM)
- Immobilizer control module (3)
- Ignition key with built-in transponder (Knob color: Black) (2)
- Coil antenna (1)

Vehicle equipped with air bag system [B]
- Engine control module (ECM)
- Immobilizer control module with coil antenna (7)
- Ignition key with built-in transponder (Knob color: Dark gray) (8)

Operation of this system is as follows.

i) Each ignition key has its own code (Transponder code) stored in memory. When the ignition switch is turned ON, Immobilizer Control Module tries to read the Transponder code through the coil antenna installed to the steering lock assembly.
ii) Immobilizer Control Module compares the Transponder code read in (1) and that registered in Immobilizer Control Module and checks if they match.
iii) When it is confirmed that two Transponder codes match each other as described above, Immobilizer Control Module and ECM check if ECM / Immobilizer Control Module codes registered in them respectively match.
iv) Only when it is confirmed that ECM / Immobilizer Control Module codes match, the engine starts running. If Transponder codes in Step ii) or ECM / Immobilizer Control Module codes in Step iii) do not match, ECM will stop operation of the injector and ignition of spark plug.

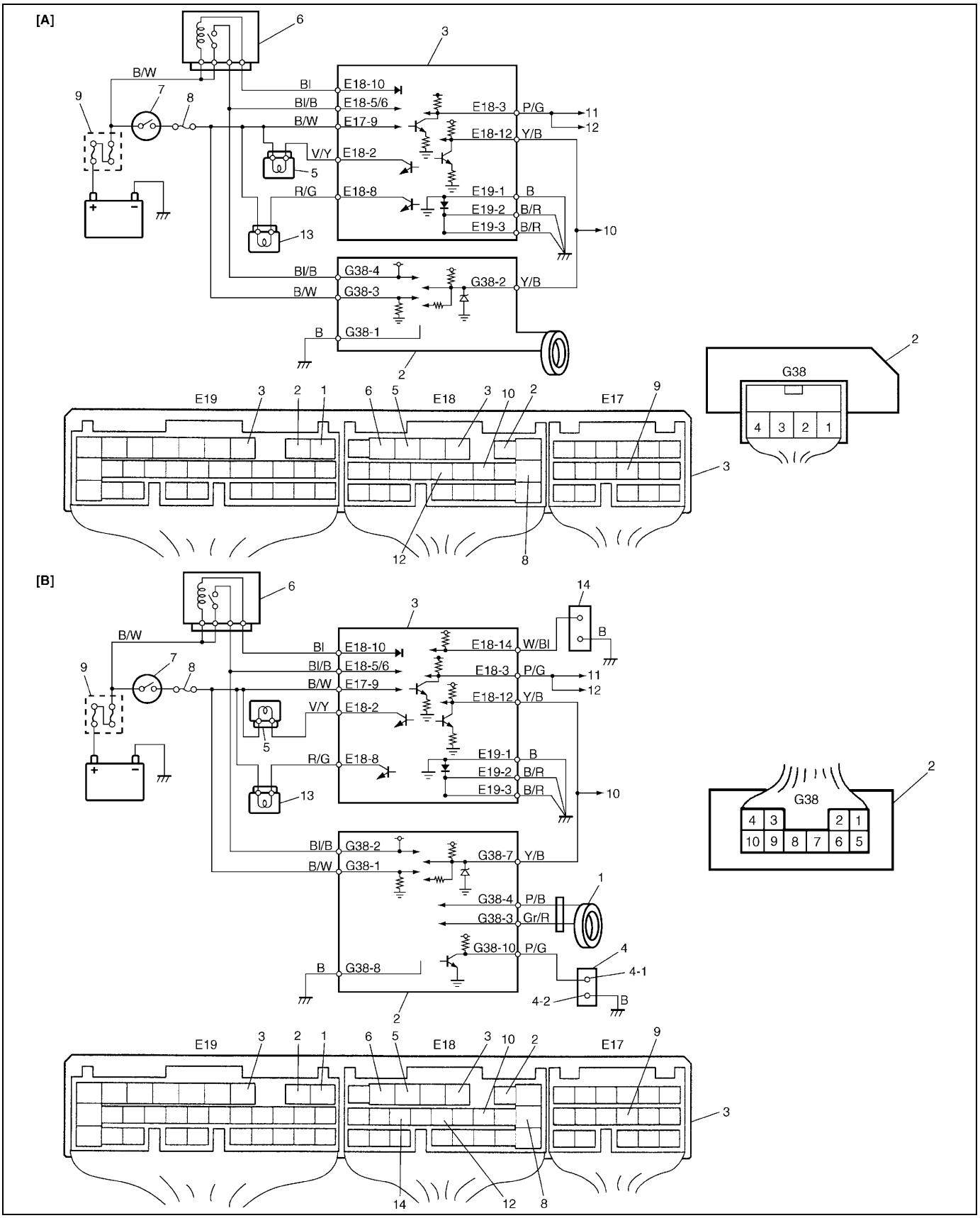

1. Coil antenna	5. Malfunction indicator lamp	11. To #7-pin in data link connector
2. Immobilizer Control Module	6. Main relay	12. To ABS control module SDM and TCM
3. ECM	7. Ignition switch	13. Immobilizer indicator lamp (if equipped)
4. Immobilizer diagnostic coupler	8. Fuse	14. Monitor coupler (Vehicle not equipped with immobilizer indicator lamp)
4-1. Diagnostic output terminal	9. Main fuse	[A] : Vehicle equipped with air bag system
4-2. Ground terminal	10. To #9-pin in data link connector	[B] : Vehicle not equipped with air bag system

Immobilizer Control Module

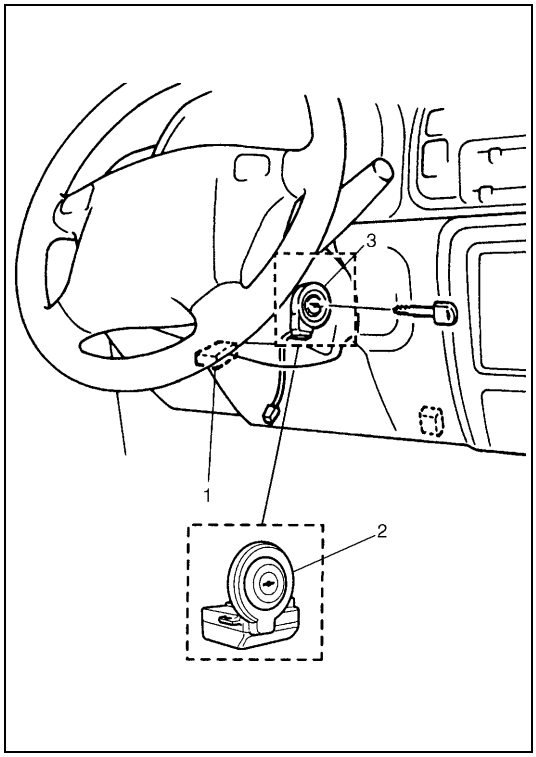

Immobilizer Control Module is installed to the steering lock assembly or the underside of the instrument panel at the driver's seat side.
As main functions, Immobilizer Control Module checks matching not only between the Transponder Code transmitted from the ignition key and that registered in Immobilizer Control Module (Up to 4 different Transponder codes can be registered.) but also between the ECM / Immobilizer Control Module code transmitted from ECM and that registered in Immobilizer Control Module. In addition, it has an on-board diagnostic system (self-diagnosis function) which is described in "On-Board Diagnostic System (Self-Diagnosis Function)" in this section.

1.	Immobilizer Control Module (Vehicle not equipped with air bag system)
2.	Immobilizer Control Module (Vehicle equipped with air bag system)
3.	Coil antenna (Vehicle not equipped with air bag system)

ECM

As main functions, ECM not only checks matching of ECM / Immobilizer Control Module code but also has an on-board diagnostic system (self-diagnosis function) as described in "On-Board Diagnostic System (Self-Diagnosis Function)" in this section.
For installation position of ECM, refer to "Engine Control Module" in Section 6E.

On-Board Diagnostic System (Self-Diagnosis Function)

Immobilizer Control Module and ECM diagnose troubles which may occur in the area including the following parts when the ignition switch is ON.

ECM:
- ECM / Immobilizer Control Module code
- Serial data link circuit
- ECM

Immobilizer Control Module:
- Transponder code
- Coil antenna
- ECM / Immobilizer Control Module code
- Serial data link circuit
- Immobilizer Control Module
- Ignition signal

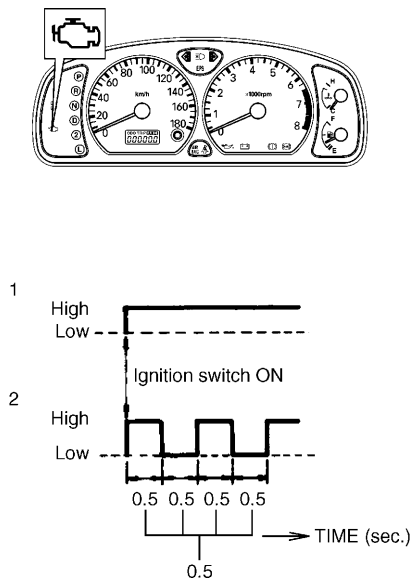

<Vehicle not equipped with immobilizer indicator lamp>

With the diagnosis switch terminal of monitor coupler for ECM not grounded, the ignition switch turned ON (but the engine at stop) and regardless of the condition of the electronic fuel injection system, ECM indicates whether a trouble has occurred in the immobilizer control system or not by causing the malfunction indicator lamp to flash or turn ON.

Malfunction indicator lamp is ON:

No trouble exists in the immobilizer control system.

Malfunction indicator lamp is flashing:

ECM or Immobilizer Control Module has detected some trouble in the immobilizer control system.

NOTE:

As soon as the ignition switch is turned ON, ECM and Immobilizer Control Module diagnose if a trouble has occurred in the immobilizer control system. While the diagnosis is being made, the malfunction indicator lamp stays ON and if the diagnosis result is “abnormal” (2), it immediately changes to flashing but if the result if “normal” (1), it remains ON. Diagnosis takes about 3 seconds at maximum

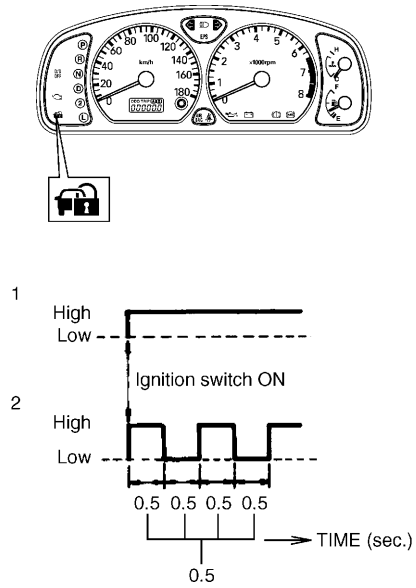

<Vehicle equipped with immobilizer indicator lamp>

With the ignition switch turned ON (but the engine at stop) regardless of the condition of the engine and emission control system, ECM indicates whether a trouble has occurred in the immobilizer control system or not by causing the immobilizer indicator lamp to flash or turn ON.

Immobilizer indicator lamp is ON:

No trouble exists in the immobilizer control system.

Immobilizer indicator lamp is flashing:

ECM or Immobilizer Control Module has detected some trouble in the immobilizer control system.

NOTE:

As soon as the ignition switch is turned ON, ECM and Immobilizer Control Module diagnose if a trouble has occurred in the immobilizer control system. While the diagnosis is being made, the immobilizer indicator lamp stays ON and if the diagnosis result is “abnormal” (2), it immediately changes to flashing but if the result if “normal” (1), it remains ON. Diagnosis takes about 3 seconds at maximum.

When ECM and Immobilizer Control Module detects a trouble which has occurred in the above areas, it stores DTC corresponding to the exact trouble area in ECM and Immobilizer Control Module memory.

DTCs stored in memory of each controller (Immobilizer Control Module and ECM) can be read by using the procedure described in “Diagnostic Trouble Code Check (Immobilizer Control Module)” and “Diagnostic Trouble Code Check (ECM)” in this section.

Diagnosis

Precautions in Diagnosing Troubles

Precautions in identifying diagnostic trouble code

ECM

<Vehicle not equipped with immobilizer indicator lamp>

- Before identifying diagnostic trouble code indicated by malfunction indicator lamp or Suzuki scan tool, don't disconnect couplers from ECM, battery cable from battery, ECM ground wire harness from engine.
  Such disconnection will clear trouble codes for engine and emission control system and immobilizer control system stored in memory of ECM.
- If abnormality or malfunction lies in two or more areas, malfunction indicator lamp indicates applicable codes three times each.
  And flashing of these codes is repeated as long as diagnosis terminal is grounded and ignition switch is held at ON position.
- When ECM detects a trouble in both engine and emission control system and immobilizer control system, malfunction indicator lamp indicates trouble codes of both systems alternately while the ignition switch is turned ON and the diagnosis terminal is grounded.
- Take a note of diagnostic trouble code indicated first.

<Vehicle equipped with immobilizer indicator lamp>

- Before identifying diagnostic trouble code indicated through Suzuki scan tool, don't disconnect couplers from ECM, battery cable from battery, ECM ground wire harness from engine.
  Such disconnection will clear trouble codes for engine and emission control system and immobilizer control system stored in memory of ECM.
- Take a note of diagnostic trouble code indicated first.

Immobilizer Control Module

- Take a note of diagnostic trouble code indicated first.

INTERMITTENT TROUBLES

- There are cases where output of diagnostic output terminal, malfunction indicator lamp and/or Suzuki scan tool indicate a diagnostic trouble code representing a trouble which occurred only temporarily and has gone. In such case, it may occur that good parts are replaced unnecessarily. To prevent such accident, be sure to follow instructions given below when checking by using "Diagnostic Flow Table".
  - When trouble can be identified, it is not an intermittent one:
    Check coil antenna, ignition key, wires and each connection and if they are all in good condition, substitute a known-good ECM and recheck.
  - When trouble can not be identified but output of diagnostic output terminal, malfunction indicator lamp and/or Suzuki scan tool indicate a trouble code:
    Diagnose trouble by using that code No. and if ignition key, coil antenna, wires and each connection are all in good condition, turn OFF ignition switch and then ON.

Then check what malfunction indicator lamp, output of diagnostic output terminal and/or Suzuki scan tool indicate.

Only when they indicate trouble code again, substitute a known-good ECM or Immobilizer Control Module and check again.

If they indicate not trouble code but normal code, it means that an intermittent trouble did occur and has gone. In this case, check wires and connections carefully again.

Diagnostic Flow Table

Vehicle Not Equipped With Immobilizer Indicator Lamp

Step	Action	Yes	No
1	1) Make sure that diagnosis switch terminal in monitor coupler is not grounded by service wire. See Fig. 1. 2) Check malfunction indicator lamp while ignition switch is ON (but without starting engine). See Fig. 2. Does malfunction indicator lamp flash?	Go to Step 3.	If malfunction indicator lamp remains ON, go to Step 2. If malfunction indicator lamp remains OFF, go to “Malfunction Indicator Lamp Check” in Section 6.
2	1) Using service wire (2), ground diagnosis switch terminal in monitor coupler (1). See Fig. 3. Does malfunction indicator lamp flash?	Immobilizer control system is in good condition.	Go to “Malfunction Indicator Lamp Check” in Section 6.
3	Does malfunction indicator lamp flash as Fig. 4?	Go to Step 4.	Go to “Malfunction Indicator Lamp Check” in Section 6.
4	1) Check DTC stored in immobilizer control module referring to “Diagnostic Trouble Code Check (Immobilizer Control Module)” in this section. Is there any DTC(s)?	Go to flow table for DTC No.	Go to Step 5.
5	1) Check DTC stored in ECM referring to “Diagnostic Trouble Code Check (ECM)” in this section. Is there any DTC(s)?	Go to flow table for DTC No.	Substitute a known-good ECM and recheck. See NOTE.

NOTE:

After replacing with a known-good ECM, register ECM / Immobilizer Control Module code in ECM by performing procedure described in “Procedure after ECM Replacement” in this section.

[A] Fig. 1 for step 1 / [B] Fig. 2 for step 1 / [C] Fig. 3 for step 2 and step 5

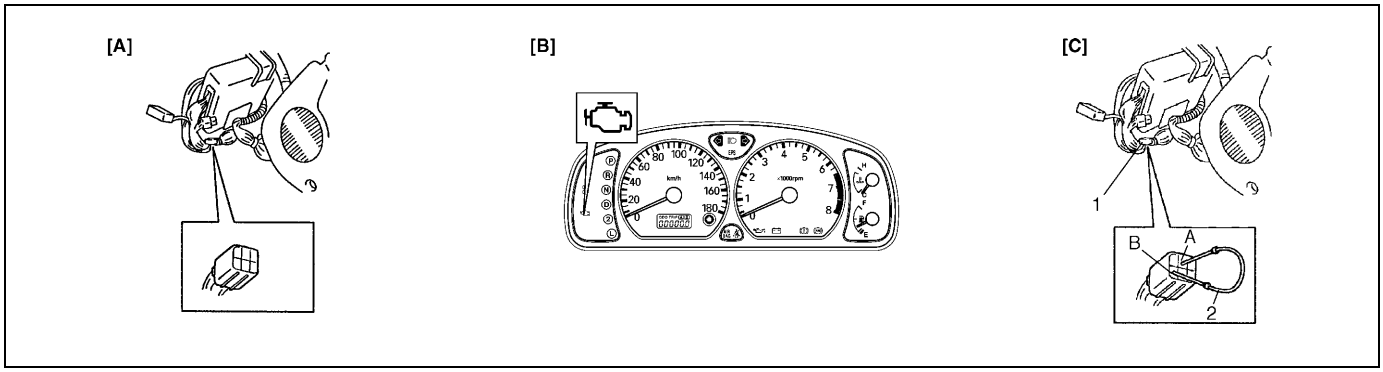

A :	Diagnosis switch terminal
B :	Ground terminal

Fig. 4 for step 3

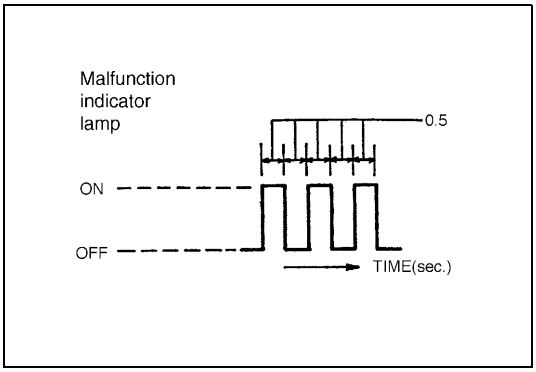

Vehicle Equipped with Immobilizer Indicator Lamp

Step	Action	Yes	No
1	1) Check immobilizer indicator lamp while ignition switch is ON (but without starting engine). See Fig. 1. Does immobilizer indicator lamp flash?	Go to Step 3.	If immobilizer indicator lamp remains ON, go to Step 2. If immobilizer indicator lamp remains OFF, go to “Immobilizer Indicator Lamp Check” in this section.
2	1) Check DTC stored in ECM referring to “Diagnostic Trouble Code Check (ECM)” in this section. Is there any DTC(s)?	Go to “Immobilizer Indicator Lamp Check” in this section.	Immobilizer control system is in good condition.
3	1) Check DTC stored in immobilizer control module referring to “Diagnostic Trouble Code Check (Immobilizer Control Module)” in this section. Is there any DTC(s)?	Go to flow table for DTC No.	Go to Step 4.
4	1) Check DTC stored in ECM referring to “Diagnostic Trouble Code Check (ECM)” in this section. Is there any DTC(s) for immobilizer control system?	Go to flow table for DTC No.	Substitute a known-good ECM and recheck. See NOTE.

NOTE:

After replacing with a known-good ECM, register ECM / Immobilizer Control Module code in ECM by performing procedure described in “Procedure after ECM Replacement” in this section.

Fig. 1 for step 1

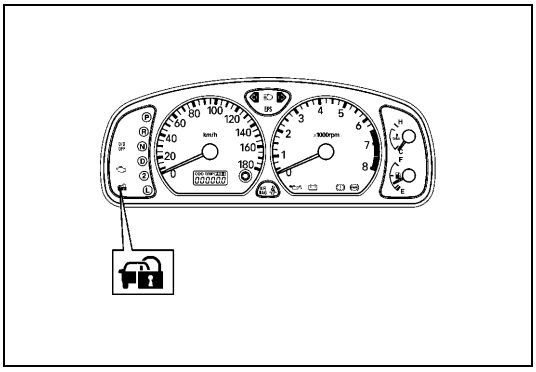

Diagnostic Trouble Code (DTC) Check (Immobilizer Control Module)

[Vehicle not equipped with air bag system]

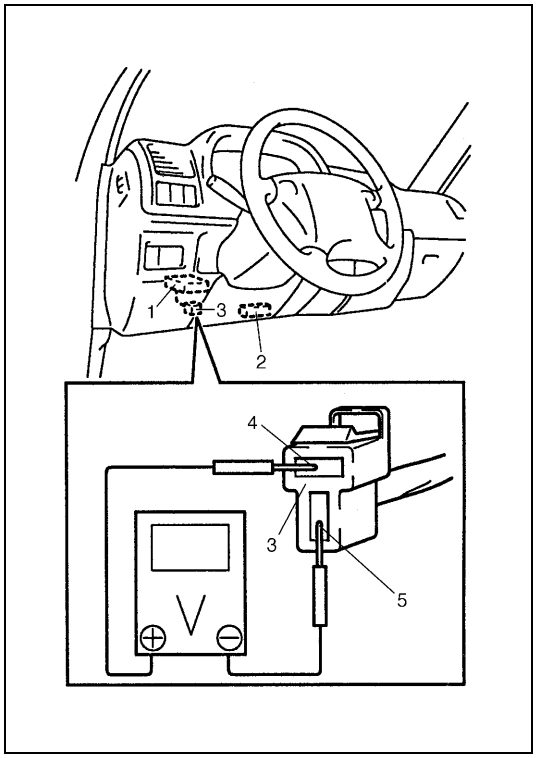

1) Using analog type voltmeter, connect positive probe to diagnostic output terminal (4) and negative probe to ground terminal (5) of immobilizer diagnostic coupler (3) with ignition switch turned ON.
2) Read deflection of voltmeter indicator which represents DTC as shown in example below and write it down. For details of DTC, refer to Immobilizer Control Module side in “Diagnostic Trouble Code Table”.
   If voltmeter indicator does not deflect, go to “Diagnostic Flow Table A”.

NOTE:

If abnormality or malfunction lies in two or more areas, voltmeter indicator lamp indicates applicable codes three times each.

1.	Immobilizer control module
2.	DLC (Data link connector)

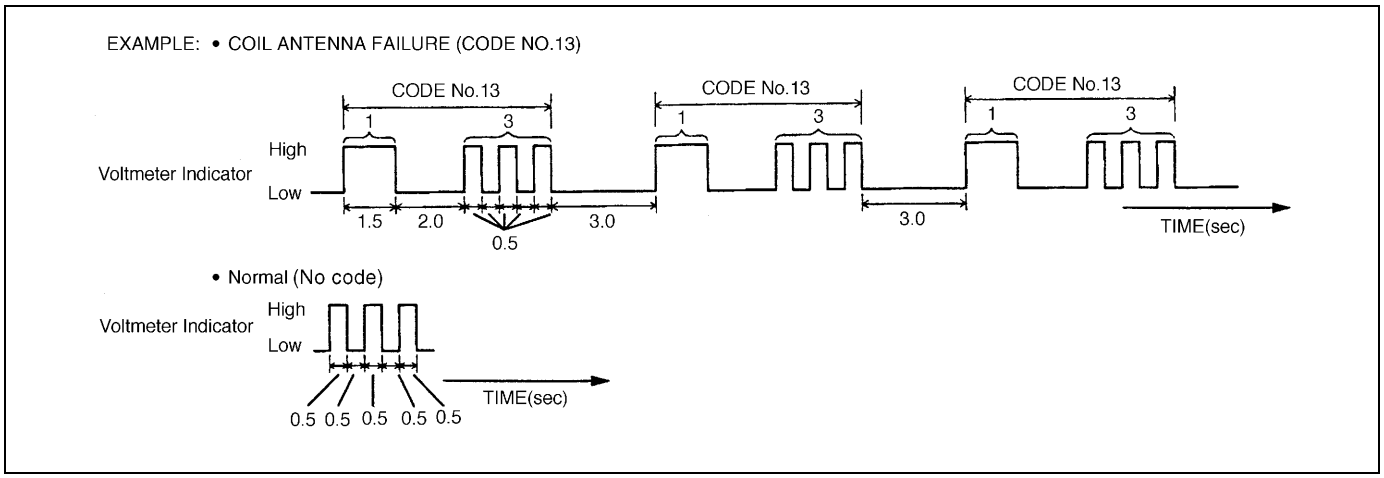

[Vehicle equipped with air bag system]

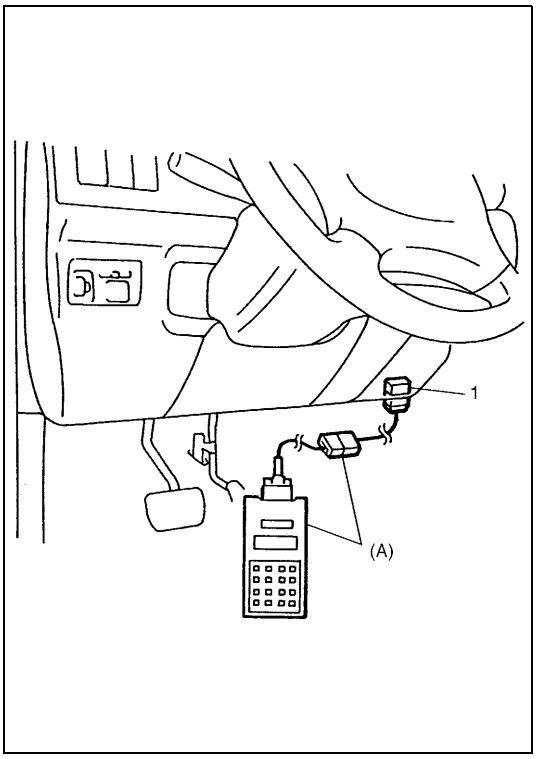

1) Turn ignition switch OFF.
2) After setting cartridge to Suzuki scan tool, connect it to data link connector (DLC) (1) located on underside of instrument panel at driver's seat side.

Special tool
(A) : Suzuki scan tool

3) Turn ignition switch ON.
4) Read DTC stored in immobilizer control module according to instructions displayed on Suzuki scan tool and print it or write it down. Refer to Suzuki scan tool operator's manual for further details.
   If communication between Suzuki scan tool and immobilizer control module is not possible, go to "Diagnostic Flow Table D".

NOTE:

When reading DTC stored in immobilizer control module using Suzuki scan tool, select "BCM" from the applications menu and "IMMOBILIZER" from the select system menu displayed on Suzuki scan tool.

5) After completing the check, turn ignition switch OFF and disconnect Suzuki scan tool from data link connector (DLC).

Diagnostic Trouble Code (DTC) Check (ECM)

[Not using SUZUKI scan tool] (Except for vehicle equipped with immobilizer indicator lamp)

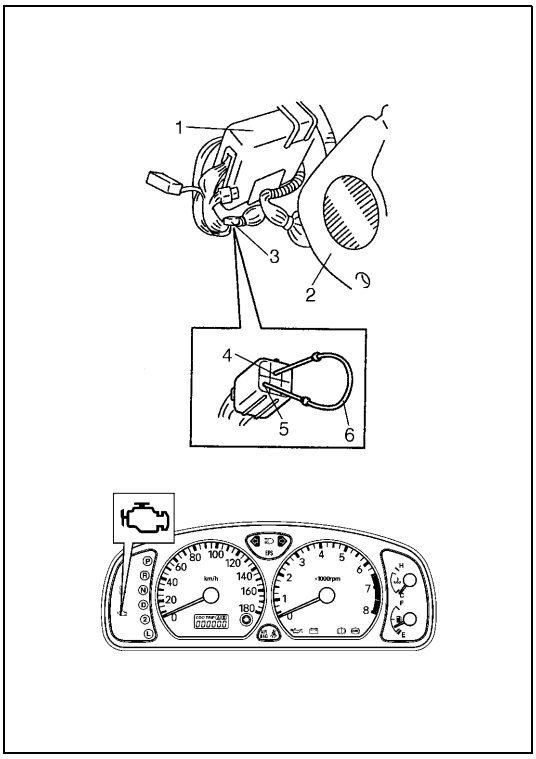

1) Using service wire (6), ground diagnostic switch terminal in monitor coupler (3).

1.	ECM
2.	Dash side trim
4.	To diagnostic switch
5.	To ground terminal

2) Read DTC from flashing pattern of malfunction indicator lamp as shown in example below and write it down. For details of DTC, refer to ECM side in "Diagnostic Trouble Code Table".
   If lamp remains ON, go to "Malfunction Indicator Lamp Check" in Section 6.

NOTE:

If abnormality or malfunction lies in two or more areas, malfunction indicator lamp indicates applicable codes three times each.
And flashing of these codes is repeated as long as diagnosis terminal is grounded and ignition switch is held at ON position.

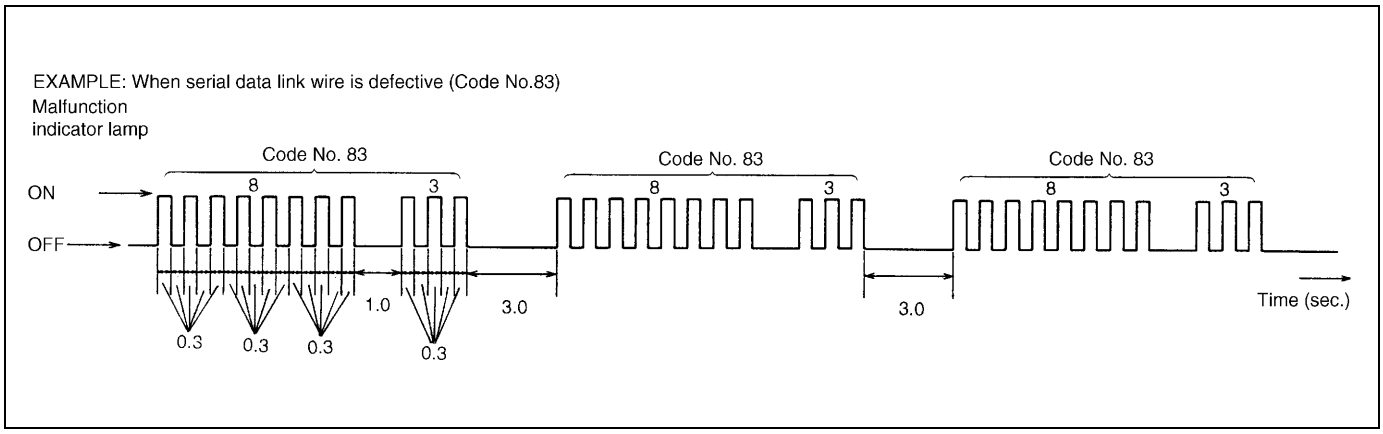

3) After completing the check, turn ignition switch OFF and disconnect service wire from monitor coupler.

[Using SUZUKI scan tool]

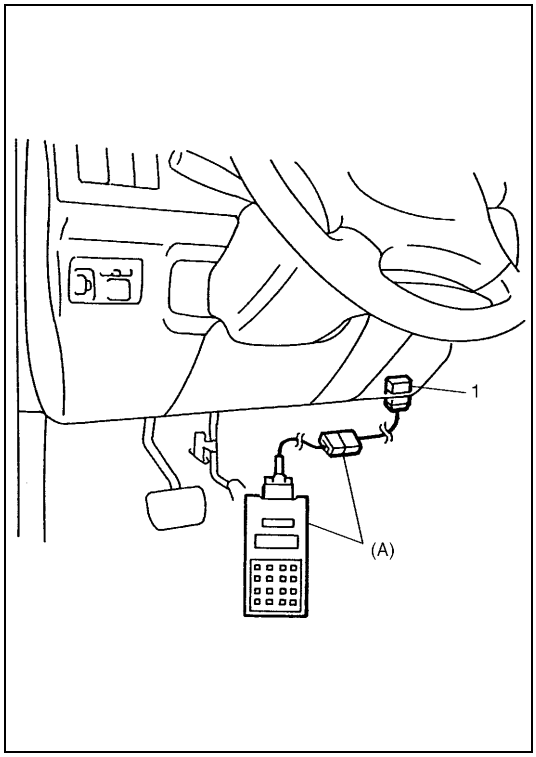

1) Turn ignition switch OFF.
2) After setting cartridge to Suzuki scan tool, connect it to data link connector (DLC) (1) located on underside of instrument panel at driver's seat side.

Special tool
(A) : Suzuki scan tool

3) Turn ignition switch ON.
4) Read DTC stored in ECM according to instructions displayed on Suzuki scan tool and print it or write it down. Refer to Suzuki scan tool operator's manual for further details.
   If communication between Suzuki scan tool and ECM is not possible, check if Suzuki scan tool is communicable by connecting it to ECM in another vehicle. If communication is possible in this case, Suzuki scan tool is in good condition. Then check data link connector and serial data line (circuit) in the vehicle with which communication was not possible.

NOTE:

- **When reading DTC stored in ECM using Suzuki scan tool, select "ECM" from the applications menu and "SUZUKI mode" from the communication mode menu displayed on Suzuki scan tool.**
- **If ECM detects a trouble in both engine and emission control system and immobilizer control system, Suzuki scan tool indicates trouble codes of both systems using Suzuki mode of ECM application.**

5) After completing the check, turn ignition switch OFF and disconnect Suzuki scan tool from data link connector (DLC).

Diagnostic Trouble Code Table

Immobilizer control module

DTC (indicated on Suzuki scan tool)	DTC (indicated by voltmeter indicator)	VOLTMETER INDICATION	DIAGNOSTIC AREA	DIAGNOSIS
NO DTC	–		Normal (No code)	This code appears when none of the other codes are identified.
11	11	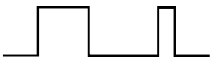	Transponder code	Diagnose trouble according to “Diagnostic Flow Table” corresponding to each code No.
31	31			
*32	*32	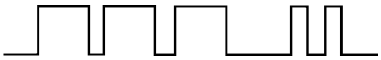		
12	12		Immobilizer Control Module	
13	13		Coil antenna or ignition key with built-in transponder	
21	21	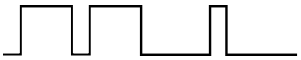	ECM / Immobilizer Control Module code	
22	22	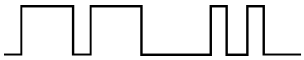	Ignition switch circuit	
23	23		Serial data link circuit	

NOTE:

The DTC with asterisk (*) in DTC column is for vehicle equipped with air bag system.

ECM

To learn how to read diagnostic trouble code (DTC) from flashing of malfunction indicator lamp, refer to “Diagnostic Trouble Code Table” in Section 6.

DTC (indicated on Suzuki scan tool)	DTC (indicated by MIL)	Malfunction Indicator lamp (MIL) flashing pattern	DIAGNOSTIC AREA	DIAGNOSIS
NO DTC	12		Normal	This code appears when it is confirmed that none of other trouble codes is set for immobilizer control system or engine and emission control system.
P1623	81		ECM / Immobilizer Control Module code	Diagnose trouble according to “Diagnostic Flow Table” corresponding to each code No.
P1620	84			
P1622	82		ECM	
P1621	83		Serial data link wire	

Table A DTC is Not Output From Diagnostic Output Terminal (For Vehicle Not Equipped with Air Bag System)

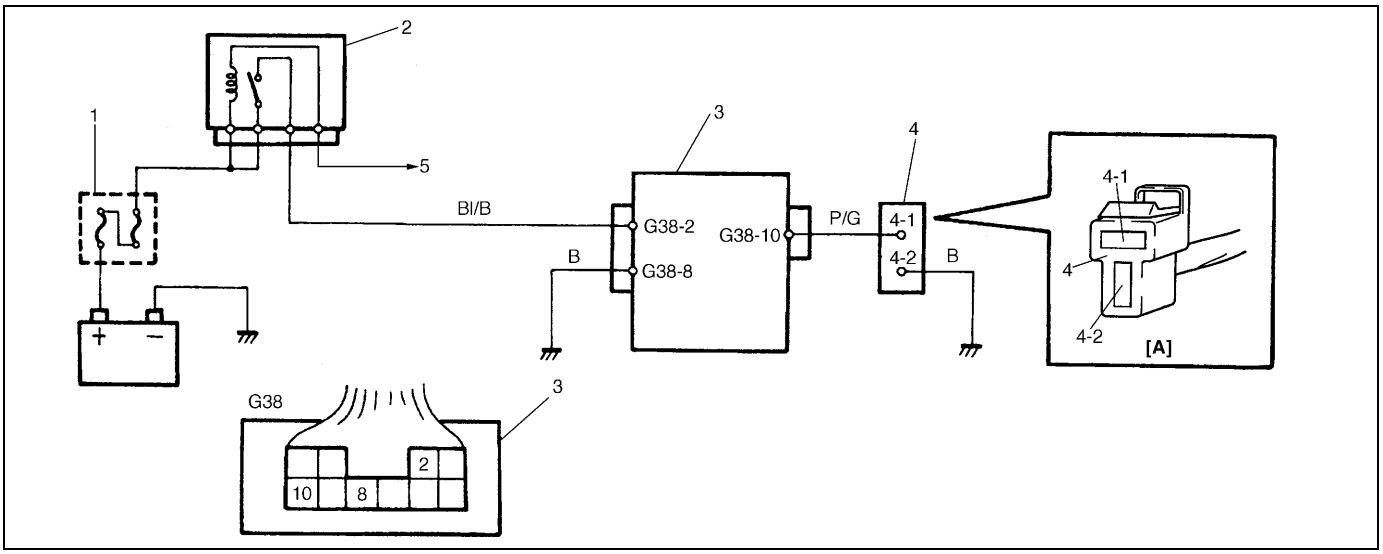

1. Main fuse	4. Immobilizer diagnostic coupler (Vehicle not equipped with immobilizer indicator lamp)	5. To ECM
2. Main relay	4-1. Ground terminal	[A] : In cabin
3. Immobilizer Control Module	4-2. Diagnostic output terminal	

Step	Action	Yes	No
1	Check voltage between G38-2 terminal and body ground with ignition switch turned ON. Is it 10 – 14V?	Go to Step 2.	“Bl/B” wire open.
2	1) Connect voltmeter between G38-10 terminal and body ground. 2) Does voltmeter indicator deflect?	Go to Step 3.	Poor G38-2, G38-10 or G38-8 connection. “B” wire of G38-8 terminal open. “P/G” wire between G38-10 terminal and diagnostic output terminal of immobilizer diagnostic coupler short. If wire and connections are OK, substitute a known-good Immobilizer Control Module and recheck. See NOTE.
3	1) Connect voltmeter between diagnostic output terminal of immobilizer diagnostic coupler and body ground. 2) Is it possible to read DTC by checking deflection of voltmeter indicator?	“B” wire of ground terminal for immobilizer diagnostic coupler open.	“P/G” wire between G38-10 terminal and diagnostic output terminal of immobilizer diagnostic coupler open.

NOTE:

After replacing with a known-good Immobilizer Control Module, register ECM / Immobilizer Control Module code in ECM and Transponder code and ECM / Immobilizer Control Module code in Immobilizer Control Module by performing procedure described in “Procedure After Immobilizer Control Module Replacement” in this section.

Table B Immobilizer Indicator Lamp Check For Vehicle Equipped with Immobilizer Indicator Lamp (Immobilizer Indicator Lamp Does Not Light at Ignition Switch ON)

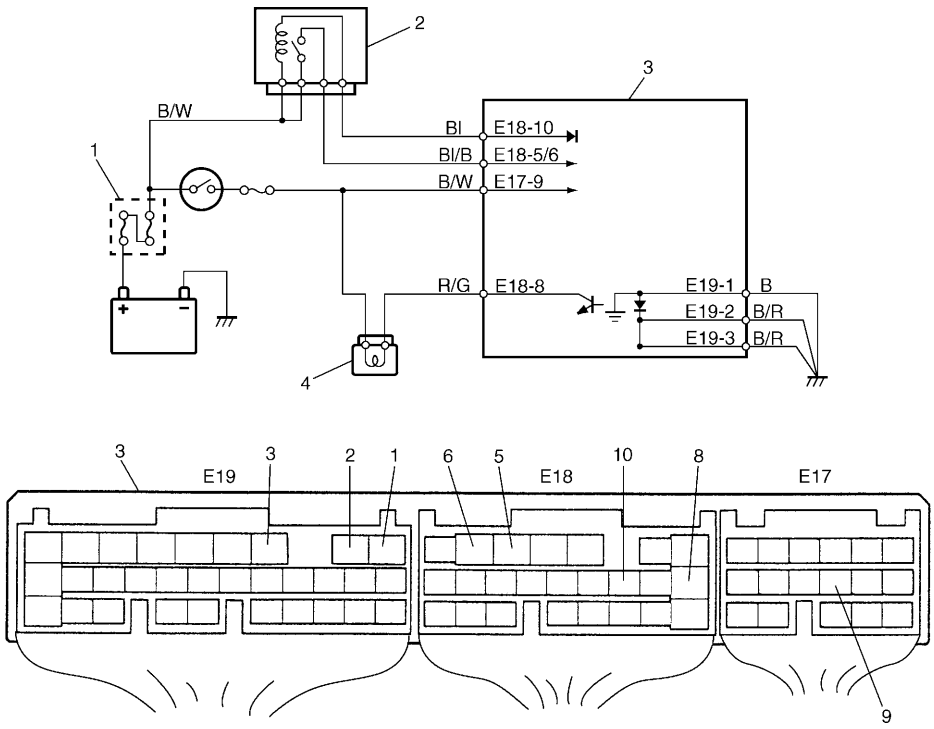

1. Main fuse	2. Main relay	3. ECM	4. Immobilizer indicator lamp

Step	Action	Yes	No
1	1) Turn ignition switch ON. Do other indicator / warning lights in combination meter come ON?	Go to Step 2.	“IG” fuse blown, main fuse blown, ignition switch malfunction, “B/W” circuit between “IG” fuse and combination meter or poor coupler connection at combination meter.
2.	1) Turn ignition switch OFF and disconnect connectors from ECM. 2) Check for proper connection to ECM at terminal E18-8. 3) If OK, then using service wire, ground terminal E18-8 in connector disconnected. Does immobilizer indicator lamp turn on at ignition switch ON?	Substitute a known-good ECM and recheck.	Bulb burned out or “Bl” wire circuit open.

Table C Immobilizer Indicator Lamp Check for Vehicle Equipped with Immobilizer Indicator Lamp (Immobilizer Indicator Lamp Remains on After Engine Starts)

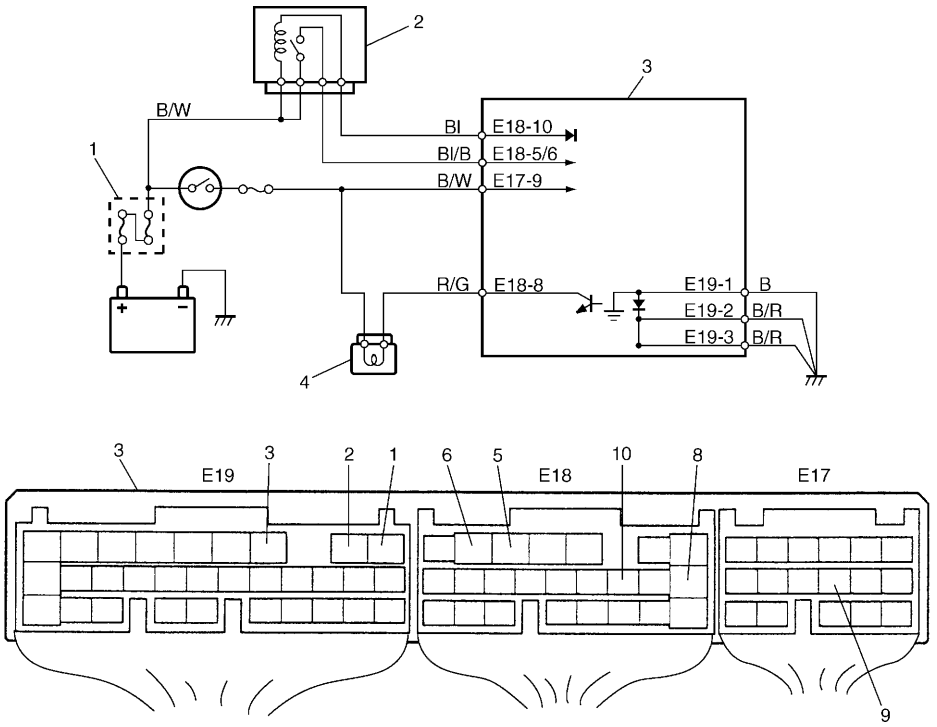

1. Main fuse	2. Main relay	3. ECM	4. Immobilizer indicator lamp

Step	Action	Yes	No
1	1) With ignition switch OFF, disconnect couplers from ECM. Does immobilizer indicator lamp turn ON at ignition switch ON?	“R/G” wire shorted to ground circuit.	Substitute a known-good ECM and recheck.

Table D DTC is Not Output From Immobilizer Control Module (For Vehicle Equipped with Air Bag System)

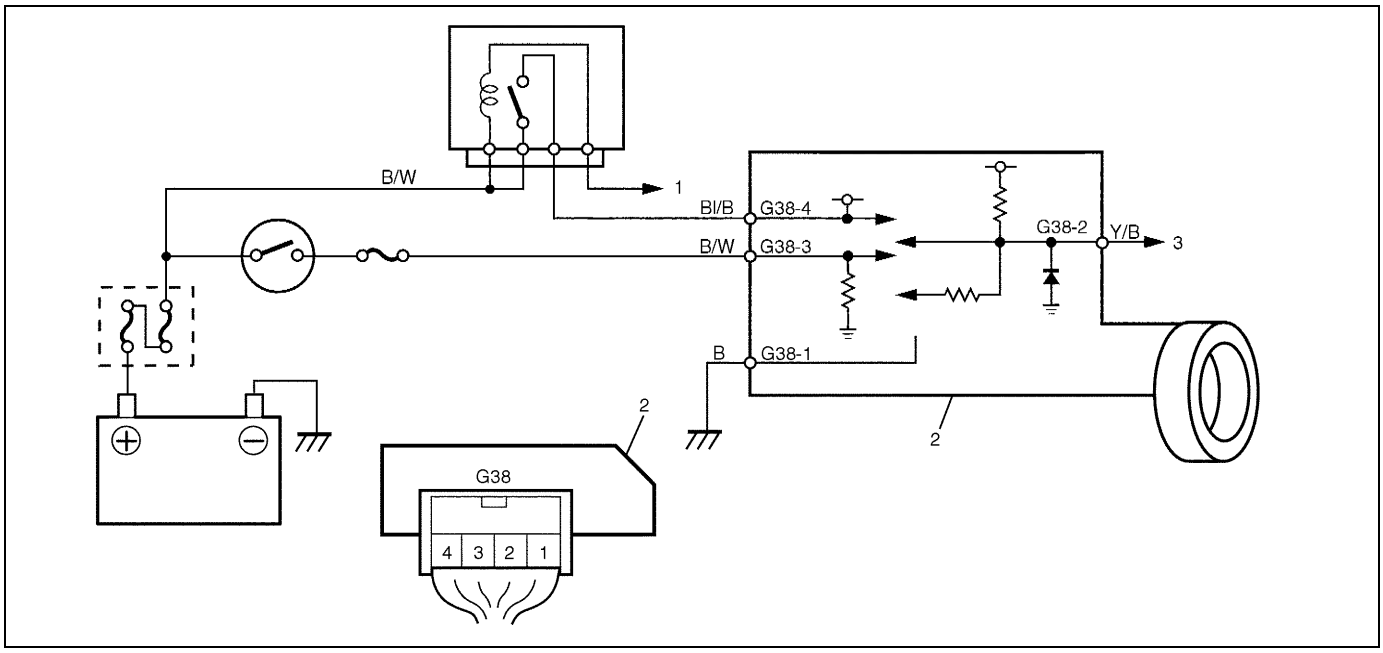

1. To ECM	2. Immobilizer control module	3. To #9-pin in DLC

Step	Action	Yes	No
1	Check voltage between G38-4 terminal and body ground with ignition switch turned ON. See Fig 1. Is it 10 – 14 V?	Go to Step 2.	“Bl/B” wire open or short to ground.
2	1) Disconnect coupler at immobilizer control module. 2) Is there continuity between coupler terminal G38-1 and body ground? See Fig 2.	Poor “G38-4” or “G38-1” connection Poor #9-pin connection in DLC Serial data line “Y/B” open or short to ground If connections and line are OK, substitute a known-good Immobilizer Control Module and recheck. See NOTE.	“B” wire open.

NOTE:

After replacing with a known-good Immobilizer Control Module, register ECM / Immobilizer Control Module code in ECM and Transponder code and ECM / Immobilizer Control Module code in Immobilizer Control Module by performing procedure described in “Procedure After Immobilizer control Module Replacement” in this section.

[A] Fig. 1 for step 1 / [B] Fig. 2 for step 2

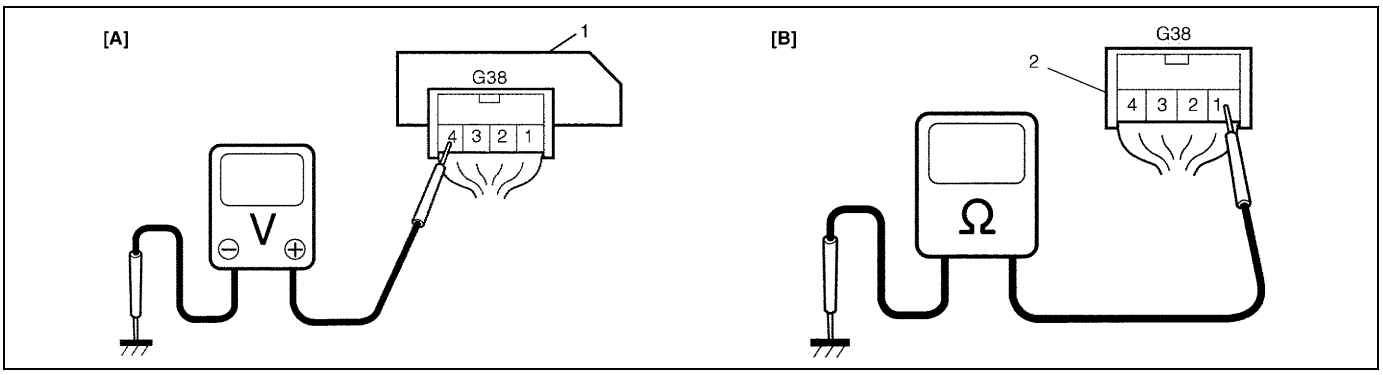

1.	Immobilizer control module
2.	Immobilizer control module coupler

DTC11/32 Transponder Code Not Matched

DESCRIPTION:

Immobilizer Control Module checks if Transponder code transmitted from ignition key and that registered in Immobilizer Control Module match when ignition switch is ON. If they do not, DTC 11 and/or 32 are set.

INSPECTION:

Register ignition key with built-in transponder by using SUZUKI scan tool and performing following steps.

1) Register Transponder code in Immobilizer Control Module by performing procedure described in “How To Register Ignition Key”.
2) Turn ignition switch OFF, then turn it ON and check that DTC11 and/or 32 are not set.

DTC31 Transponder Code Not Registered

DESCRIPTION:

Immobilizer Control Module checks if Transponder code transmitted from ignition key and that registered in Immobilizer Control Module match when ignition switch is ON. If there is no Transponder code registered in Immobilizer Control Module, this DTC is set.

INSPECTION:

Register ignition key with built-in transponder by using SUZUKI scan tool and performing following steps.

1) Register Transponder code in Immobilizer Control Module by performing procedure described in “How To Register Ignition Key”.
2) Turn ignition switch OFF, then turn it ON and check that DTC31 is not set.

DTC12 Fault in Immobilizer Control Module

DESCRIPTION:

This DTC is set when an internal fault is detected in Immobilizer Control Module.

INSPECTION:

Step	Action	Yes	No
1	1) Ignition switch “OFF”. 2) Disconnect connectors from Immobilizer Control Module. 3) Check for proper connection to Immobilizer Control Module at all terminals. Are they in good condition?	Substitute a known-good Immobilizer Control Module and recheck. See NOTE.	Repair or replace.

NOTE:

After replacing with a known-good Immobilizer Control Module, register ECM / Immobilizer Control Module code in ECM and Transponder code and ECM / Immobilizer Control Module code in Immobilizer Control Module by performing procedure described in “Procedure After Immobilizer Control Module Replacement” in this section.

DTC13 No Transponder Code Transmitted or Coil Antenna Opened / Shorted

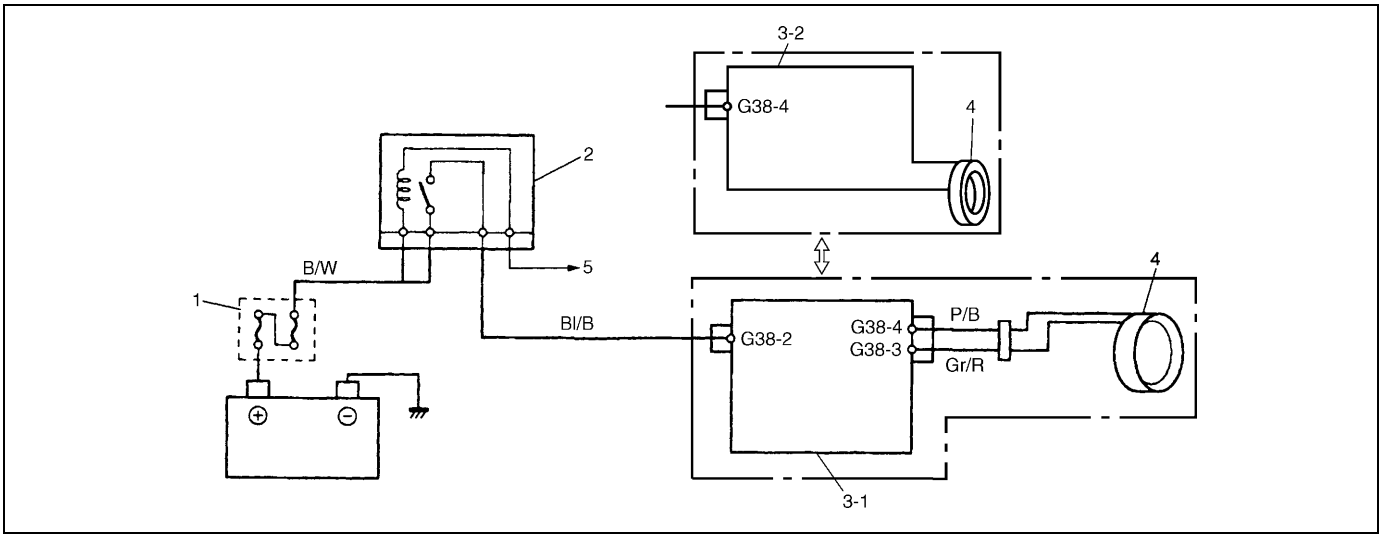

1. Main fuse	3-1. Immobilizer Control Module (Vehicle not equipped with air bag system)	4. Coil antenna
2. Main relay	3-2. Immobilizer Control Module (Vehicle equipped with air bag system)	5. To ECM

DESCRIPTION:

Immobilizer Control Module energizes the coil antenna when the ignition switch is ON and reads Transponder code from the ignition key. When Immobilizer Control Module cannot read Transponder code from the ignition key even when the coil antenna is energized, this DTC is set.

INSPECTION:

Vehicle not equipped with air bag system

Step	Action	Yes	No
1	Check that knob shape and color for ignition key are as shown below. • Knob color: Black • Knob shape: the same as shown in Fig.1. Is it the original one?	Go to Step 2.	Replace ignition key with original one and follow “Diagnostic Flow Table” again.
2	1) Disconnect coil antenna coupler (1) with ignition switch turned OFF. 2) Is there continuity between coil antenna coupler terminals A and B? (See Fig. 2)	Go to Step 3.	Coil antenna open.
3	Measure resistance between terminals of coil antenna coupler (1) and body ground. (See Fig. 3) Is it ∞ (infinity) Ω?	Go to Step 4.	Coil antenna shorted to ground.

Step	Action	Yes	No
4	1) With coil antenna coupler disconnected, disconnect Immobilizer Control Module coupler. 2) Measure resistance between coil antenna terminals of Immobilizer Control Module coupler (1). (See Fig. 4) Is it ∞ (infinity) Ω?	Go to Step 5.	“P/B” wire shorted to “Gr/R” wire.
5	Measure resistance between terminal G38-4 of Immobilizer Control Module coupler (1) and body ground. (See Fig. 5) Is it ∞ (infinity) Ω?	Go to Step 6.	“P/B” wire shorted to ground.
6	Measure resistance between terminal G38-3 of Immobilizer Control Module coupler (1) and body ground. (See Fig. 6) Is it ∞ (infinity) Ω?	Go to Step 7.	“Gr/R” wire shorted to ground.
7	1) Connect coil antenna coupler. 2) Is there continuity between Immobilizer Control Module coupler (1) terminals G38-4 and G38-3? (See Fig. 7)	Go to Step 8.	“P/B” or “Gr/R” wire open Poor coil antenna-to-coupler
8	1) If connections are OK, connect Immobilizer Control Module coupler and substitute a known-good coil antenna. 2) Is DTC 13 also indicated with ignition switch turned ON?	Go to Step 9.	Faulty coil antenna.
9	Is DTC 13 still indicated even when another ignition key (with built-in transponder) for that vehicle used?	Substitute a known-good Immobilizer Control Module and recheck. See NOTE.	Faulty transponder.

NOTE:

After replacing with a known-good Immobilizer Control Module, register ECM / Immobilizer Control Module code in ECM and Transponder code and ECM / Immobilizer Control Module code in Immobilizer Control Module by performing procedure described in “Procedure After Immobilizer Control Module Replacement” in this section.

[A] Fig. 1 for step 1 / [B] Fig. 2 for step 2 / [C] Fig. 3 for step 3

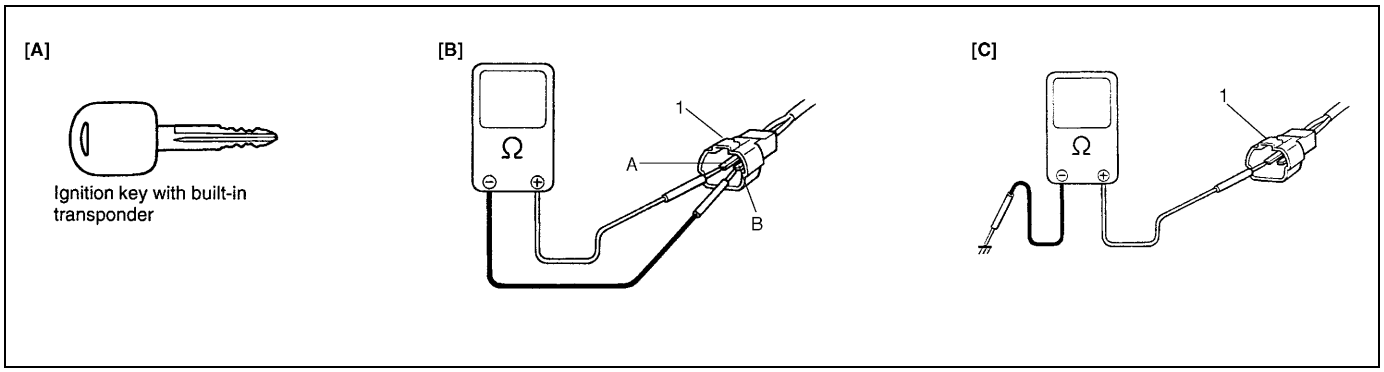

[D] Fig. 4 for step 4 / [E] Fig. 5 for step 5 / [F] Fig. 6 for step 6

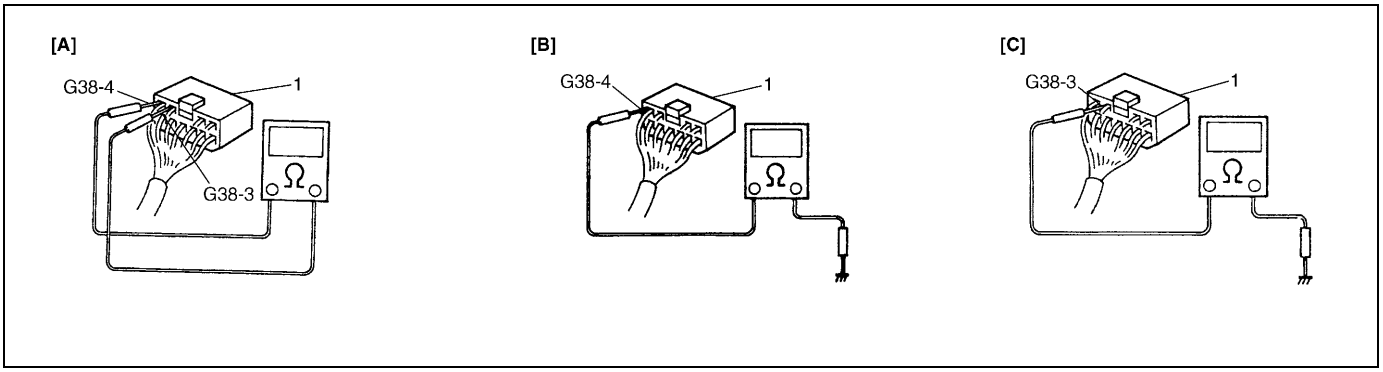

Fig. 7 for step 7

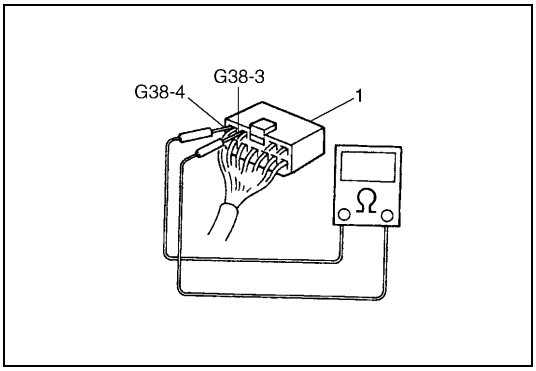

Vehicle Equipped with Air Bag System

Step	Action	Yes	No
1	Check that knob shape and color for ignition key are as shown below. • Knob color: Dark gray • Knob shape: the same as shown in Fig.1. Is it the original one?	Substitute a known-good Immobilizer Control Module and recheck. See NOTE.	Replace ignition key with original one and follow “Diagnostic Flow Table” again.

NOTE:

After replacing with a known-good Immobilizer Control Module, register ECM / Immobilizer Control Module code in ECM and Transponder code and ECM / Immobilizer Control Module code in Immobilizer Control Module by performing procedure described in “Procedure After Immobilizer Control Module Replacement” in this section.

Fig. 1 for step 1

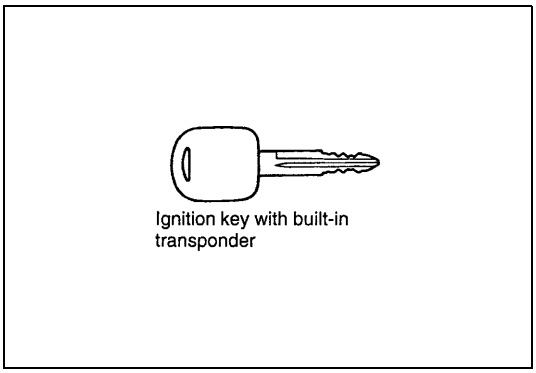

DTC21 ECM / Immobilizer Control Module Code Not Matched (Immobilizer Control Module Side)

DTC81 ECM / Immobilizer Control Module Code Not Matched (P1623) (ECM Side)

DTC84 ECM / Immobilizer Control Module Code Not Registered (P1620)

DESCRIPTION:

- DTC21
  Immobilizer Control Module checks if ECM / Immobilizer Control Module code transmitted from ECM and that registered in Immobilizer Control Module match when ignition switch is ON. If they do not, this DTC is set.
- DTC81 (P1623)
  ECM checks if ECM / Immobilizer Control Module code transmitted from Immobilizer Control Module and that registered in ECM match when ignition switch is ON. If they do not, this DTC is set.
- DTC84 (P1620)
  ECM checks if code transmitted from Immobilizer Control Module and that registered in ECM match when ignition switch is ON. If there is no ECM / Immobilizer Control Module code registered in ECM, this DTC is set.

INSPECTION:

Perform procedure described in “Procedure After ECM Replacement” in this section.

DTC82 (P1622) Fault in ECM

DESCRIPTION:

This DTC is set when an internal fault is detected in ECM.

INSPECTION:

Step	Action	Yes	No
1	1) Ignition switch “OFF”. 2) Disconnect connectors from ECM. 3) Check for proper connection to ECM at all terminals. Are they in good condition?	Substitute a known-good ECM and recheck. See NOTE.	Repair or replace.

NOTE:

After replacing with a known-good ECM, register ECM / Immobilizer Control Module code in ECM by performing procedure described in “Procedure After ECM Replacement” in this section.

DTC22 Ignition Switch Circuit Open / Short

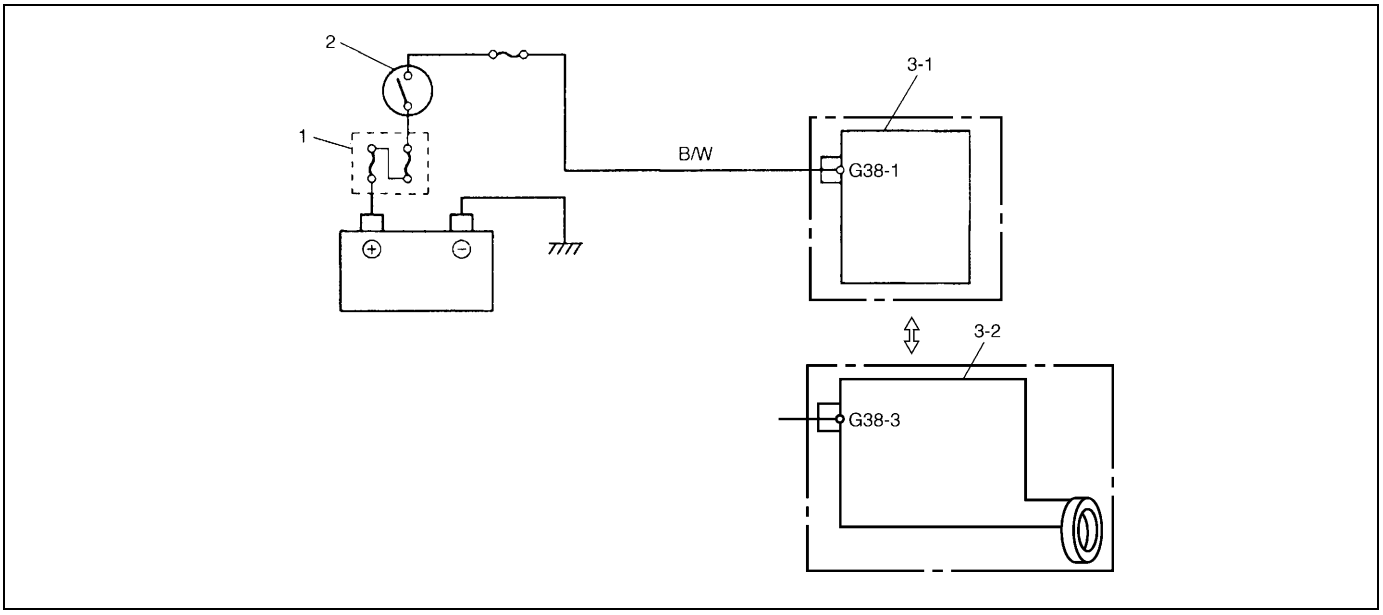

1. Main fuse	2. Ignition switch	3-1. Immobilizer Control Module (Vehicle not equipped with air bag system)	3-2. Immobilizer Control Module (Vehicle equipped with air bag system)

DESCRIPTION:

Immobilizer Control Module monitors ignition signal when the ignition switch is ON. This DTC is set when no ignition signal input is detected by Immobilizer Control Module.

INSPECTION:

Step	Action	Yes	No
1	Check voltage between Immobilizer Control Module coupler terminal shown below and body ground with ignition switch turned ON. (See Fig.1) • Terminal for vehicle without air bag system: “G38-1” • Terminal for vehicle with air bag system: “G38-3” Is it 10 – 14V?	<Vehicle without air bag system> Poor G38-1 terminal connection <Vehicle with air bag system> Poor G38-3 terminal connection If connection is OK, substitute a known-good Immobilizer Control Module and recheck. See NOTE.	“B/W” wire open or short.

NOTE:

After replacing with a know-good Immobilizer Control Module, register ECM / Immobilizer Control Module code in ECM and Transponder code and ECM / Immobilizer Control Module code in Immobilizer Control Module by performing procedure described in “Procedure After Immobilizer Control Module Replacement” in this section.

Fig. 1 for step 1

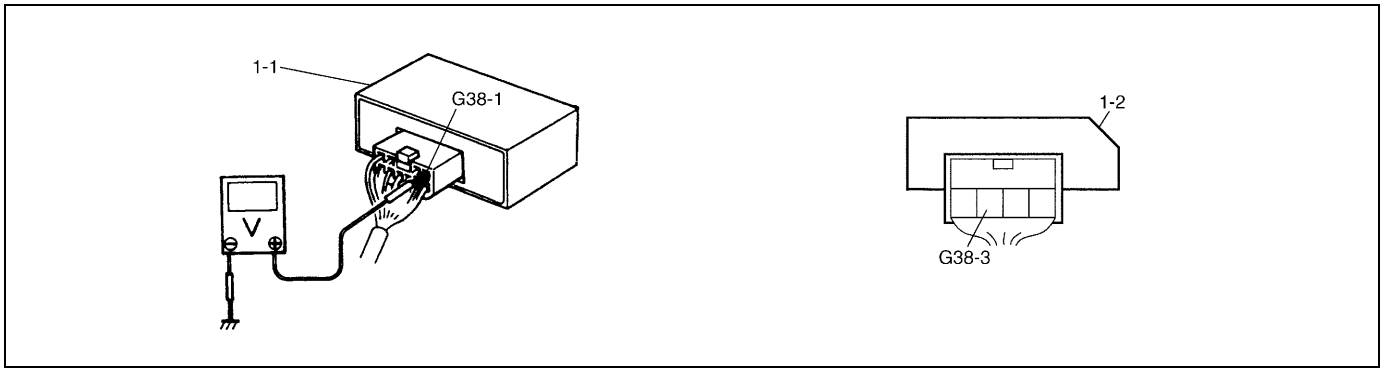

1-1.	Immobilizer Control Module (Vehicle not equipped with air bag system)
1- 2.	Immobilizer Control Module (Vehicle equipped with air bag system)

DTC23 No ECM / Immobilizer Control Module Code Transmitted From ECM or DLC Circuit Opened / Shorted

DTC83 (P1621) No ECM / Immobilizer Control Module Code Transmitted From Immobilizer Control Module or DLC Circuit Opened / Shorted

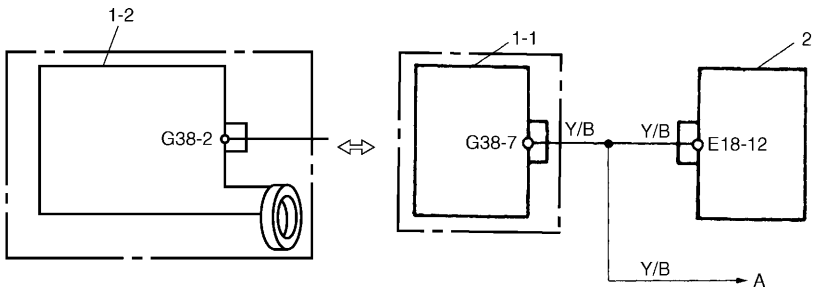

1-1. Immobilizer Control Module (Vehicle not equipped with air bag system)	1-2. Immobilizer Control Module (Vehicle equipped with air bag system)	2. ECM	A. To data link connector (DLC)

DESCRIPTION:

When the ignition switch is ON, Immobilizer Control Module requests ECM and ECM requests Immobilizer Control Module to transmit ECM / Immobilizer Control Module code. If ECM / Immobilizer Control Module code is not transmitted from ECM or Immobilizer Control Module, Immobilizer Control Module sets DTC23 and ECM sets DTC83.

INSPECTION:

Step	Action	Yes	No
1	Check voltage between Immobilizer Control Module coupler terminal shown below and body ground with ignition switch turned ON. (See Fig. 1) • Terminal for vehicle without air bag system: “G38-7” • Terminal for vehicle with air bag system: “G38-2” Is it 4 – 5V?	Go to Step 2.	“Y/B” wire short.
2	1) Disconnect ECM coupler with ignition switch turned OFF. 2) Is there continuity between Immobilizer Control Module coupler terminal shown below and serial data link terminal (E18-12) of ECM coupler? (For positions of Data link connector terminal of ECM coupler, refer to “System and Location” in this section.) • Terminal for vehicle without air bag system: “G38-7” • Terminal for vehicle with air bag system: “G38-2”	<Vehicle without air bag system> Poor G38-7 terminal connection or poor data link connector terminal connection (ECM) <Vehicle with air bag system> Poor G38-2 terminal connection or poor data link connector terminal connection (ECM) If connections are OK, substitute a known-good ECM or Immobilizer Control Module and recheck. See NOTE.	“Y/B” wire between Immobilizer Control Module and ECM open.

NOTE:

- **After replacing with a known-good ECM, register ECM / Immobilizer Control Module code in ECM by performing procedure described in "Procedure After ECM Replacement" in this section.**
- **After replacing with a known-good Immobilizer Control Module, register ECM / Immobilizer Control Module code in ECM and Transponder code and ECM / Immobilizer Control Module code in Immobilizer Control Module by performing procedure described in "Procedure After Immobilizer Control Module Replacement" in this section.**

Fig. 1 for step 1

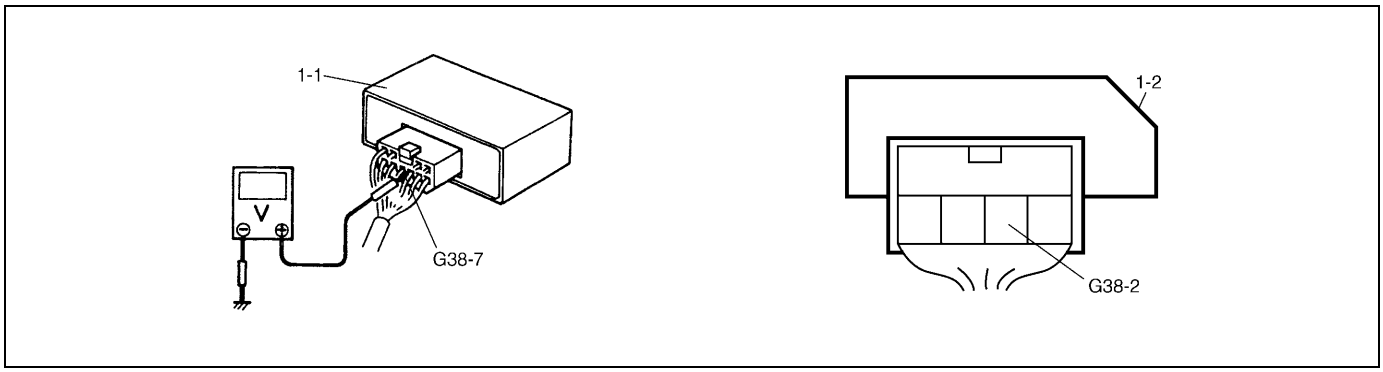

1-1.	Immobilizer Control Module (Vehicle not equipped with air bag system)
1-2.	Immobilizer Control Module (Vehicle equipped with air bag system)

Fig. 2 for step 2

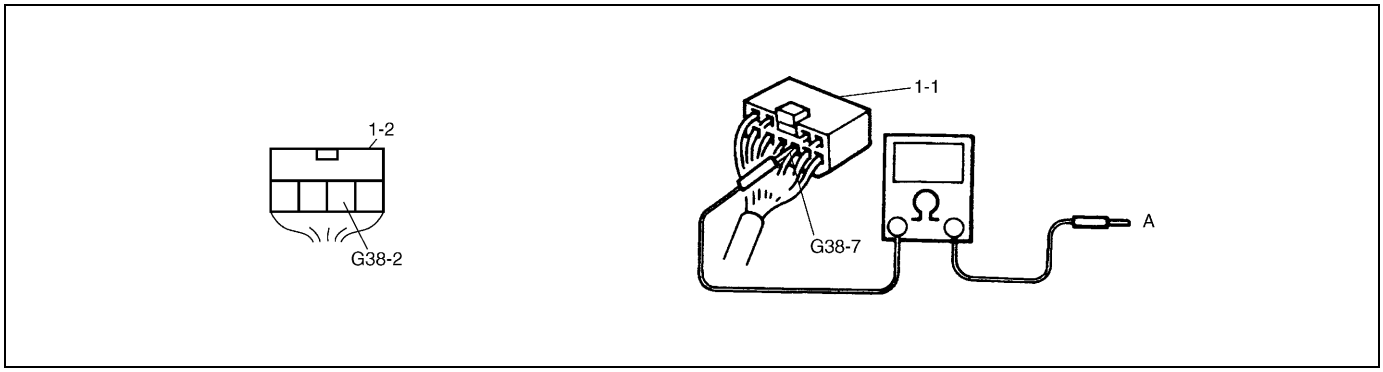

1-1.	Immobilizer Control Module coupler disconnected (Vehicle not equipped with air bag system)
1-2.	Immobilizer Control Module coupler disconnected (Vehicle equipped with air bag system)
A.	Connect to serial data link terminal (E18-12) of ECM coupler disconnected

Inspection of ECM, Immobilizer Control Module and Its Circuit

ECM, Immobilizer Control Module and its circuit can be checked at ECM wiring couplers and Immobilizer Control Module wiring coupler by measuring voltage. Described here is only inspection of Immobilizer Control Module. For inspection of ECM, refer to “Inspection of ECM and Its Circuits” in Section 6.

CAUTION:

Immobilizer Control Module cannot be checked by itself. It is strictly prohibited to connect voltmeter or ohmmeter to Immobilizer Control Module with coupler disconnected from it.

Voltage Check

1) Remove Immobilizer Control Module, referring to “Immobilizer Control Module” for removal in this section.
2) Connect Immobilizer Control Module coupler to Immobilizer Control Module.
3) Check voltage at each terminal of coupler connected.

NOTE:

As each terminal voltage is affected by the battery voltage, confirm that it is 11V or more when ignition switch is ON.

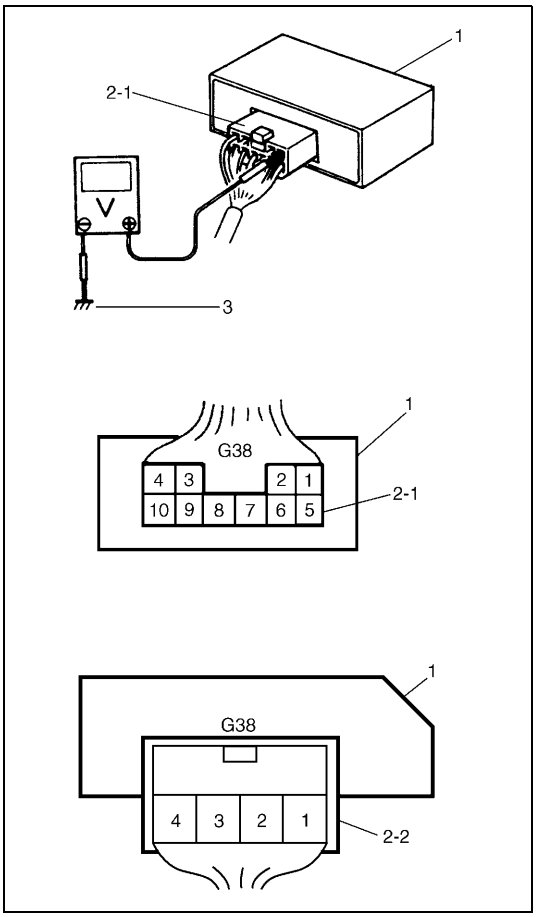

1.	Immobilizer Control Module
2-1.	Immobilizer Control Module coupler (Vehicle not equipped with air bag system)
2-2.	Immobilizer Control Module coupler (Vehicle equipped with air bag system)
3.	Body ground

<Vehicle not equipped with air bag system>

TERMINAL	CIRCUIT	NORMAL VOLTAGE	CONDITION
G38-1	Ignition signal	10 – 14V	Ignition switch ON
		0 – 0.8V	Ignition switch OFF
G38-2	Power source	10 – 14V	Ignition switch ON
G38-3	Coil antenna 2	0V	Ignition switch ON
G38-4	Coil antenna 1	0V	Ignition switch ON
G38-5 G38-6	Blank	–	–
G38-7	Data link connector (Serial data terminal)	4 – 5V	Ignition switch ON
G38-8	Ground	–	–
G38-9	Blank	–	–
G38-10	Diagnosis output	0 – 14V	Ignition switch ON
		0V	Ignition switch OFF

NOTE:

When measuring voltage at G38-4 and G38-3 terminals with ignition switch turned ON, be sure to turn ignition switch ON before connecting positive probe of voltmeter to G38-4 or G38-3 terminal. If it is not turned ON first, DTC13 (Diagnostic Trouble Code 13) may be indicated.

<Vehicle equipped with air bag system>

TERMINAL	CIRCUIT	NORMAL VOLTAGE	CONDITION
G38-1	Ground	–	–
G38-2	Data link connector (Serial data terminal)	4 – 5V	Ignition switch ON
G38-3	Ignition signal	10 – 14V	Ignition switch ON
		0 – 0.8V	Ignition switch OFF
G38-4	Power source	10 – 14V	Ignition switch ON

Resistance Check (Vehicle Not Equipped with Air Bag System)

1) Disconnect Immobilizer Control Module couplers from Immobilizer Control Module with ignition switch OFF.

CAUTION:

Never touch terminals of Immobilizer Control Module itself or connect voltmeter or ohmmeter.

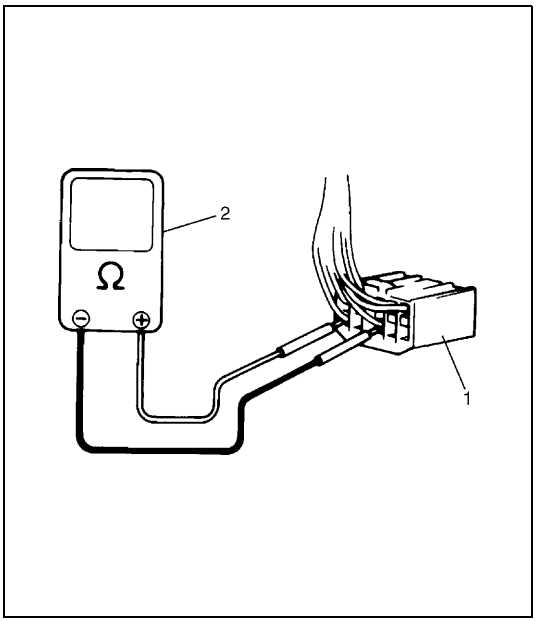

2) Check resistance between each terminal of couplers disconnected (1).

CAUTION:

- **Be sure to connect ohmmeter (2) probe from wire harness side of coupler.**
- **Be sure to turn OFF ignition switch for this check.**
- **Resistance in table below represents that when parts temperature is 20°C (68°F).**

TERMINAL	CIRCUIT	NORMAL RESISTANCE	CONDITION
G38-4 – G38-3	Coil antenna	Continuity	–

On-Vehicle Service

Precautions in Handling Immobilizer Control System

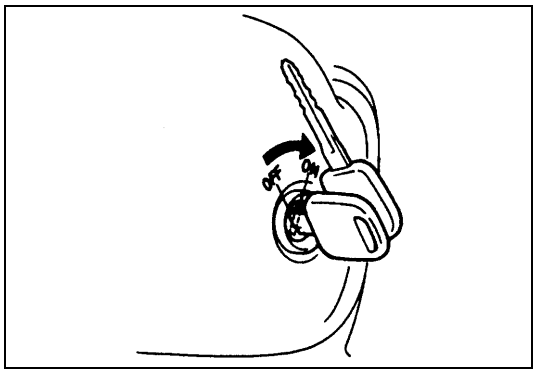

- Don't turn ON ignition switch with ignition key for immobilizer control system put together with another one or placed quite close to another one. Or the system may detect abnormal condition and prevent engine from starting.

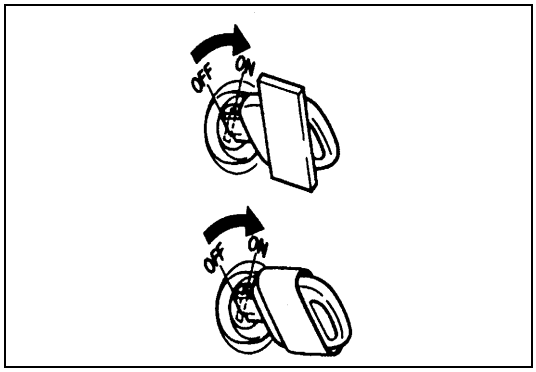

- Do not turn ON ignition switch by using ignition key with any type of metal wound around its grip or in contact with it. Or the system may detect abnormal condition and prevent engine from starting.

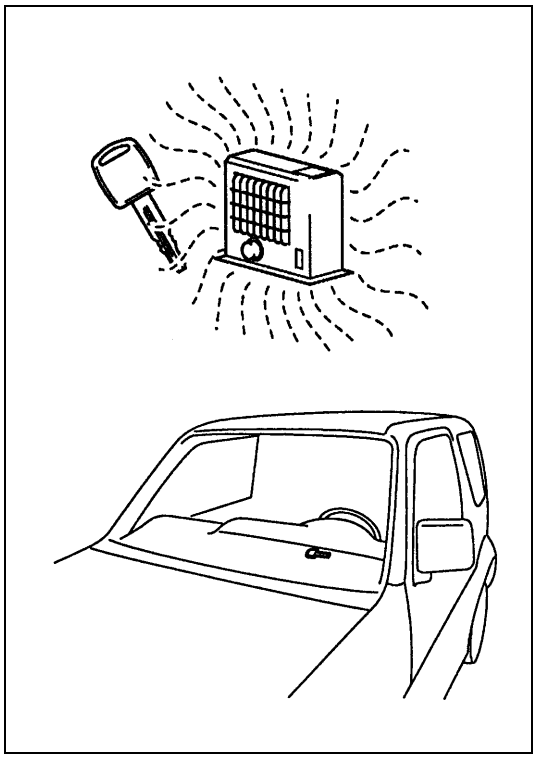

- Do not leave ignition key where high temperature is anticipated. High temperature will cause transponder in ignition key to be abnormal or damaged.

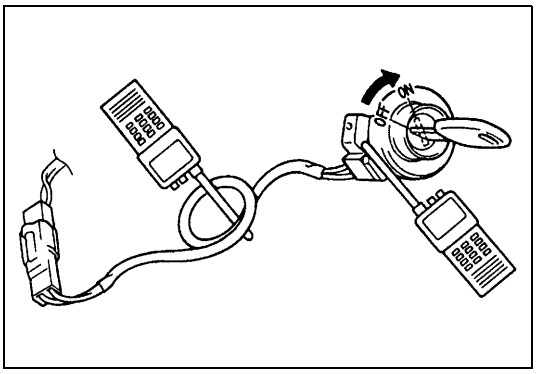

- Do not turn ON ignition switch with a radio antenna placed near coil antenna or its harness to Immobilizer Control Module. Or the system may detect abnormal condition and prevent engine from starting.

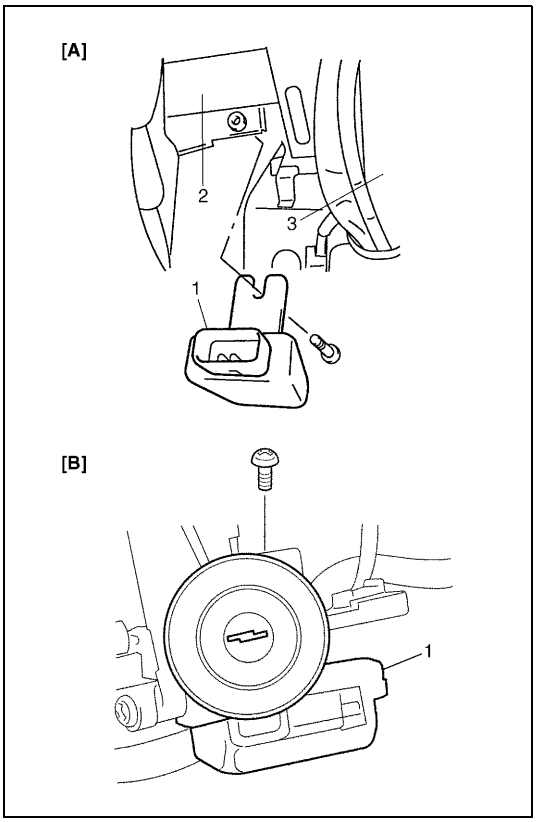

Immobilizer Control Module

REMOVAL

1) Disconnect negative (–) cable at battery.
2) Remove steering column hole cover.
3) [Vehicle equipped with air bag system]
   Remove steering column mounting bolts, then remove steering column upper and lower cover.
4) Disconnect coupler at Immobilizer Control Module.
5) Remove immobilizer control module (1).

2.	Steering support member
3.	Steering shaft
[A] :	For vehicle not equipped with air bag system
[B] :	For vehicle equipped with air bag system

INSTALLATION

Reverse removal procedure for installation.

NOTE:

After replacing Immobilizer Control Module, be sure to register Transponder code and ECM / Immobilizer Control Module code in Immobilizer Control Module and ECM / Immobilizer Control Module code in ECM by performing procedure described in "Procedure After Immobilizer Control Module Replacement" in this section.

Coil Antenna (Vehicle not equipped with air bag system)

REMOVAL

1) Disconnect negative (–) cable at battery.
2) Remove steering column hole cover.
3) Remove steering column upper and lower cover (1).

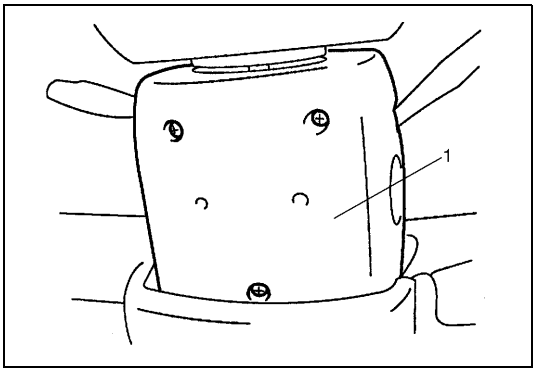

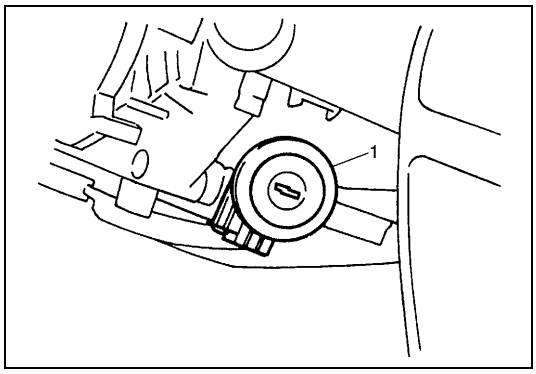

4) Remove coil antenna (1).

INSTALLATION

For installation, reverse removal procedure.

How to Register Ignition Key

Register the ignition key with a built-in transponder in Immobilizer Control Module by using the following procedure.

CAUTION:

When registering the ignition key including a transponder into the immobilizer control module by using Suzuki scan tool, confirm that the knob color of the ignition key to be registered for the vehicle with / without air bag system is as shown below. The ignition key with wrong knob color cannot be registered.

- **Knob color of ignition key for vehicle with air bag system: Dark gray**
- **Knob color of ignition key for vehicle without air bag system: Black**

1) Prepare SUZUKI scan tool and cartridge for immobilizer control system.

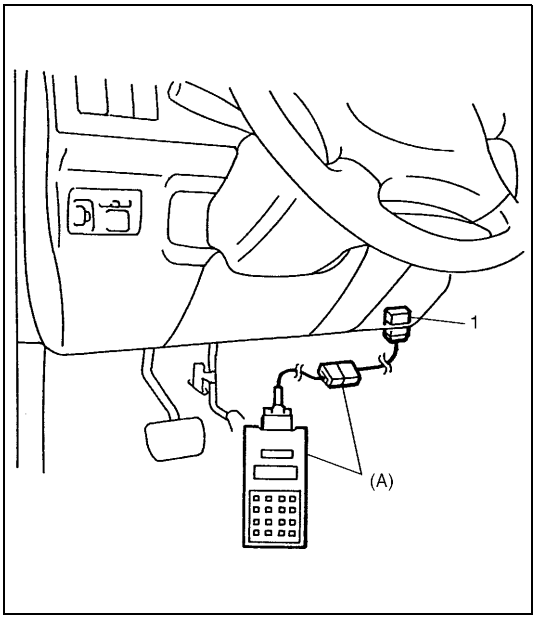

2) With ignition switch OFF, connect SUZUKI scan tool to data link connector (DLC) (1) located on underside of instrument panel at driver's seat side.

(A) : SUZUKI scan tool

NOTE:

For operation procedure of SUZUKI scan tool, refer to SUZUKI scan tool operator's manual.

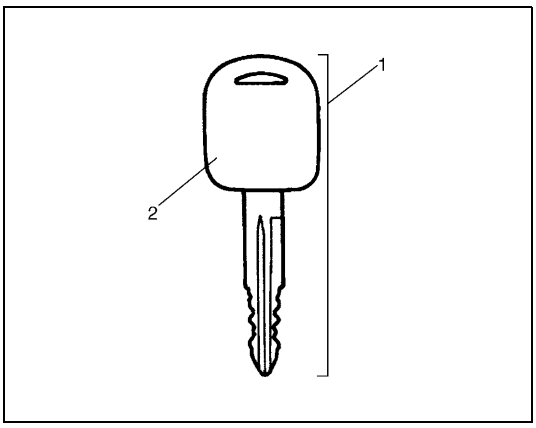

3) Prepare ignition key with a built-in transponder (1). And then turn ignition switch ON by using it.

2. Key knob

4) Number of Transponder codes for ignition key with a built-in transponder that can be registered in Immobilizer Control Module is limited to 4. If needed, clear all Transponder codes for ignition key with a built-in transponder that have been registered in Immobilizer Control Module by executing the "CLR. TRANS COD (CLEAR TP CODE)" command in the SELECT MODE menu by using SUZUKI scan tool.

NOTE:

When "CLR. TRANS COD (CLEAR TP CODE)" command is executed with the malfunction indicator lamp (if not equipped with immobilizer indicator lamp) ON or the immobilizer indicator lamp ON, it remains ON even after execution of that command is over. It will start flashing when the ignition switch is turned OFF once and then turned ON after some seconds.

5) Using SUZUKI scan tool, register Transponder code in Immobilizer Control Module by executing "ENT. TRANS COD (ENT. TP CODE)" command in SELECT MODE menu.
6) Make sure that following indicator lamp lights when ignition switch is turned OFF once and then turned ON.
   - Vehicle not equipped with immobilizer indicator lamp : malfunction indicator lamp (MIL).
   - Vehicle equipped with immobilizer indicator lamp : immobilizer indicator lamp.
7) If any other Transponder code for ignition key with a built-in transponder needs to be registered, repeat above steps 3), 5) and 6).

NOTE:

- **Up to 4 Transponder codes for ignition key with a built-in transponder can be registered.**
- **It is not possible to register the same Transponder code for ignition key with a built-in transponder as the one already registered in Immobilizer Control Module.**

Procedure After Immobilizer Control Module Replacement

When Immobilizer Control Module was replaced, including when replaced because rechecking by using a known-good Immobilizer Control Module was necessary during trouble diagnosis, register Transponder code and ECM / Immobilizer Control Module code in Immobilizer Control Module and ECM / Immobilizer Control Module code in ECM by performing following procedure.

CAUTION:

When registering the ignition key including a transponder into the immobilizer control module by using Suzuki scan tool, confirm that the knob color of the ignition key to be registered for the vehicle with / without air bag system is as shown below. The ignition key with wrong knob color cannot be registered.

- **Knob color of ignition key for vehicle with air bag system: Dark gray**
- **Knob color of ignition key for vehicle without air bag system: Black**

1) Perform steps 1) and 2) described in "How To Register Ignition Key" in this section.
2) Prepare ignition key with a built-in transponder. And then turn ignition switch ON by using it.
3) Using SUZUKI scan tool, clear all transponder codes registered in Immobilizer Control Module by executing "CLR. TRANS COD (CLEAR TP CODE)" command in SELECT MODE menu.

NOTE:

When "CLR. TRANS COD (CLEAR TP CODE)" command is executed with the malfunction indicator lamp (if not equipped with immobilizer indicator lamp) ON or the immobilizer indicator lamp ON, it remains ON even after execution of that command is over. It will start flashing when the ignition switch is turned OFF once and then turned ON after some seconds.

4) Using SUZUKI scan tool, register Transponder code in Immobilizer Control Module by executing "ENT. TRANS COD (ENT. TP CODE)" command in SELECT MODE menu.
5) Using SUZUKI scan tool, register ECM / Immobilizer Control Module code in both Immobilizer Control Module and ECM by executing "RECORD ECU (RECORD ECM/PCM/ICM)" command in SELECT MODE menu.
6) Make sure that following indicator lamp lights when ignition switch is turned OFF once and then turned ON.
   - Vehicle not equipped with immobilizer indicator lamp : malfunction indicator lamp (MIL).
   - Vehicle equipped with immobilizer indicator lamp : immobilizer indicator lamp.
7) If any other Transponder code for ignition key with a built-in transponder needs to be registered, repeat above steps 2), 4) and 6).

NOTE:

- **Up to 4 Transponder codes for ignition key with a built-in transponder can be registered.**
- **It is not possible to register the same Transponder code for ignition key with a built-in transponder as the one already registered in Immobilizer Control Module.**

Procedure After ECM Replacement

When ECM was replaced, including when replaced because rechecking by using a known-good ECM was necessary during trouble diagnosis, register ECM / Immobilizer Control Module code in ECM by performing following procedure.

1) Perform steps 1) and 2) described in "How To Register Ignition Key" in this section. And then turn ignition switch ON.
2) Using SUZUKI scan tool, register ECM / Immobilizer Control Module code in ECM by executing "RECORD ECU (RECORD ECM / ICM)" command in SELECT MODE menu.

NOTE:

For operation procedure of SUZUKI scan tool, refer to SUZUKI scan tool operator's manual.

3) Make sure that following indicator lamp lights when ignition switch is turned OFF once and then turned ON.
   - Vehicle not equipped with immobilizer indicator lamp : malfunction indicator lamp (MIL).
   - Vehicle equipped with immobilizer indicator lamp : immobilizer indicator lamp.

Special Tools

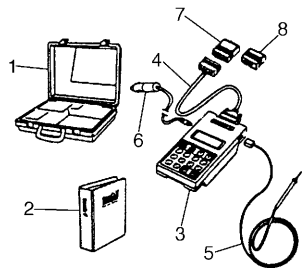 09931-76011 Tech 1A kit (SUZUKI scan tool) See NOTE “A” below.	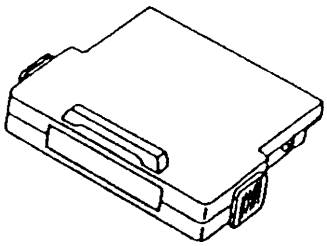 Immobilizer cartridge of version 1.1 or more	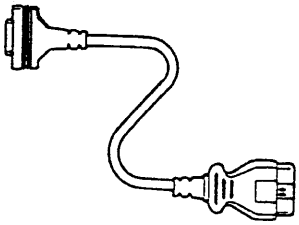 09931-76030 16/14 pin DLC cable	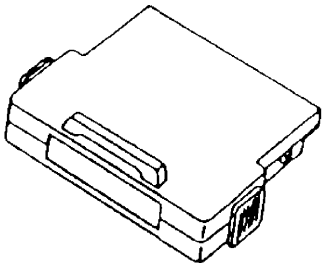 Mass storage cartridge of version 1.5 or more
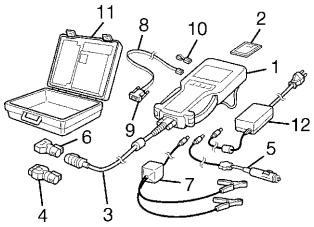 Tech 2 kit (SUZUKI scan tool) See NOTE “B” below.			

NOTE:

- **“A” : This kit includes the following items and substitutes for the Tech 2 kit.**
  1. Storage case, 2. Operator’s manual, 3. Tech 1A, 4. DLC cable, 5. Test lead/probe, 6. Power source cable, 7. DLC cable adaptor, 8. Self-test adaptor
- **“B” : This kit includes the following items and substitutes for the Tech 1 kit.**
  1. Tech 2, 2. PCMCIA card, 3. DLC cable, 4. SAE16/19 adapter, 5 Cigarette cable, 6. DLC loopback adapter, 7. Battery power cable, 8. RS232 cable, 9. RS232 adapter, 10. RS232 loopback connector, 11. Storage case, 12. Power supply

SECTION 9

BODY SERVICE

WARNING:

For vehicles equipped with Supplemental Restraint (Air Bag) System:

- **Service on and around the air bag system components or wiring must be performed only by an authorized SUZUKI dealer. Refer to "Air Bag System Components and Wiring Location View" under "General Description" in air bag system section in order to confirm whether you are performing service on or near the air bag system components or wiring. Please observe all WARNINGS and "Service Precautions" under "On-Vehicle Service" in air bag system section before performing service on or around the air bag system components or wiring. Failure to follow WARNINGS could result in unintentional activation of the system or could render the system inoperative. Either of these two conditions may result in severe injury.**
- **Technical service work must be started at least 90 seconds after the ignition switch is turned to the "LOCK" position and the negative cable is disconnected from the battery. Otherwise, the system may be activated by reserve energy in the Sensing and Diagnostic Module (SDM).**
- **When servicing vehicle body, if shock may be applied to air bag system component parts, remove those parts beforehand. (Refer to Section 10B.)**

NOTE:

Fasteners are important attaching parts in that they could affect the performance of vital components and systems, and/or could result in major repair expense. They must be replaced with one of the same part number of with an equivalent part if replacement becomes necessary.
Do not use a replacement part of lesser quality or substitute a design. Torque values must be used as specified during reassembly to assure proper retention of these parts.

CONTENTS

Glass and Windows 9-2
Front Door Glass 9-2
Front Door Window Regulator 9-5
Windowshield 9-6
Quarter Window 9-11
Back Door Glass 9-12
Body Structure 9-13
Front Door Assembly 9-13
Back Door Assembly 9-15
Under Body Dimensions 9-17
Body Dimensions 9-19
Instrumentation and Driver Information 9-22
Instrument Panel 9-22
Seats 9-23
Front Seat 9-23
Rear Seat 9-24
Paint and Coatings 9-25
Anti-Corrosion Treatment 9-25
Metal Replacement Parts Finishing 9-26
Security and Locks 9-34
Front Door Lock Assembly 9-34
Back Door Lock Assembly 9-36
Exterior and Interior Trim 9-37
Splash Guard 9-37
Roof Rail (If Equipped) 9-37
Tightening Torque Specification 9-38

Glass and Windows

Front Door Glass

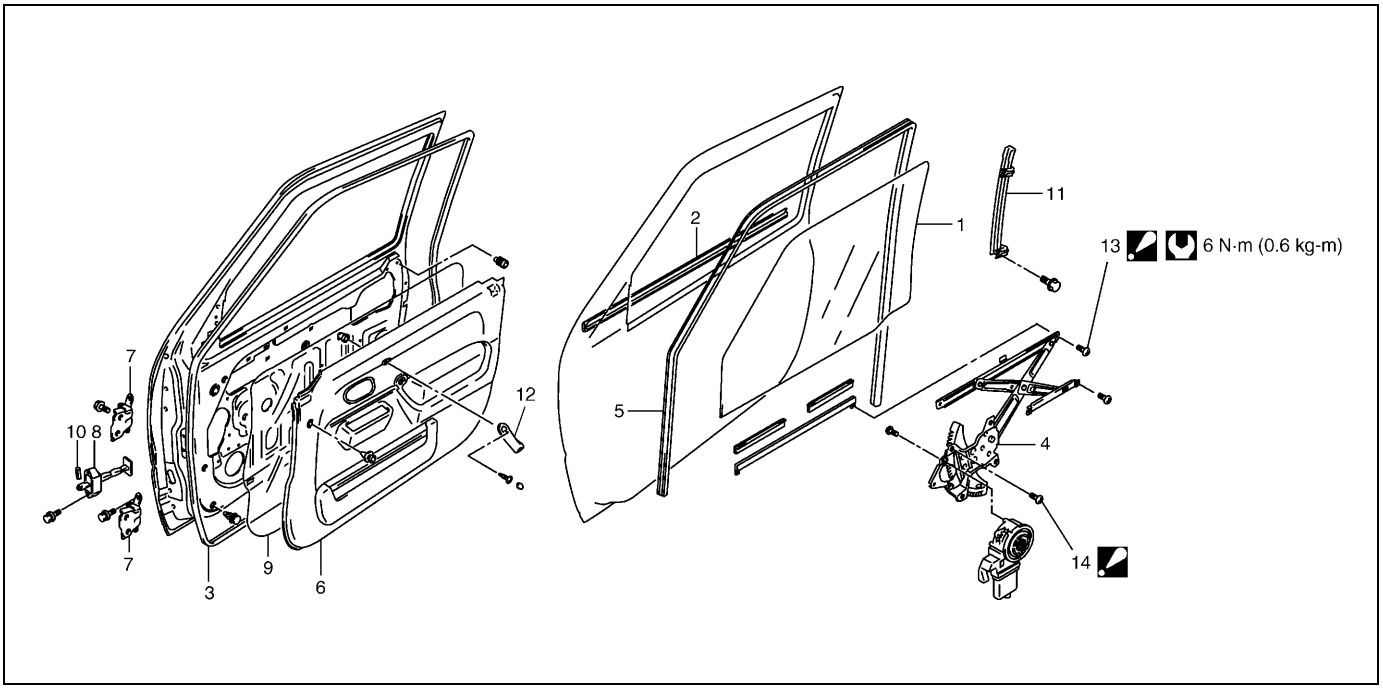

1. Door glass	6. Door trim	11. Door sash
2. Out side weatherstrip	7. Door hinge	12. Door grip
3. Opening weatherstrip	8. Door open stopper	13. Door glass attaching screw : Tighten rear screw first, and then tighten front screw.
4. Window regulator	9. Door sealing cover	14. Window regulator mounting screw : Tighten proper procedure referring to “Front Door Window Regulator”.
5. Glass run	10. Door open stopper pin	Tightening torque

REMOVAL

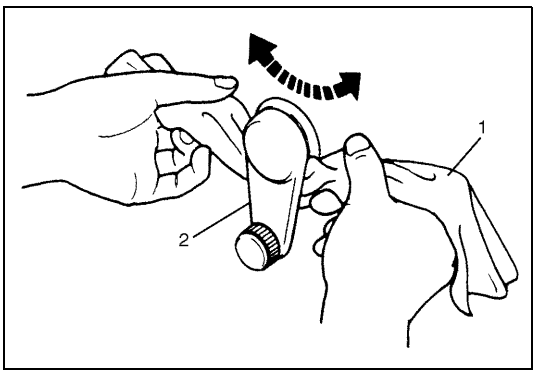

1) Remove window regulator handle (2) (if equipped).
   For its removal, pull off snap by using a cloth (1) as shown in the figure.

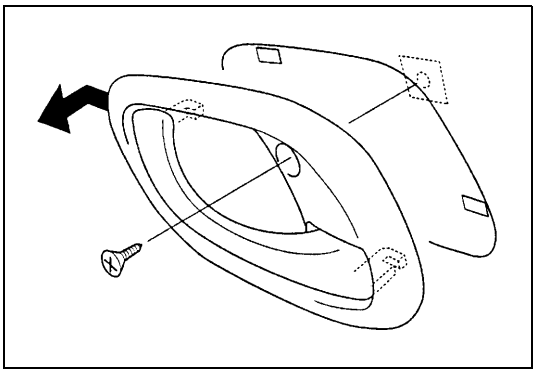

2) Remove inside handle bezel.
3) Remove door inner garnish.
4) Remove inside lock knob and door grip fitting screw.

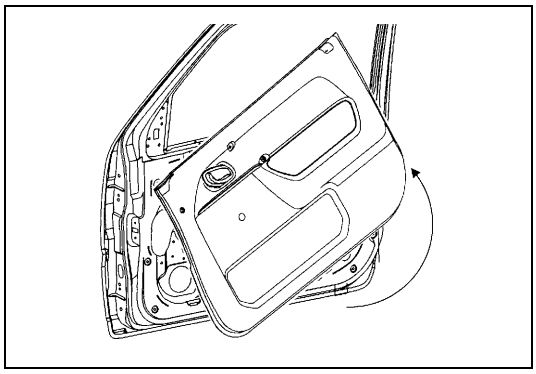

5) Remove door trim.
   With inside handle bezel tilted as shown in figure, turn door trim 90° counterclockwise to remove it.
   And disconnect power window switch lead wire at coupler (if equipped).

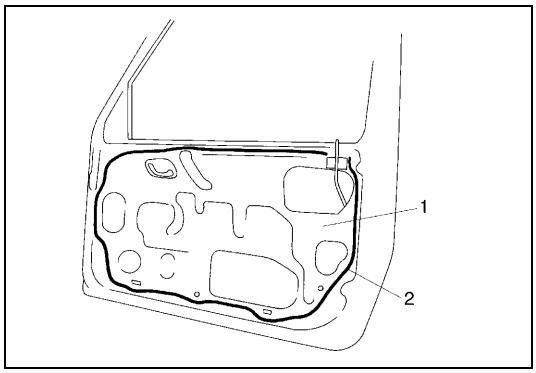

6) Remove door sealing cover (1).

2. Adhesive

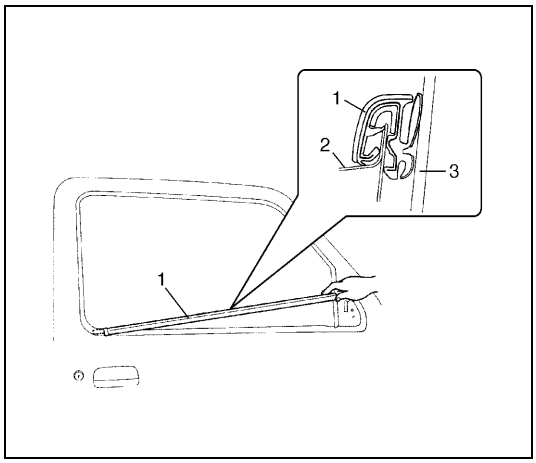

7) Remove door mirror.
8) Remove door outside weatherstrip (1).
   Lower window all the way down. Then, use a tape-wrapped putty knife (or screwdriver) to pry off weatherstrip.

CAUTION:

Use a tape-wrapped putty knife (or screwdriver) to pry off weatherstrip. Use of an unwrapped tool will cause damage to painting.

2. Door panel
3. Door glass

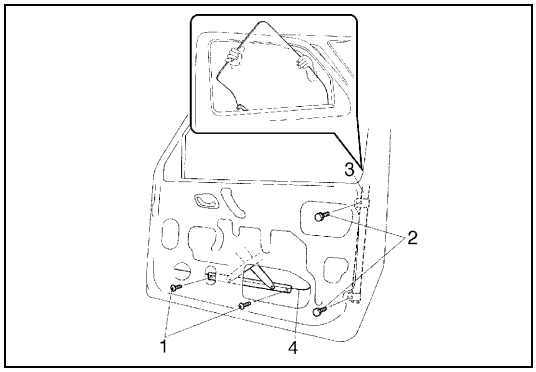

9) Remove door sash (3) mounting bolts (2).
10) Remove glass attaching screws (1).
11) Take out door glass (4).

INSTALLATION

Reverse removal procedure to install door glass noting following points:

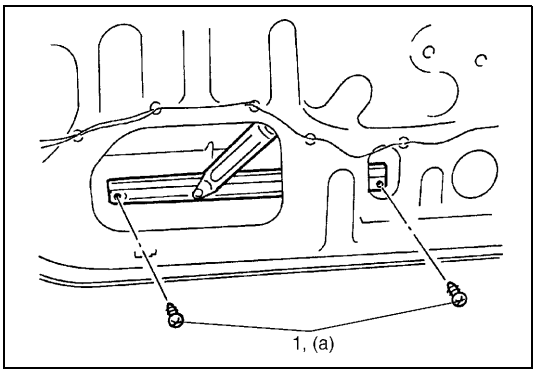

- Tighten glass attaching screws (1) to specified torque. Tighten rear screw first, then front screw.

Tightening torque
Front door glass attaching screws
(a): 6 N·m (0.6 kg-m, 4.3 lb-ft)

- When window becomes hard to raise and lower, adjust screws to correct tilted glass as shown in figure.

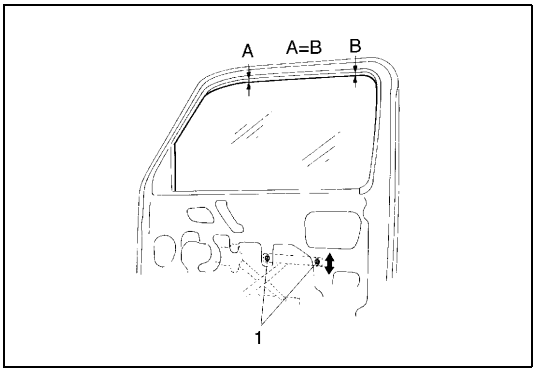

- Adjust equalizer of window regulator so that measurement A and B are equal.

1. Screws

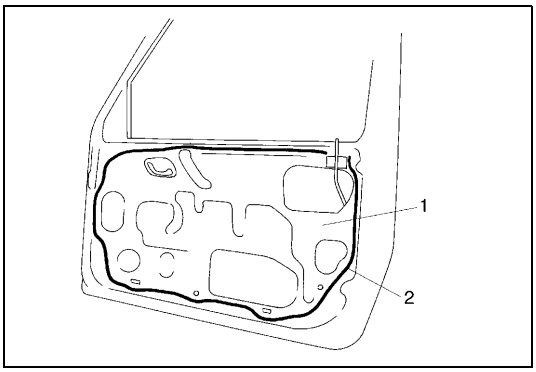

- Secure door sealing cover (1) with adhesive (2).

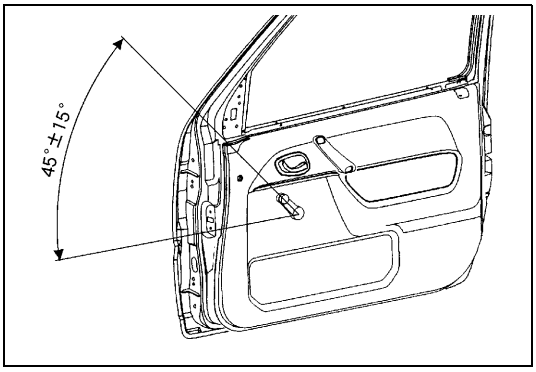

- Install door window regulator handle so that it has a 45° angle when glass is fully closed, as shown in the figure.

Front Door Window Regulator

REMOVAL

1) Remove door glass, referring to steps 1) to 11) of “REMOVAL” under “Front Door Glass” in this section.
2) Disconnect power window motor lead wire at coupler and loosen clamp.
3) Loosen regulator mounting screws (1) and take out regulator through hole (2) as shown in the figure.

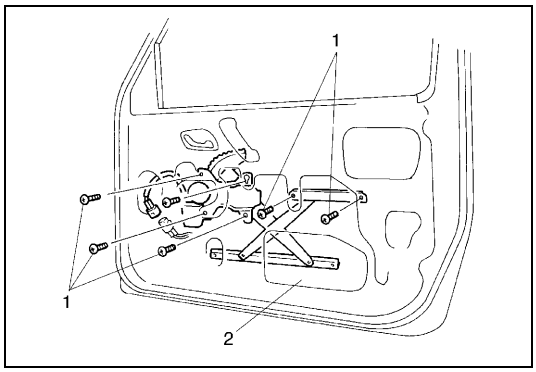

INSPECTION

1) Check regulator sliding and rotating parts for greasing.
2) Check rollers for wear and damage.
3) Check wire for damage.

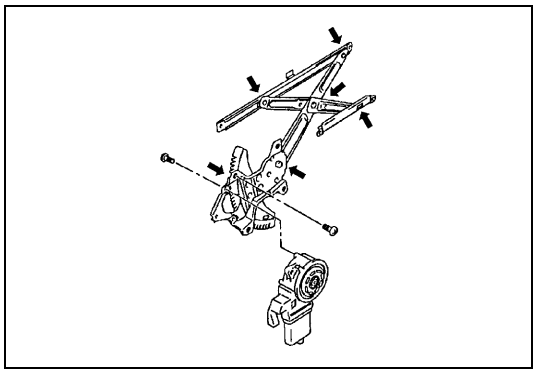

INSTALLATION

Reverse removal procedure to install window regulator noting following point.

- Tighten screws according to the order (a, b, c, d , 1, 2) shown in the figure.
- When installing glass, check that the top part of the glass contacts the glass run evenly and that the glass moves up and down smoothly.
  If the glass is tilted with respect to the glass run, make a fine adjustment with the screws. Refer to “Front Door Glass” in this section.

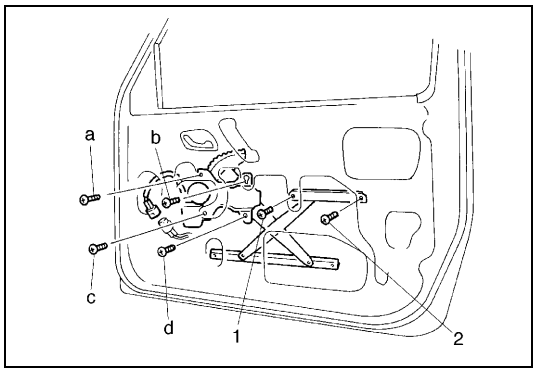

Windowshield

The front windshield is installed by using a special type of adhesive (that is, one component urethane adhesive used with primer). For the Windshield replacement, it is important to use an adhesive which provides sufficient adhesion strength and the follow the proper procedure.

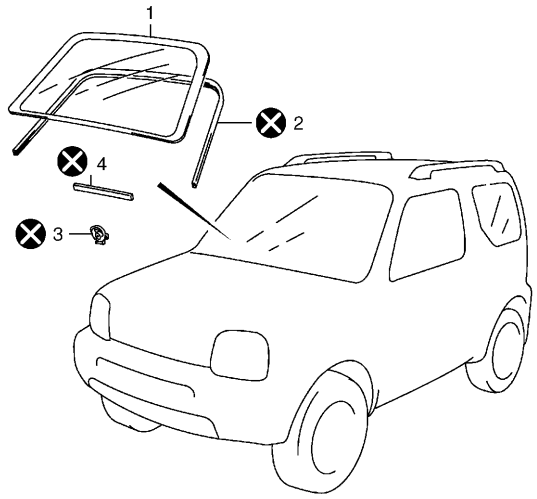

1. Windshield glass	3. Stopper	⊗ Do not reuse.
2. Windshield molding	4. Spacer	

CAUTION:

- **Described in this section is the glass replacement by using 3 types of primers and 1 type of adhesive made by YOKOHAMA (one component urethane adhesive to be used with primer in combination). When using primer and adhesive made by other manufacturers, be sure to refer to handling instructions supplied with them. Negligence in following such procedure or misuse of the adhesive in any way hinders its inherent adhesive property. Therefore, before the work, make sure to read carefully the instruction and description given by the maker of the adhesive to be used and be sure to follow the procedure and observe each precaution throughout the work.**
- **Should coated surface be scratched or otherwise damaged, be sure to repair damaged part, or corrosion may start from there.**

Use an adhesive of above mentioned type which has following property.

Glass adhesive shearing strength

: 40 kg/cm^2 (569 lb/in^2) or more

Adhesive materials and tools required for removal and installation.

- One component urethane adhesive and primers used in combination (For one sheet of windshield).
  - Adhesive (470 g (15.7 oz.))
  - Primer for glass (30 g (1.0 oz.))
  - Primer for body (30 g (1.0 oz.))
  - Primer for molding (30 g (1.0 oz.))
- Eyeleteer
- Piano string
- Windshield knife
- Brush for primer application (2 pcs)
- Knife
- Rubber sucker grip
- Sealant gun (for filling adhesive)
- Putty spatula (for correcting adhered parts)

REMOVAL

1) Clean both inside and outside of glass and around it.
2) Remove wiper arms and garnish.
3) Using tape, cover body surface around glass to prevent any damage.
4) Remove rear view mirror, sunvisor, and front pillar trims (right & left).
5) If necessary, remove instrument panel. Refer to “Instrument Panel” in this section.
6) If necessary, remove head lining.
7) Remove (or cut) windshield molding all around until windshield edge comes out.

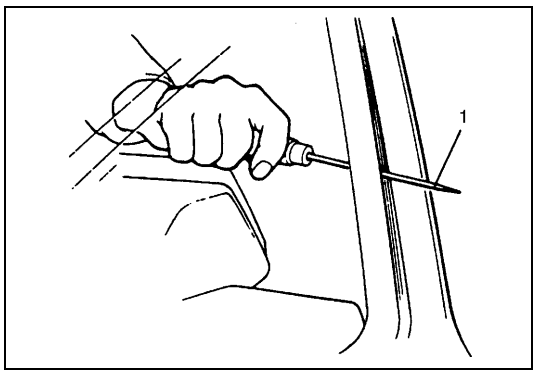

8) Drill hole with eyeleteer (1) through adhesive and let piano string through it.

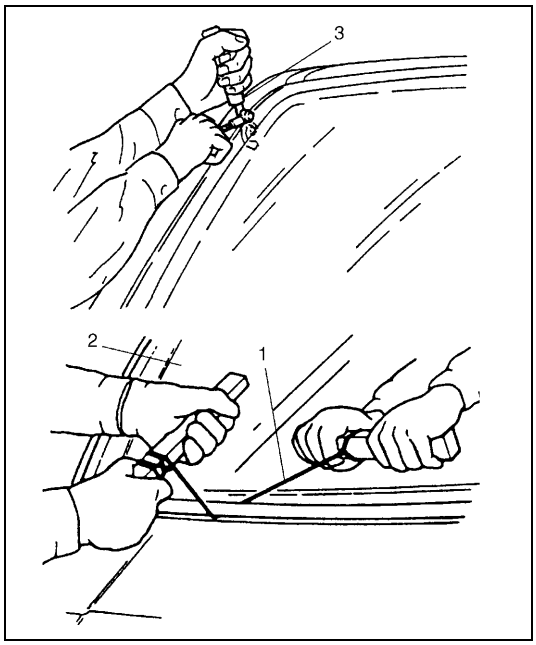

9) Cut adhesive all around windshield (2) with piano string (1). When using tool to cut adhesive, be careful not to cause damage to windshield. Use wire to cut adhesive along lower part of windshield.

NOTE:

Use piano string as close to glass as possible so as to prevent damage to body and instrument panel.

3. Windshield knife

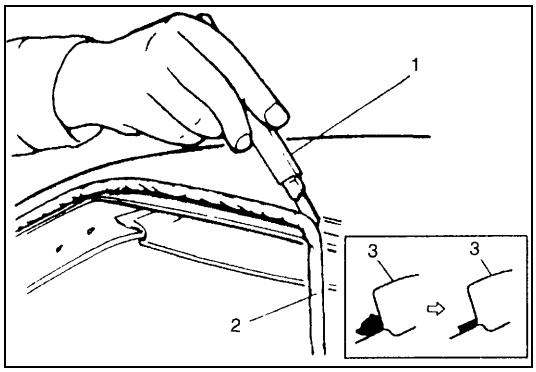

10) Using knife (1), smoothen adhesive (2) remaining on body (3) side so that it is 1 to 2 mm thick all around.

NOTE:

Before using knife, clean knife with alcohol or the like to remove oil.

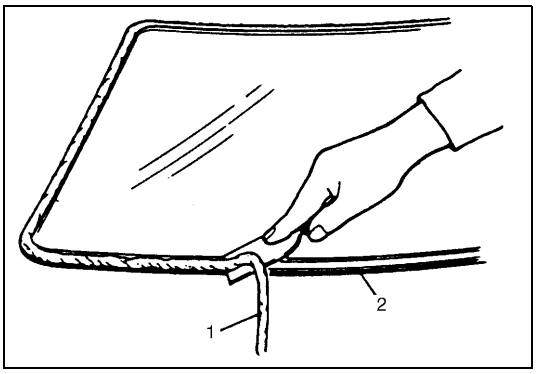

11) When reusing windshield, remove the adhesive (1) from the windshield using care not to damage primer coated surface (2).

INSTALLATION

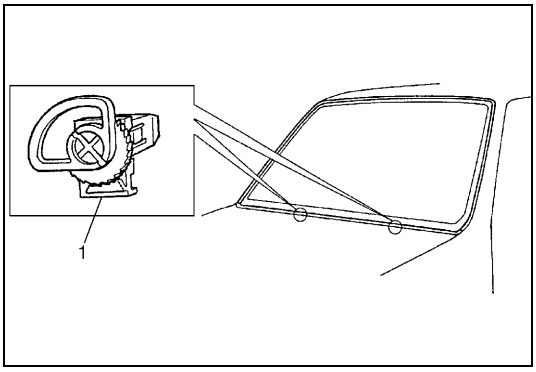

1) Using cleaning solvent, clean windshield edge where windshield glass is to be adhered. (Let it dry for more than 10 minutes.)
2) Install new glass stoppers (1) (2pcs) to lower side of windshield.

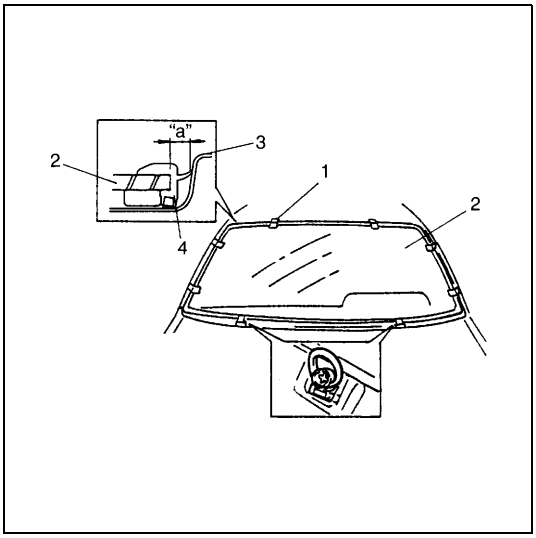

3) To determine installing position of glass (2) to body (3), position glass against body so that clearance between upper end of glass and body is about 5 mm (0.197 in.) and clearances between each side end (right & left) of glass and body are even. Place glass so that lug of fastener is matched with cut in body and fit fastener. Then mark mating marks (1) on glass and body as shown.
   Upper clearance can be adjusted by moving stoppers position.

Windshield clearance
"a": Approx. 5 mm (0.197 in.)

4. Molding

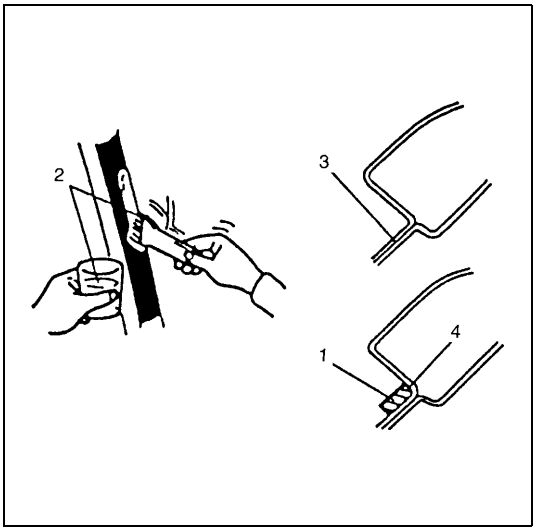

4) Clean contact surfaces of old adhesive (4), paint or bare metal thoroughly.
   If surfaces of paint or bare metal come out, apply primer (2) for body with caution not to apply primer to surface of adhesive remaining on body.

NOTE:

- **Be sure to refer to primer maker's instruction for proper handling and drying time.**
- **Do not touch body and old adhesive surfaces where glass is to be adhered.**

1. Do not apply primer
3. Apply primer

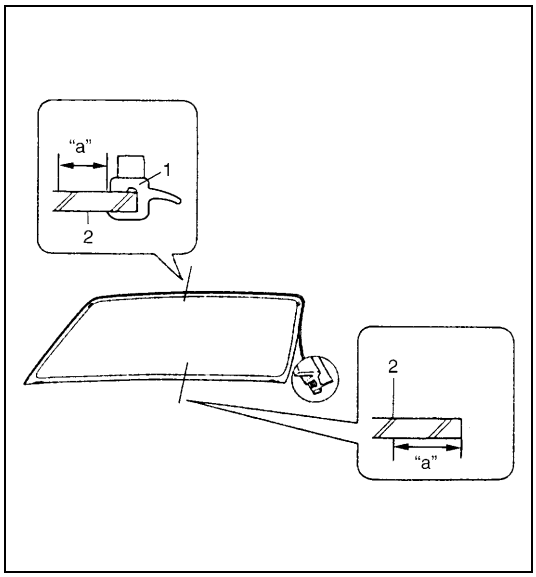

5) Install new molding (1) to glass (2).
6) Clean glass surface to be adhered to body with clean cloth. If cleaning solvent is used, let it dry for more than 10 minutes.

Cleaning area for distance from the edge of glass or molding
"a": 30 – 50 mm (1.18 – 1.97 in.)

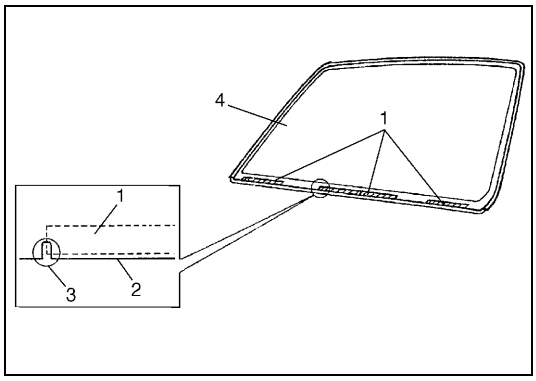

7) Install new spacer (1) to glass (4).

2.	Ceramic printing
3.	Cutting section of ceramic printing

8) Using new brush, apply sufficient amount of primer for glass along glass surface to be adhered to body.

NOTE:

- **Be sure to refer to maker's instruction for proper handling and drying time.**
- **Do not apply primer on outside of ceramic coated surface.**
- **Do not touch primer coated surface.**
- **Width "b": 15 mm (0.59 in.)**

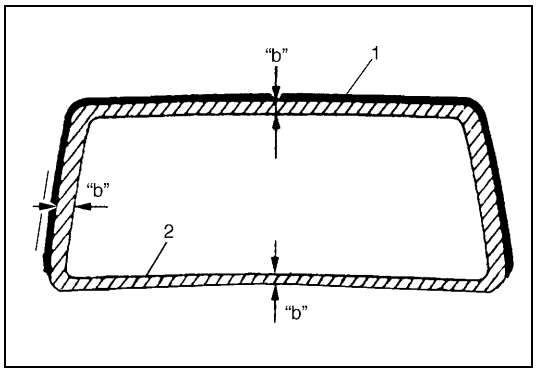

9) Apply primer for molding (1) along molding surface all around as shown in figure.

Width applied primer for windshield
"b": 15 mm (0.59 in.)

2.	Fastener

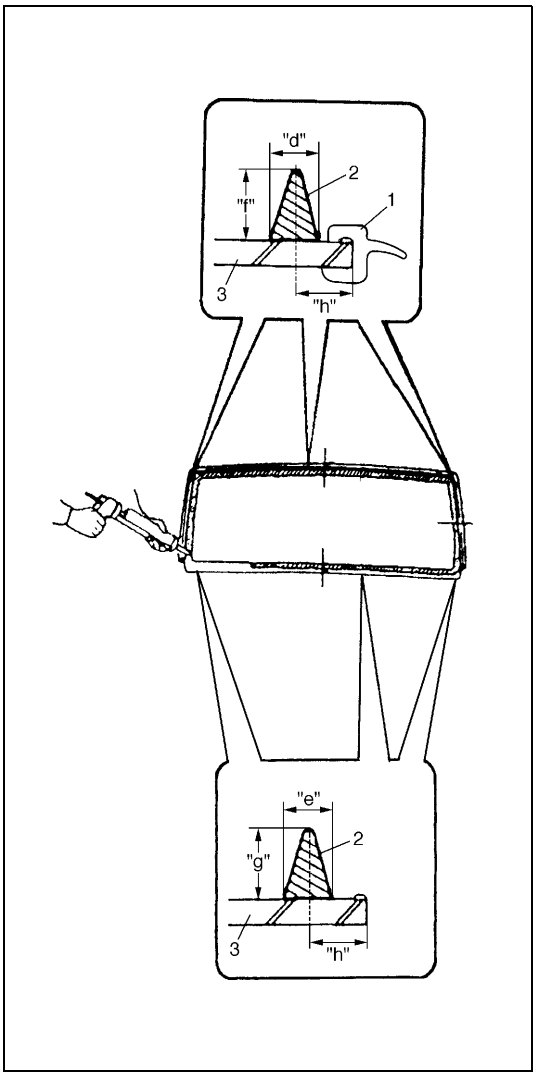

10) Apply adhesive referring to the figure.

NOTE:

- **Start from bottom side of glass.**
- **Be careful not to damage primer.**
- **Height of adhesive applied to lower side should be higher than that of other three sides.**
- **Upper, right and left sides**
- **Press glass against body quickly after adhesive is applied.**
- **Use of rubber sucker grip is helpful to hold and carry glass after adhesive is applied.**
- **Perform steps 8) to 9) within 10 min. to ensure sufficient adhesion.**
- **Be sure to refer to adhesive maker's instruction for proper handling and drying time.**

Adhesive amount specifications and position for windshield
Width "d": Approx. 8 mm (0.31 in.)
Width "e": Approx. 9 mm (0.35 in.)
Height "f": Approx. 15 mm (0.59 in.)
Height "g": Approx. 17 mm (0.67 in.)
Distance "h": Approx. 10.5 mm (0.41 in.)

1.	Molding
2.	Adhesive
3.	Glass

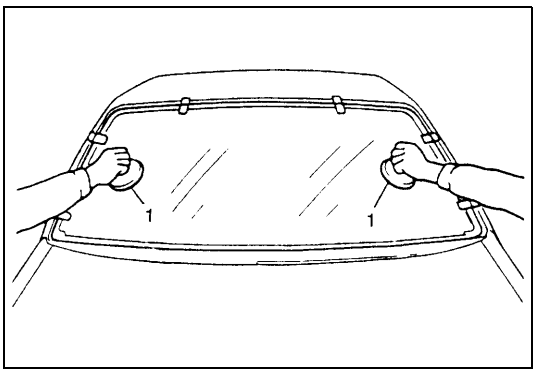

11) Holding rubber sucker grips (1), place glass onto body by aligning mating marks marked in step 3) and press it.

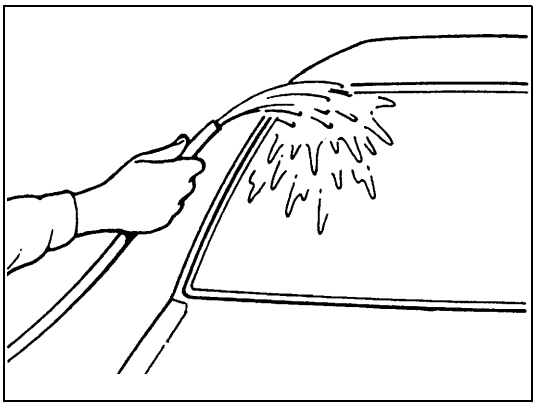

12) Check for water leakage by pouring water over windshield through hose. If leakage is found, dry windshield and fill leaky point with adhesive. If water still leaks even after that, remove glass and start installation procedure all over again.

NOTE:

- **Do not use high pressure water.**
- **Do not blow compressed air directly at adhesive applied part when drying.**
- **Do not use infrared lamp or like for drying.**

CAUTION:

Upon completion of installation, note the following.

- **Sudden closing of door before adhesive is completely set may cause glass to become loose or to come off. Therefore, if door is opened or closed before adhesive is completely set, make sure to open all door glasses and use proper care.**
- **If molding is not securely in place, hold it down with a tape until adhesive is completely set.**
- **Each adhesive has its own setting time.**
  Be sure to refer to its maker's instruction, check setting time of adhesive to be used and observe precautions to be taken before adhesive is set.
- **Refrain from driving till adhesive is completely set so as to ensure proper and sufficient adhesion.**

Quarter Window

REMOVAL AND INSTALLATION

Refer to "Windshield" section as removal and installation procedures are basically the same. However, note the following.

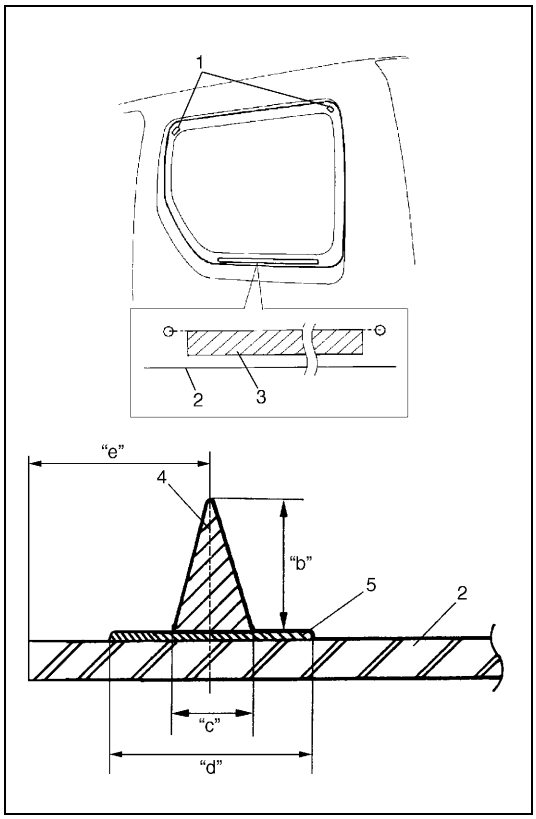

NOTE:

- **Observe following precautions when applying adhesive (4) along glass edge.**
  - **Adhesive should be applied evenly especially in height.**
  - **Be careful not to damage primer (5).**
  - **Press glass (2) against body quickly after adhesive is applied.**

Adhesive amount specification and position for quarter window
Height "b": 15 mm (0.59 in.)
Width "d": 15 mm (0.59 in.)
Width "c": 6 mm (0.23 in.)
Distance "e": 17 mm (0.67 in.) for glass lower section and rear section
Distance "e": 12 mm (0.47 in.) for glass upper section.
Distance "e": 14 mm (0.55 in.) for glass front section.

1.	Pin
3.	Double face tape

Back Door Glass

REMOVAL

1) Remover rear wiper arm.
2) Disconnect rear defogger coupler.

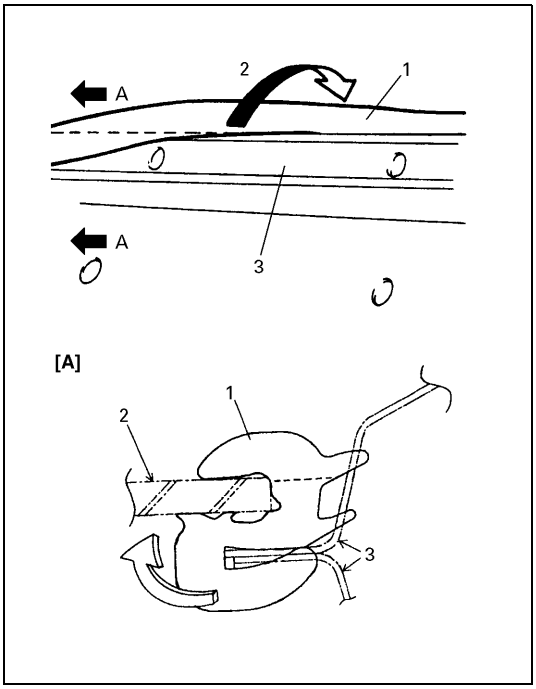

3) As rear window shield is fixed by means of back door window weatherstrip (1), remove glass (2) and weatherstrip together by removing end of weatherstrip little by little while pushing the entire glass from inside toward outside as shown in figure.

NOTE:

Do not apply an excessive force to glass locally.

3.	Back door panel
[A]:	Viewed A

INSTALLATION

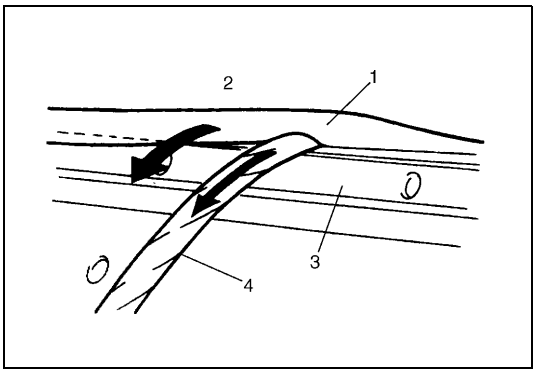

1) Install weatherstrip (1) to glass (2).
2) Pass string (4) through outer groove of weatherstrip (groove where back door panel (3) fits in) so that weatherstrip can be installed to back door.
3) Apply soap water to outer edge of back door panel and install glass and weatherstrip together to back door by pulling the string little by little.
4) Connect rear defogger coupler.
5) Install rear wiper arm.

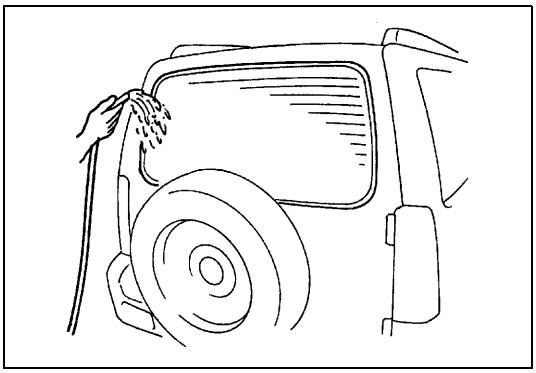

6) Check for water leakage by running water from hose over window. If leakage is found, complete the installation of leaky point. If water still leaks even after that, remove glass and start installation procedure all over again.

NOTE:

Do not use high pressure water.

Body Structure

Front Door Assembly

REMOVAL

1) Remove front fender.
2) Disconnect door harness lead wires at each coupler.
3) Remove stopper pin (1).

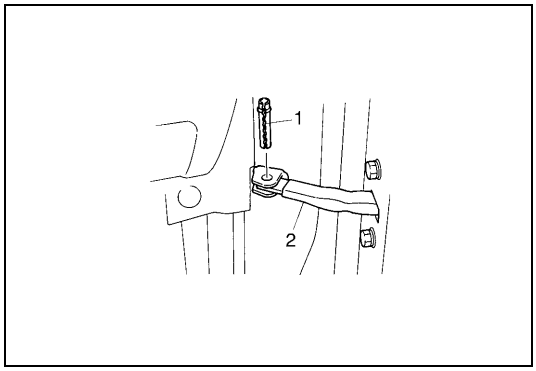

2.	Door open stopper

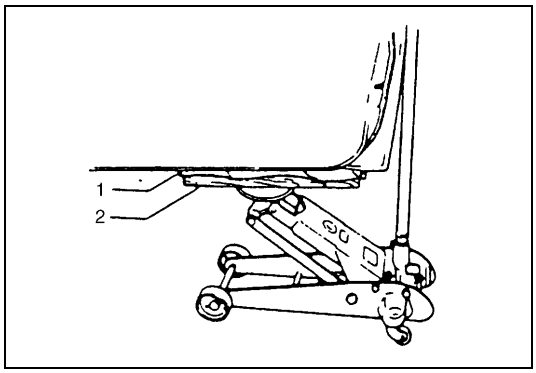

4) Support door panel using a jack with a piece of wood placed between jack and panel, as shown.

1.	Rags
2.	Wooden piece

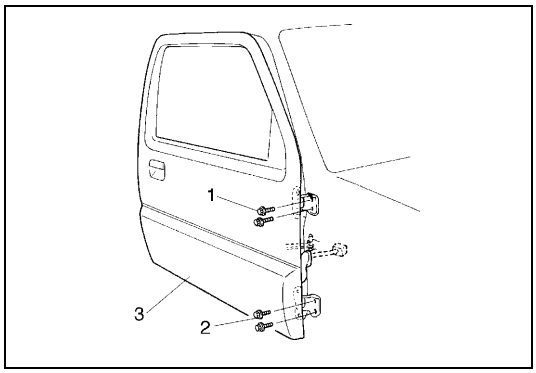

5) Remove door assembly (3) by loosening hinge mounting bolts.

1.	Upper hinge mounting bolts
2.	Lower hinge mounting bolt

INSTALLATION

Reverse removal procedure to install door assembly noting following points.

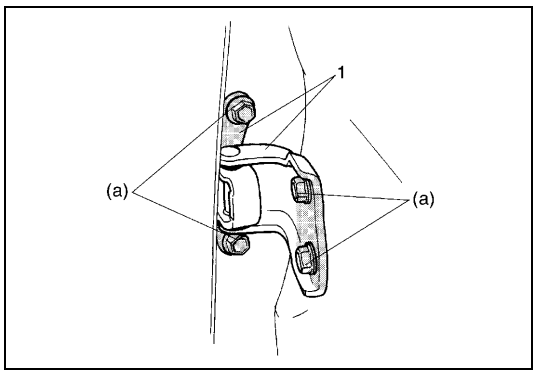

NOTE:

When replacing door, coat replacement door inside (1) with wax for proper anticorrosion treatment.
Refer to "Undercoating / Anti-Corrosion Compound Application Area" in this section.

- Tighten door hinge bolts to specified torque.

Tightening torque
Front door hinge bolts (a): 27 N·m (2.7 kg-m, 19.5 lb-ft)

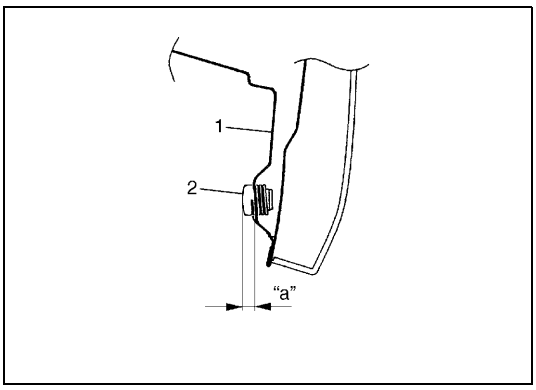

- Adjust door latch striker position by referring to “Front Door Lock Assembly” in this section so that door is positioned correctly.
- Adjust front door cushion (2) so that door (1) contacts body when closed as shown in the figure.

Front door cushion position
“a”: 7 mm (0.3 in.)

- After installation, open and close the door to check looseness. Replace door open stopper pin when there is looseness.
- When weatherstrip is hardened, water leak may develop. In such case, replace it with new one.

Back Door Assembly

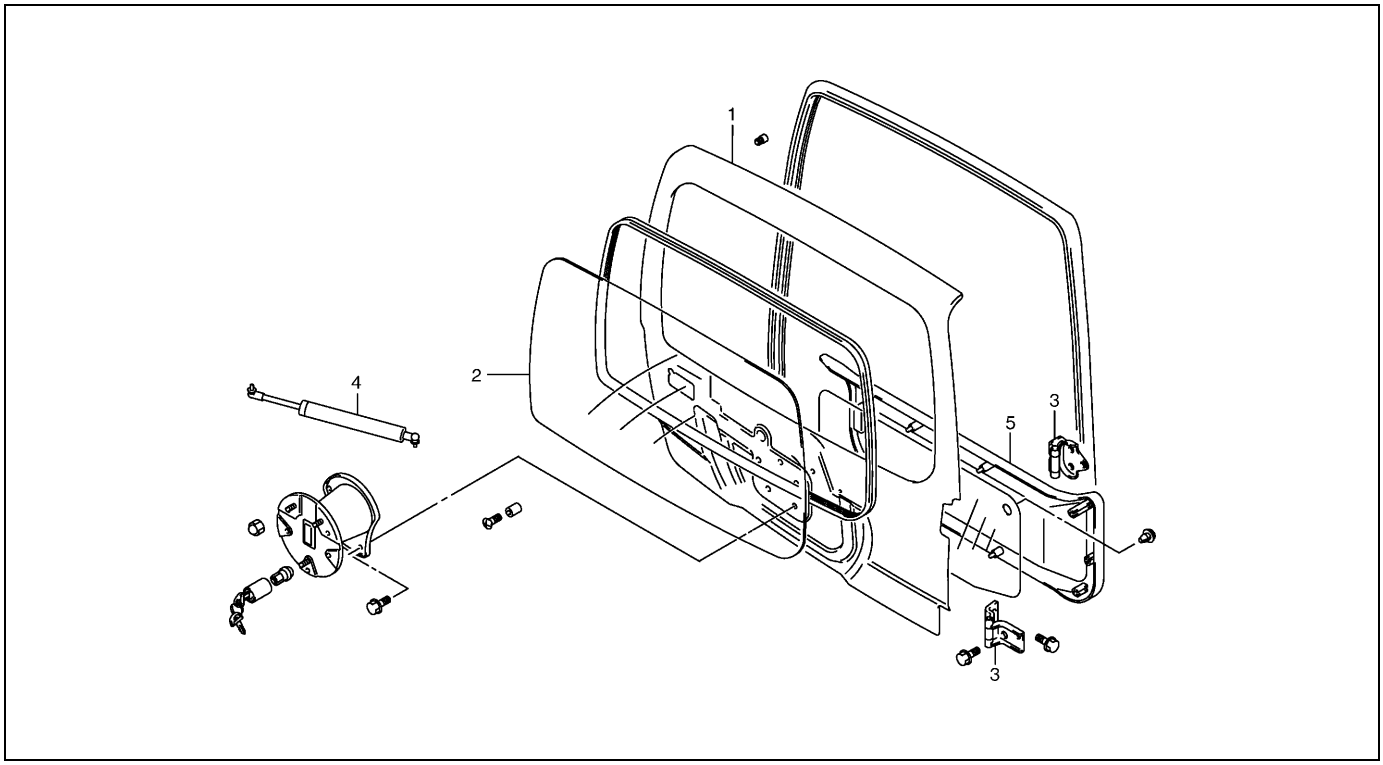

1. Back door panel assy	3. Back door hinge	5. Back door trim
2. Back door window glass	4. Back door balancer unit	

REMOVAL

1) Remove back door trim, and door sealing cover, refer to steps 1) to 3) of “REMOVAL” under “Back Door Lock Assembly” in this section.
2) Remove wire harness connector inside the back door.
3) Remove back door balancer (1) (first at its door-side and next at its body-side), as shown.

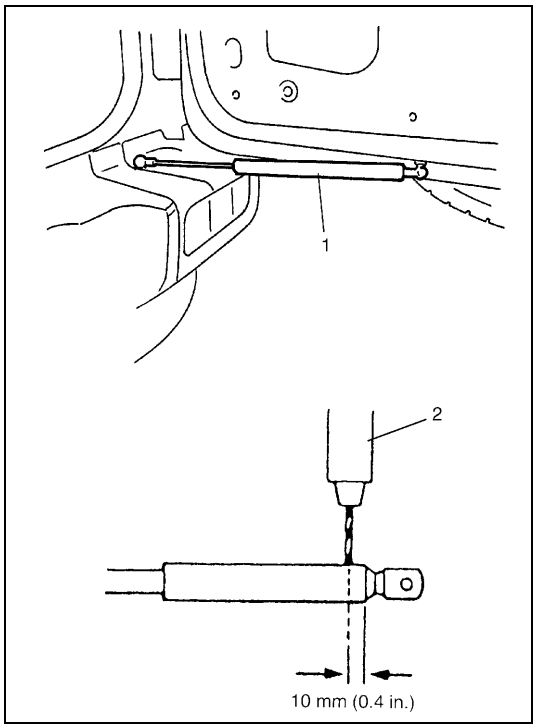

WARNING:

Handling of Back Door Balancer (Damper)

- **Handle balancer carefully. Do not scar or scratch exposed surface of its piston rod, and never allow any paint or oil to stick to its surface.**
- **Do not turn piston rod with balancer fully extended.**
- **Do not disassemble balancer (1) because its cylinder is filled with gas.**

Discarding of Back Door Balancer

- **The gas itself in balancer is harmless but it may issue out of the hole together with chips generated by the drill (2). Therefore, be sure to wear goggle when drilling.**
- **Using a 2 to 3 mm (0.08 to 0.12 in.) drill (2), make a hole to remove gas inside as shown before discarding.**

4) Remove combination lamp.

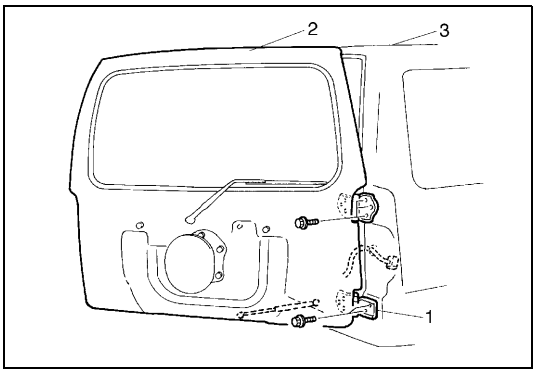

5) Remove door hinge bolts and door (2).

1.	Back door hinge
3.	Body

INSTALLATION

Reverse removal procedure to install back door noting following points.

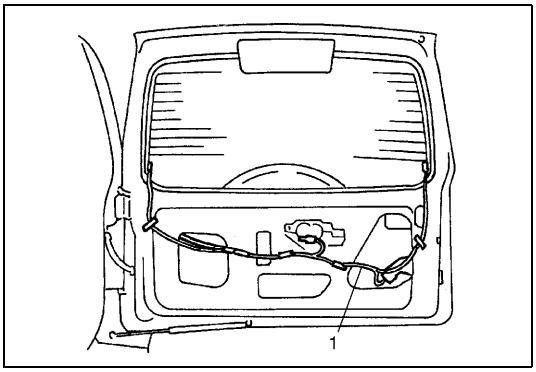

- Secure wiring harness (1).

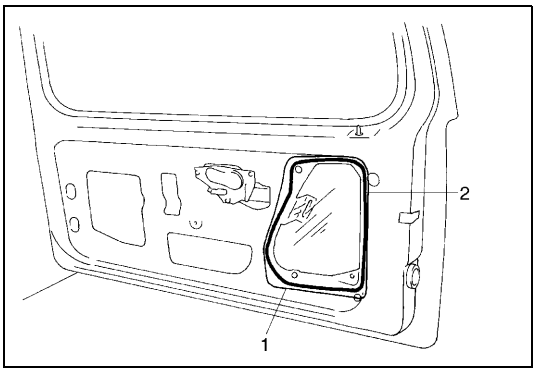

- Secure door sealing cover (1).

NOTE:

Use adhesive (2) to seal sealing cover to back door.

- Adjust door latch striker position by referring “Back Door Lock Assembly” in this section so that door is positioned correctly.
- Adjust door cushion so that door contacts body when closed.

Under Body Dimensions

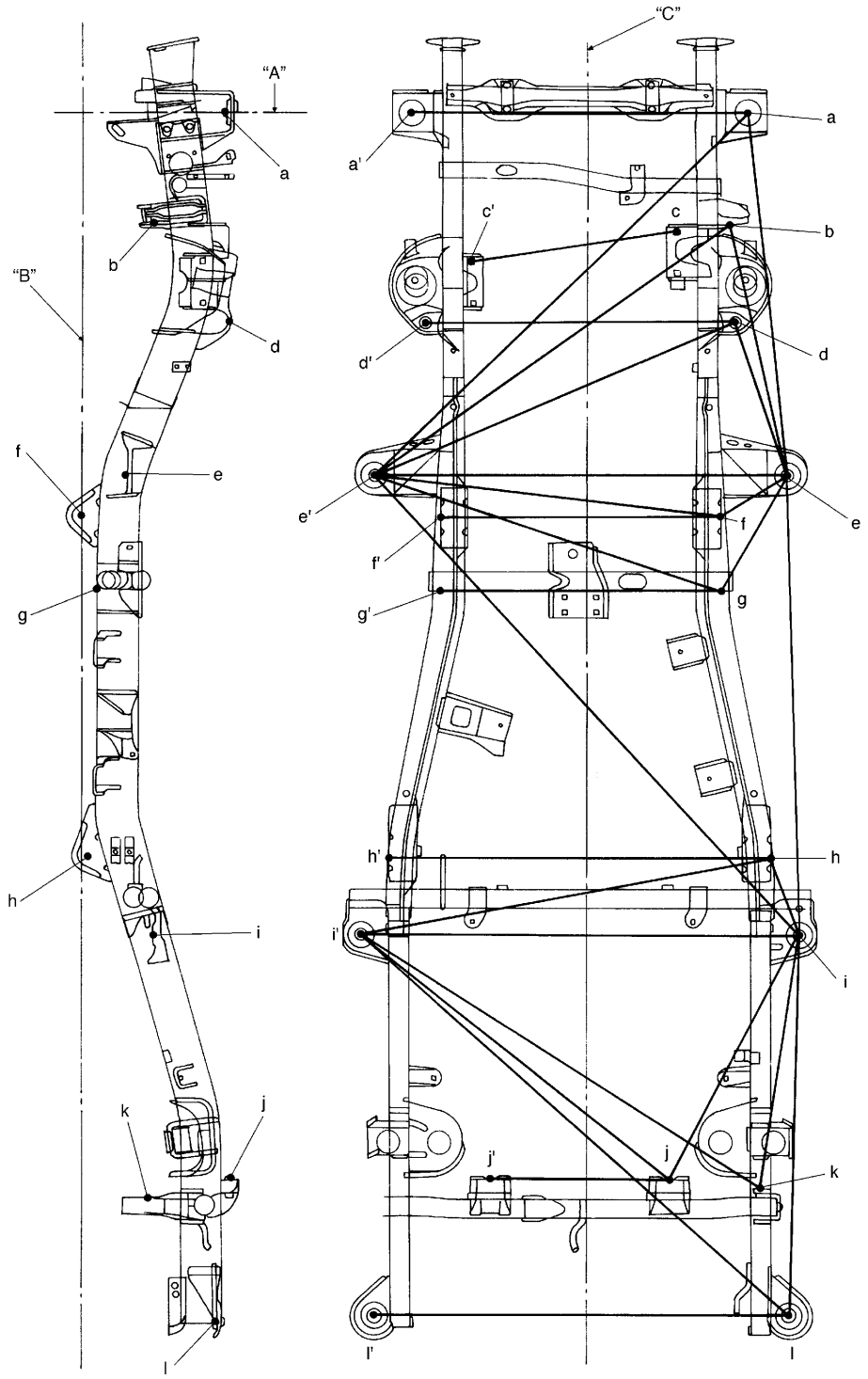

a, a'. 1st mounting installation hole	f, f'. Front suspension arm installation hole	k. Lateral rod front section installation hole
b. Lateral rod rear section installation hole	g, g'. Zig hole	l, l'. 4th mounting installation hole
c, c'. Engine mounting installation hole	h, h'. Rear suspension arm installation hole	"A": Standard line
d, d'. Front shook absorber installation	i, i'. 3rd mounting installation hole	"B": Standard line
e, e'. 2nd mounting installation	j, j'. Rear shock absorber installation hole	"C": Standard line

Projection Dimension

Measurement Position	Length from line "A" mm (in.)	Length from line "B" mm (in.)	Length from line "C" mm (in.)
a	0 (0)	368 (14.49)	425 (16.73)
b	285 (11.22)	156 (6.14)	397 (15.63)
c	302 (11.89)	335 (13.19)	241 (9.49)
d	532 (20.94)	368 (14.49)	390 (15.35)
e	920 (36.22)	113 (4.45)	520 (20.47)
f	1025 (40.35)	0 (0)	356 (14.02)
g	1215 (47.83)	36 (1.42)	355 (13.98)
h	1900 (74.80)	16 (0.63)	481 (18.94)
i	2098 (82.60)	182 (7.17)	553 (21.78)
j	2719 (107.05)	370 (14.57)	226 (8.90)
k	2765 (108.86)	101 (3.98)	481 (18.94)
l	3065 (120.67)	325 (12.80)	523 (20.59)

Measurement Dimension

Measurement Position	Length mm (in.)	Measurement Position	Length mm (in.)
a – a'	850 (33.46)	g – e'	927 (36.50)
a – e'	1343 (52.87)	g – g'	710 (27.95)
a – e	960 (37.80)	h – h'	962 (37.87)
b – e'	117 (4.61)	h – i'	1066 (41.97)
b – e	649 (25.55)	h – i	268 (10.55)
c – c'	515 (20.28)	i – i'	1106 (43.54)
d – d'	780 (30.71)	i – j	727 (28.62)
d – e'	1022 (40.24)	i – k	676 (26.61)
d – e	482 (18.98)	i – e	978 (38.50)
e – e'	1040 (40.94)	j – i'	1014 (39.92)
e – f	225 (8.86)	k – i'	1233 (48.54)
e – g	347 (13.66)	j – j'	452 (17.80)
e – i	1181 (46.50)	l – i	1454 (57.24)
f – e'	889 (35.00)	l – i'	1064 (41.90)

Body Dimensions

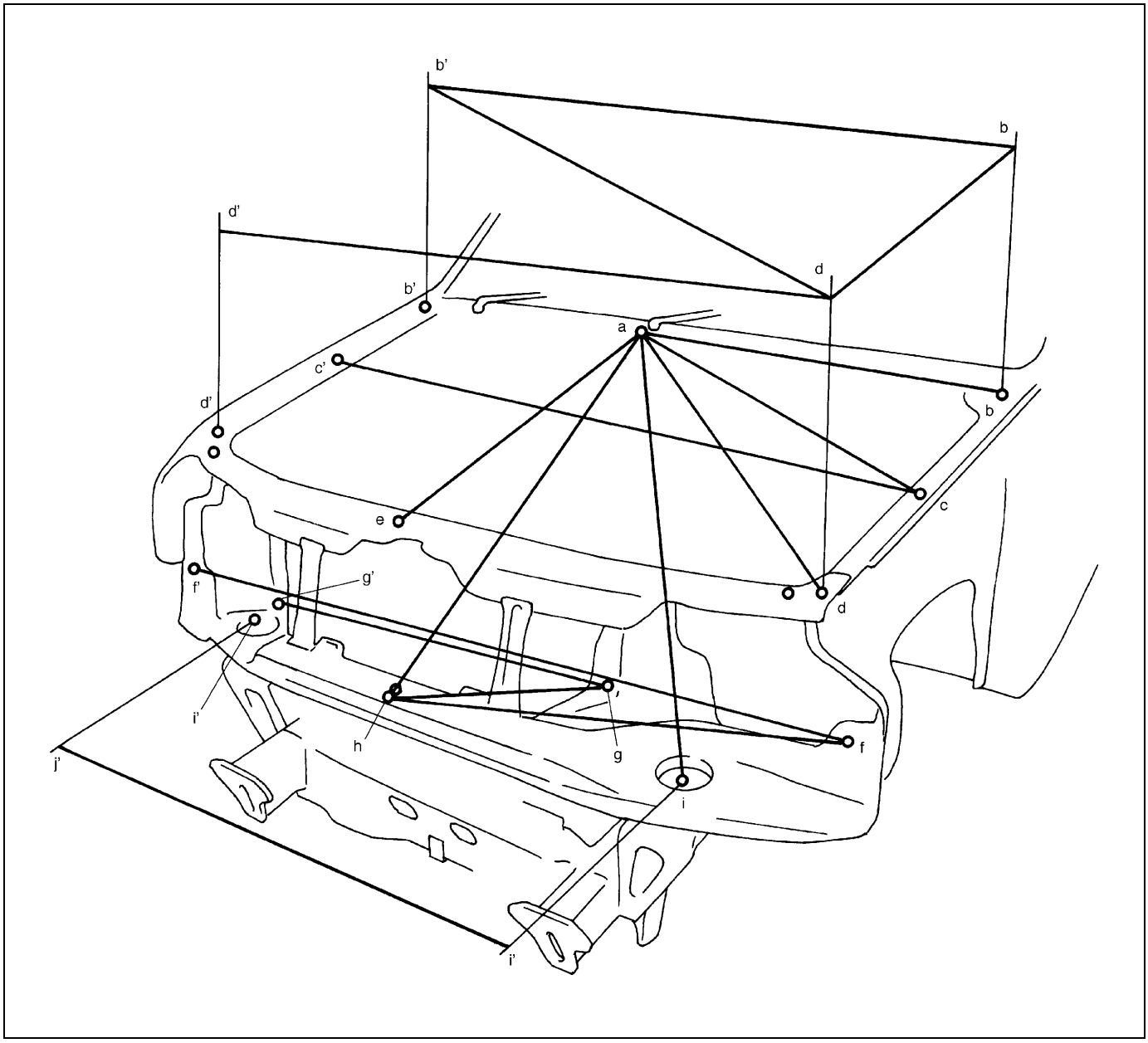

a. Garnish installation clip hole	d, d'. Front fender installation hole	g, g'. Headlight installation hole
b, b'. Front fender installation hole	e. Hood cushion installation hole	h. Front bumper installation clip hole
c, c'. Front fender installation hole	f, f'. Headlight installation resin nut hole	i, i'. 1st mounting installation hole

Measurement Dimension

Measurement Position	Length mm (in.)	Measurement Position	Length mm (in.)
a – b	660 (25.98)	c – c'	1222 (48.11)
a – c	664 (26.14)	d – b'	1166 (45.90)
a – d	833 (32.80)	d – d'	1393 (54.84)
a – i'	890 (35.04)	f – f'	1266 (49.84)
a – h	837 (32.95)	f – h	661 (26.02)
a – e	667 (26.26)	g – g'	654 (25.75)
b – b'	1266 (49.84)	g – h	351 (13.82)
b – d	681 (26.81)	i – i'	850 (33.46)

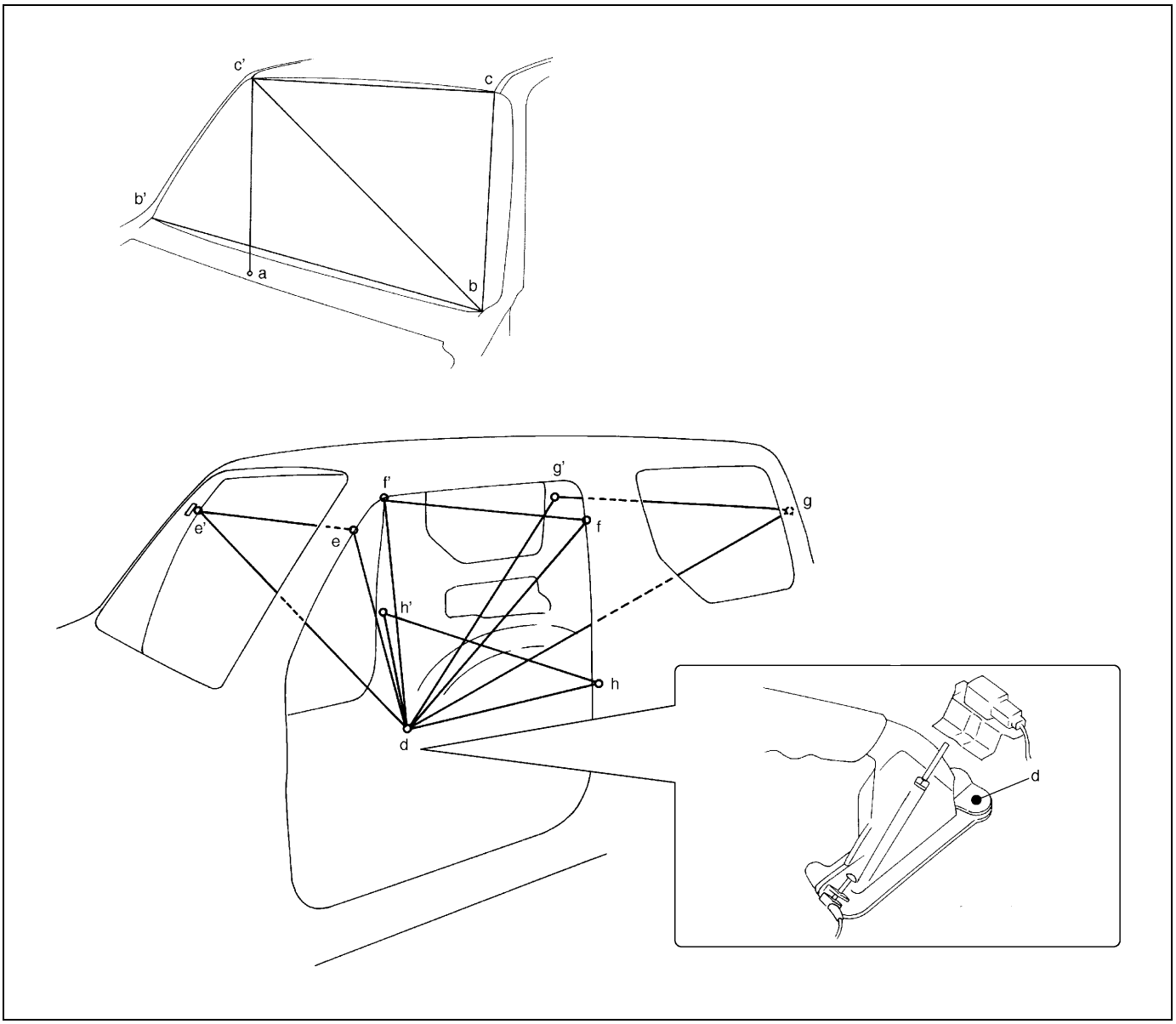

a. Garnish installation clip hole	d. Parking brake rear installation hole	g, g'. Rear seat belt upper installation hole
b, b'. Front end of front windshield upper installation section	e, e'. Body outer panel clipping section	h, h'. Body outer panel ϕ8 zig hole
c, c'. Front end of front windshield lower installation section	f, f'. Body outer panel clipping section	

Measurement Dimension

Measurement Position	Length mm (in.)	Measurement Position	Length mm (in.)
a – c'	902 (35.51)	d – g	1479 (58.23)
b – b'	1190 (46.85)	d – g'	1514 (59.61)
b – c	620 (24.41)	d – h	718 (28.27)
b – c'	1240 (48.82)	d – h'	795 (31.30)
c – c'	969 (38.15)	e – e'	1102 (43.39)
d – e	1179 (46.42)	f – f'	1127 (44.37)
d – e'	1221 (48.07)	g – g'	1103 (43.43)
d – f	1063 (41.85)	h – h'	1254 (49.37)
d – f'	1111 (43.74)		

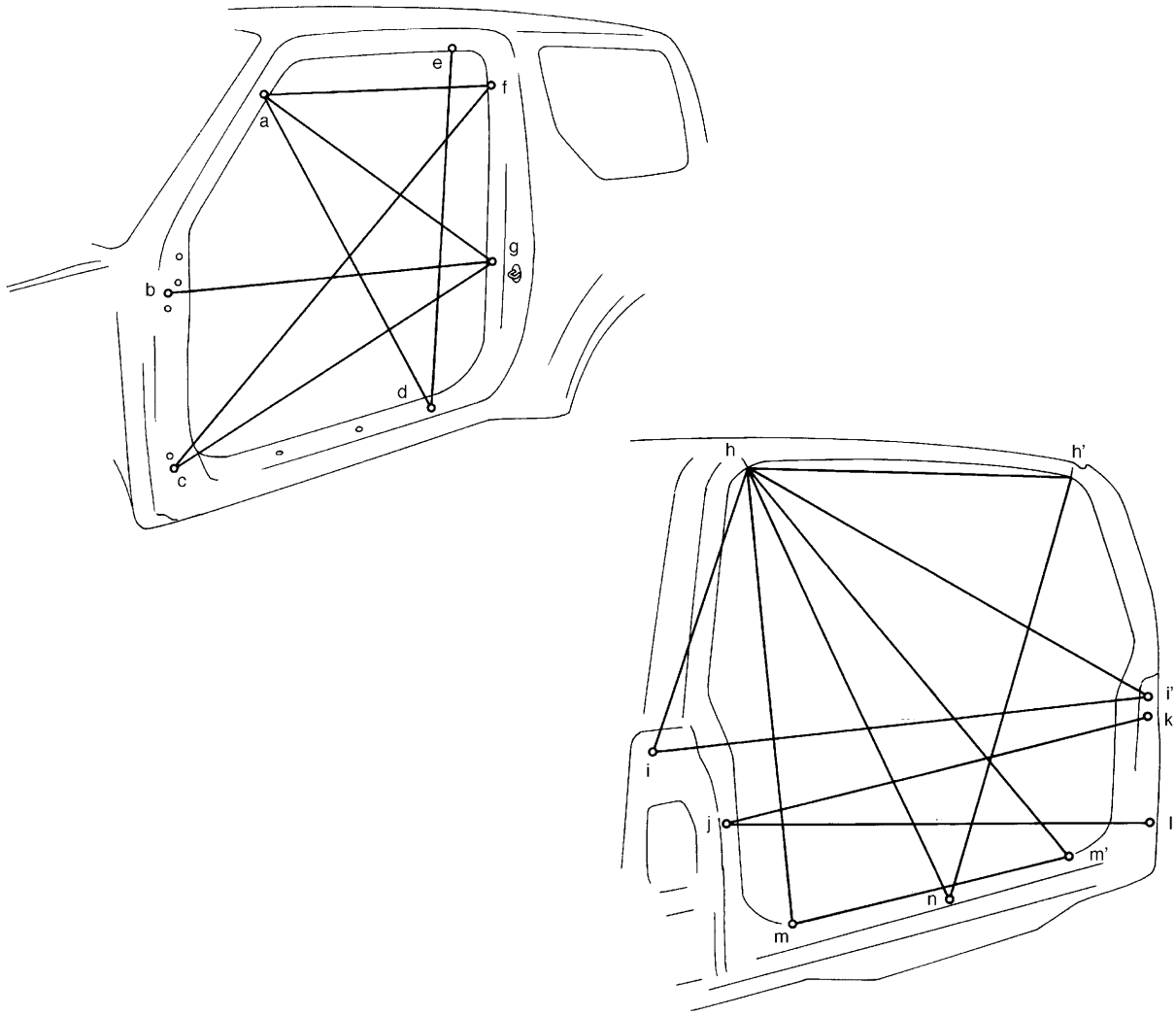

a. Body outer panel clipping section	f. Body outer panel clipping section	k. Back door upper hinge in upper installation hole
b. Front door upper hinge in upper installation hole	g. Body outer panel ϕ8 zig hole	l. Back door lower hinge in lower installation hole
c. Front door lower hinge in lower installation hole	h, h'. Rear end of roof panel upper installation section	m, m'. Rear end of piller outer panel inside installation section
d. Side sil scuff installation hole (rear end)	i, i'. Combination lamp upper installation hole	n. Rear bumper installation hole
e. Body outer panel ϕ8 zig hole	j. Back door striker upper installation hole	

Measurement Dimension

Measurement Position	Length mm (in.)	Measurement Position	Length mm (in.)
a – d	1094 (43.07)	h – i'	1186 (46.69)
a – f	683 (26.89)	h – m	896 (35.28)
a – g	861 (33.90)	h – m'	1224 (48.19)
b – g	1099 (43.27)	h – n	1024 (40.31)
c – f	1428 (56.22)	i – i'	1297 (51.06)
c – g	1162 (45.75)	j – k	1136 (44.72)
d – e	1074 (42.28)	j – l	1160 (45.67)
h – h'	867 (34.13)	m – m'	804 (31.65)
h – i	540 (21.26)	n – n'	1033 (40.67)

Instrumentation and Driver Information

Instrument Panel

WARNING:
See WARNING at the beginning of this section.

REMOVAL

1) Disconnect negative (–) cable at battery.
2) Disable air bag system, if equipped. Refer to “Disabling Air Bag System” in Section 10B.

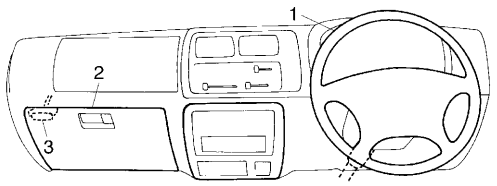

3) Remove glove box (2) and column hole cover.
4) Disconnect wires and cables from heater unit and air inlet box assembly.
5) Remove steering column assembly (1). Refer to “Steering Column Assembly” in Section 3C.
6) Disconnect speedometer connector and remove speedometer assembly.
7) Remove engine hood opener (3).
8) Disconnect couplers (4) which need to be disconnected for removal for instrument panel.
9) Remove instrument panel mounting screws (8).
10) Remove instrument panel mounting bolt (9).
11) Remove instrument panel.

CAUTION:
For vehicle with Air Bag, instrument panel could not be removed with SDM coupler connected.
Use are not to damage Air Bag harness.

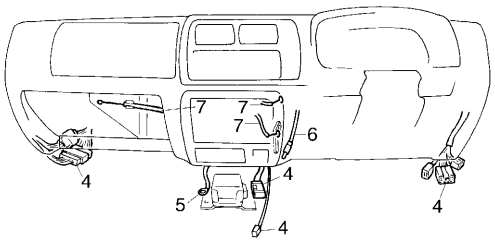

5.	Body ground
6.	Antenna wire
7.	Heater control cable

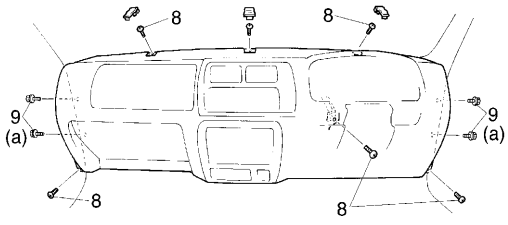

INSTALLATION

1) Install instrument panel by reversing removal procedure, noting the following items.
   - Tighten instrument panel mounting bolts to specified torque.

   Tightening torque
   Instrument panel mounting bolts
   (a): 23 N·m (2.3 kg-m, 17.0 lb-ft)

   - When installing each part, be careful not to catch any cable or wiring harness.
   - When installing steering column assembly, refer to “Steering Column Assembly” in Section 3C.
2) Adjust control cables. (Refer to Step 1) of “INSTALLATION” under “Heater Control Lever Assembly” in Section 1A.)
3) Enable air bag system if equipped. Refer to “Enabling Air Bag System” in Section 10B.

Seats

Front Seat

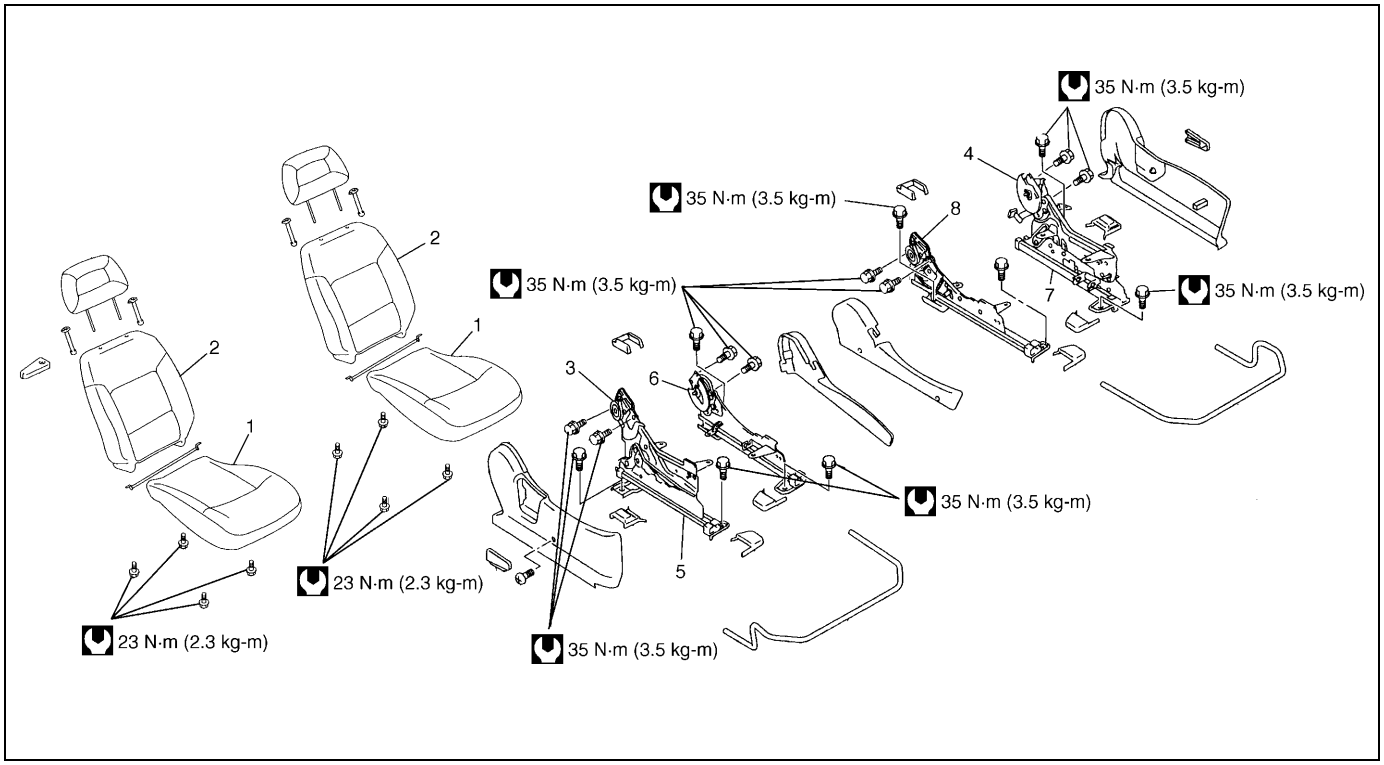

1. Seat cushion	4. Reclining assembly (LH side)	7. Seat adjuster (LH outside)
2. Seat back	5. Seat adjuster (RH outside)	8. Seat adjuster (LH inside)
3. Reclining assembly (RH side)	6. Seat adjuster (RH inside)	Tightening torque

REMOVAL

1) Remove four mounting bolt to remove seat cushion.
2) Remove four mounting bolts to remove seat back.
3) Disassemble and repair seat as necessary.

INSTALLATION

Reverse removal procedure to install front seat.
Torque to specifications, as shown.

Rear Seat

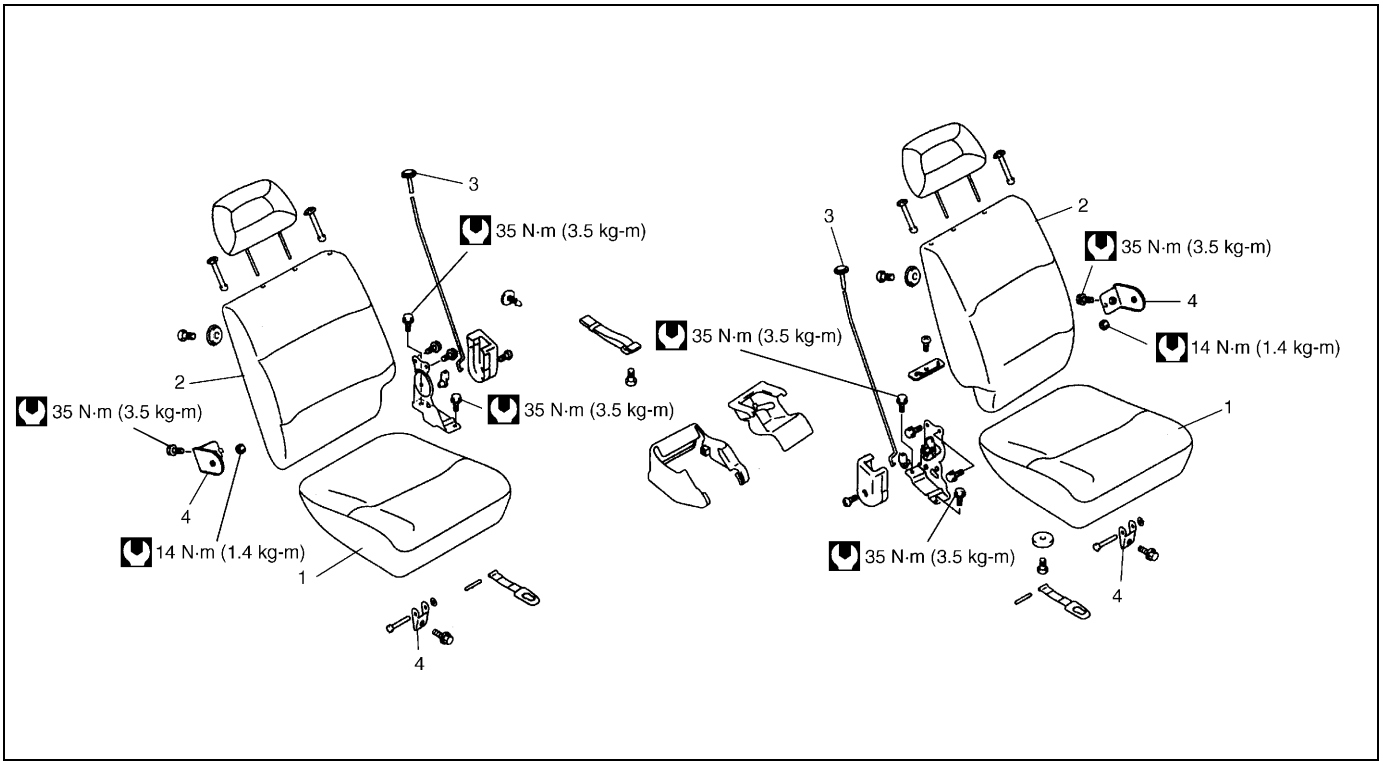

1. Seat cushion	3. Seat auto lock release handle	Tightening torque
2. Seat back	4. Seat hinge male	

REMOVAL

1) Remove four mounting bolt to remove seat cushion.
2) Remove four mounting bolts to remove seat back.
3) Disassemble and repair seat as necessary.

INSTALLATION

Reverse removal procedure to install rear seat.
Torque to specifications, as shown.

Paint and Coatings

Anti-Corrosion Treatment

WARNING:

Standard shop practices, particularly eye protection, should be followed during the performance of the below-itemized operations to avoid personal injury.

As rust proof treatment, steel sheets are given corrosion resistance on the interior and/or exterior.
These corrosion resistance steel sheet materials are called one of two-side galvanized steel sheets.
It is for the sake of rust protection that these materials are selected and given a variety of treatments as described blow.

- Steel sheets are treated with cathodic electroprimer which is excellent in corrosion resistance.
- Rust proof wax coatings are applied to door and side sill insides where moisture is liable to stay.
- Vinyl coating is applied to body underside and wheel housing inside.
- Sealer is applied to door hem, engine compartment steel sheet-to-steel sheet joint, and the like portions to prevent water penetration and resulting in rust occurrence.

In panel replacement or collision damage repair, leaving the relevant area untreated as it is in any operation which does disturb the above-mentioned rust proof treatment will cause corrosion to that area. Therefore, it is the essential function of any repair operation to correctly recoat the related surfaces of the relevant area.
All the metal panels are coated with metal conditioners and primer coating during vehicle production. Following the repair and/or replacement parts installation, every accessible bare metal surface should be cleaned and coated with rust proof primer. Perform this operation prior to the application of sealer and rust proof wax coating.
Sealer is applied to the specific joints of a vehicle during production. The sealer is intended to prevent dust from entering the vehicle and serves also as an anticorrosion barrier. The sealer is applied to the door and hood hem areas and between panels. Correct and reseal the originally sealed joints if damaged. Reseal the attaching joints of a new replacement panel and reseal the hem area of a replacement door or hood.
Use a quality sealer to seal the flanged joints, overlap joints and seams. The sealer must have flexible characteristics and paint ability after it's applied to repair areas.
For the sealer to fill open joints, use caulking material. Select a sealer in conformance with the place and purpose of a specific use. Observe the manufacturer's label-stand instructions when using the sealer.
In many cases, repaired places require color painting. When this is required, follow the ordinary techniques specified for the finish preparation, color painting and undercoating build-up.
Rust proof wax, a penetrative compound, is applied to the metal-to-metal surfaces (door and side sill insides) where it is difficult to use ordinary undercoating material for coating. Therefore, when selecting the rust proof wax, it may be the penetrative type.
During the undercoating (vinyl coating) application, care should be taken that sealer is not applied to the engine-related parts and shock absorber mounting or rotating parts. Following the under coating, make sure that body drain holes are kept open.
The sequence of the application steps of the anti-corrosion materials are as follows:

1) Clean and prepare the metal surface.
2) Apply primer.
3) Apply sealer (all joints sealed originally).
4) Apply color in areas where color is required such as hem flanges, exposed joints and under body components.
5) Apply anticorrosion compound (penetrative wax).
6) Apply undercoating (rust proof material).

When the welding or heating operation causes the original galvanization or other anticorrosive materials to be burnt, the interior and under-body panel surfaces must be cleaned.
Removal of residues of the burning should be carried out carefully when the relevant place has box type construction or has shape which limits the access to the interior surfaces. In general, the following method can be used satisfactorily for the removal of those residues.
Scrape the accessible places. If a standard putty knife or scraper does not fit to the relevant place, consider to use a more flexible scraper to a place narrowly enclosed by sheet metals.
A jet of compressed air can remove most residues, and is effective to limited areas.
However, this type of operation absolutely requires eye protection.

Metal Replacement Parts Finishing

1) The metal service replacement parts (or assemblies) are coated with electro-deposition primer.
   For the proper adhesion of a paint, the following finish process (refinish steps) becomes necessary.
   a) Use wax or grease-removing solvent to clean the part.
   b) Use a wet or dry sand-paper (No. 400) to polish the panel lightly. DO not polish it forcibly to produce any scratch. Clean the part again.
   c) If factory-applied primer coating is cut through to the bare metal, apply metal conditioner to the bare metal exposed to open air. As for method of use of the metal conditioner, follow directions on the container.
   d) Apply primer-surfacer to the part completely dry before starting sand-paper polishing. As for drying time, follow directions advised on the primer-surfacer container.
   e) Use a wet or dry sand-paper (No. 400) and water to polish the panel lightly.
   f) Wash the part again.
   g) Apply color, coating to the part.
   h) Different paints demand different drying methods. Hence, follow directions advised on the pertinent paint container.
   i) When lacquer coating (quick-drying paint coating) is applied, dry coated surface and polish it with compound.
      In the case of the melamine or acrylic coating, compound polishing can be omitted after drying.
   j) If the case of lacquer coating, wax should not be applied to coated surface until the surface has dried completely (for approx. two months).
2) Before replacing exterior parts or assemblies, check paint conditions of all the covered or hidden interior surfaces. If any rust scale is found at these places, proceed as follows:
   a) Use a proper wire brush, adhesive or liquid rust removing agent to remove rust. As for the method of use, follow directions advised for respective materials.
   b) If necessary, wash parts with detergent, rinse, and dry them.
   c) Before installing exterior body parts, apply anticorrosive compound to all cleaner surfaces of exterior body parts. Also, apply anticorrosive compound to inner surfaces of exterior body parts to be installed.

SEALANT APPLICATION AREA

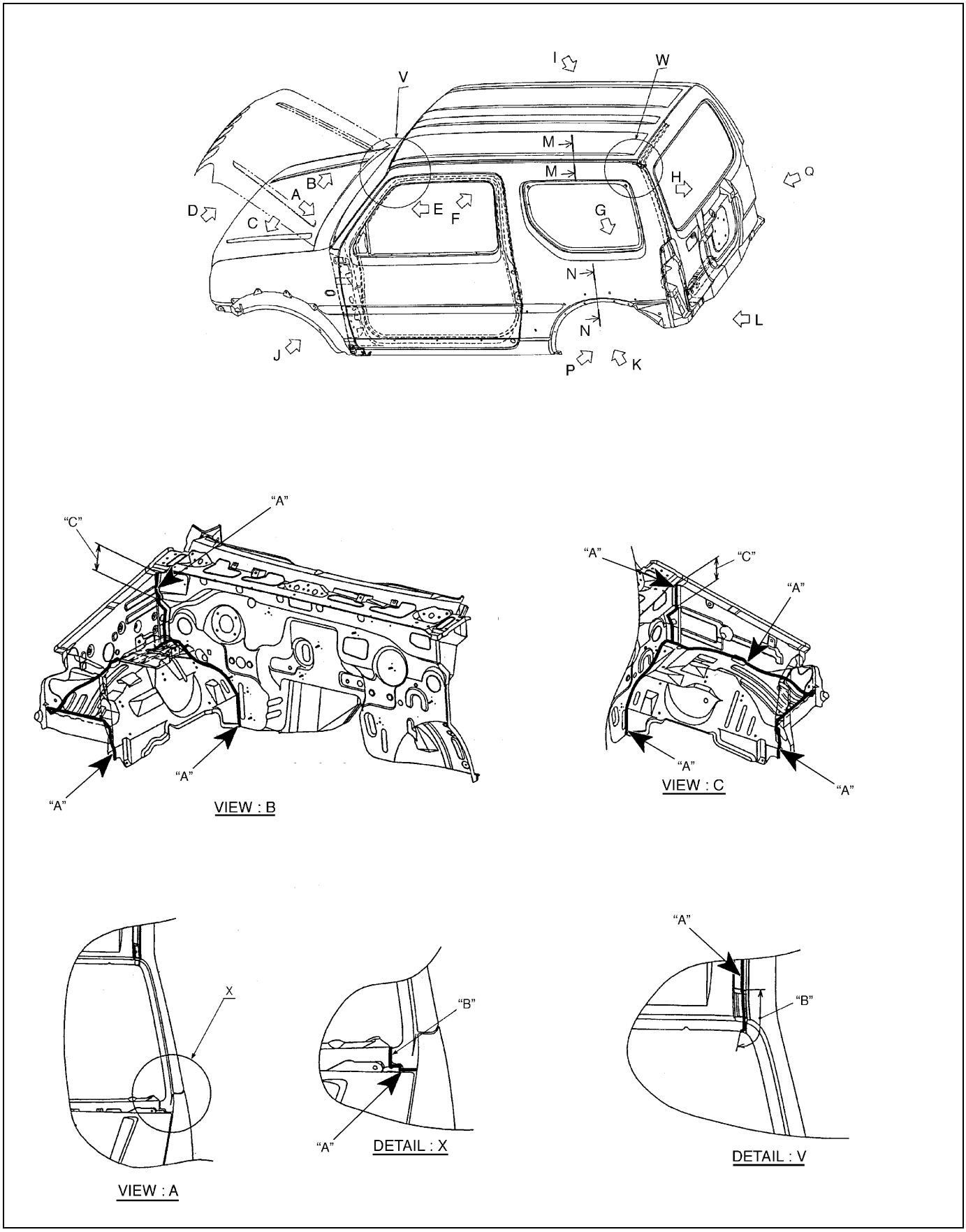

"A":	Apply sealant to painted area.
"B":	Wipe off excess sealant after application.
"C":	Smooth out sealant with a brush in one direction.

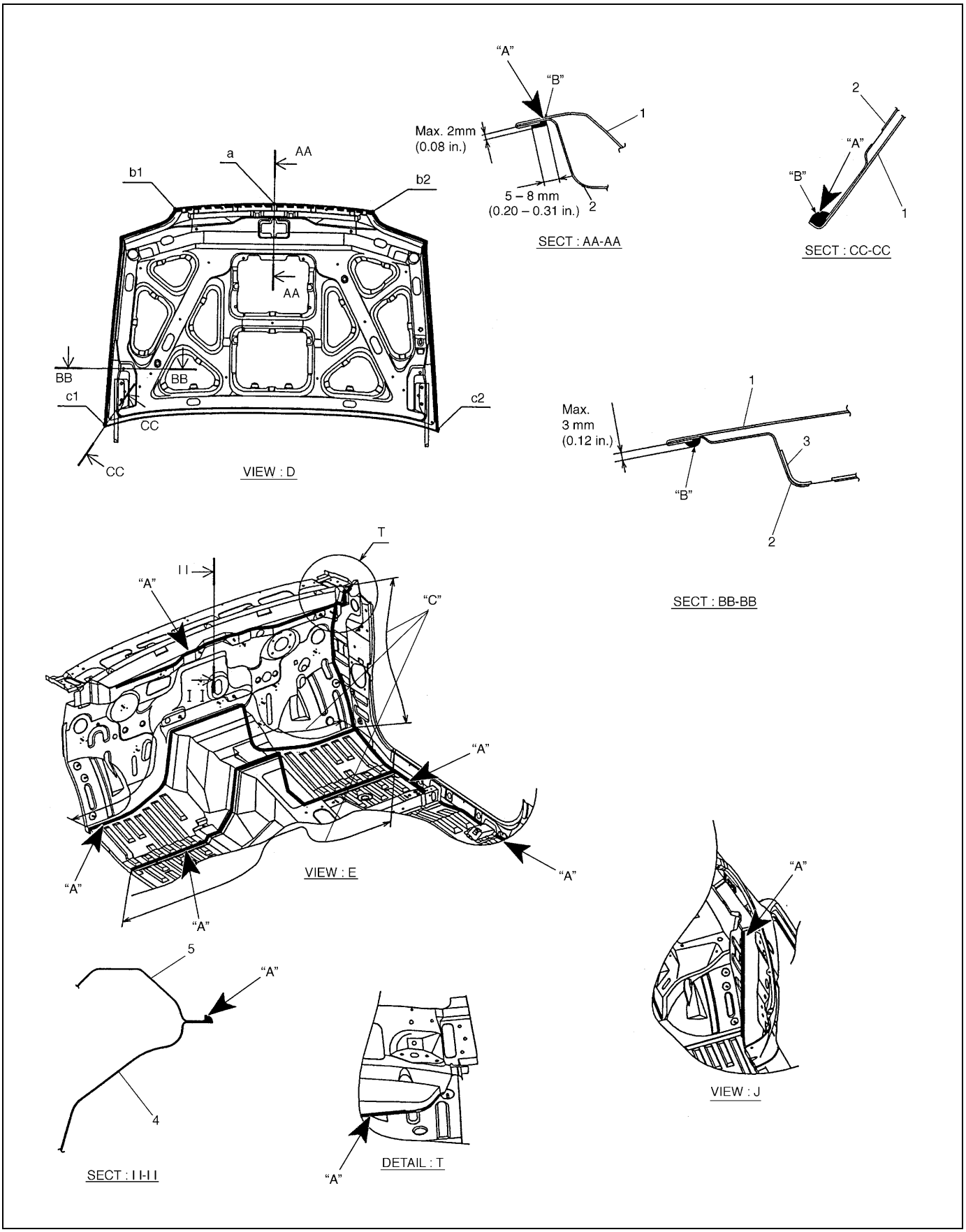

"A": Apply sealant to painted area.	1. Hood outer panel	4. Dash panel
"B": Make sure that the sealant covers completely the end of flange.	2. Hood inner panel	5. Cowl top panel
"C": Smooth out sealant with a brush in one direction.	3. Hood hinge reinforcement	

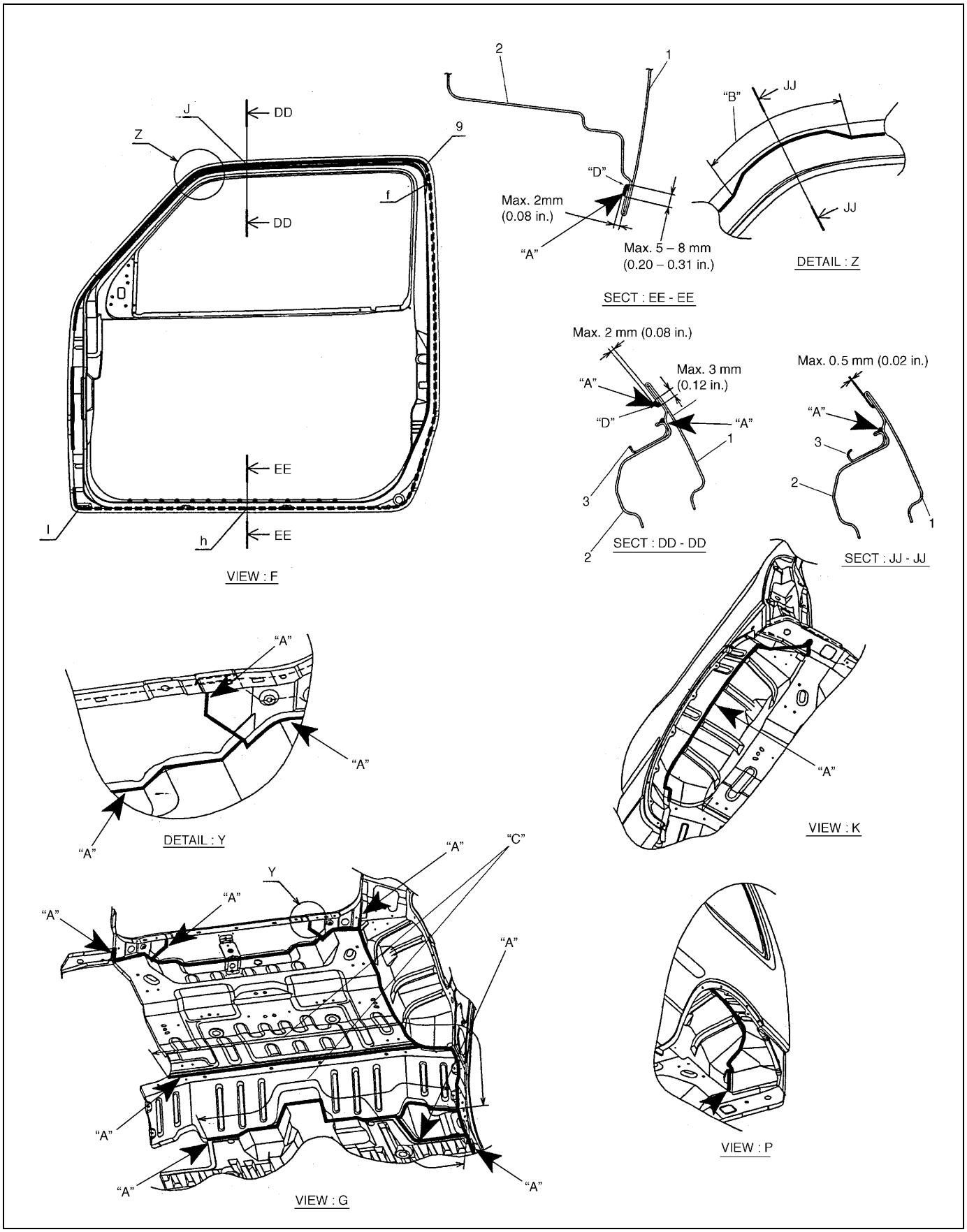

"A": Apply sealant to painted area.	1. Front door outer panel
"B": Wipe off excess sealant after application.	2. Front door inner panel
"C": Smooth out sealant with a brush in one direction.	3. Door weatherstrip rail
"D": Make sure that the sealant covers completely the end of flange.	

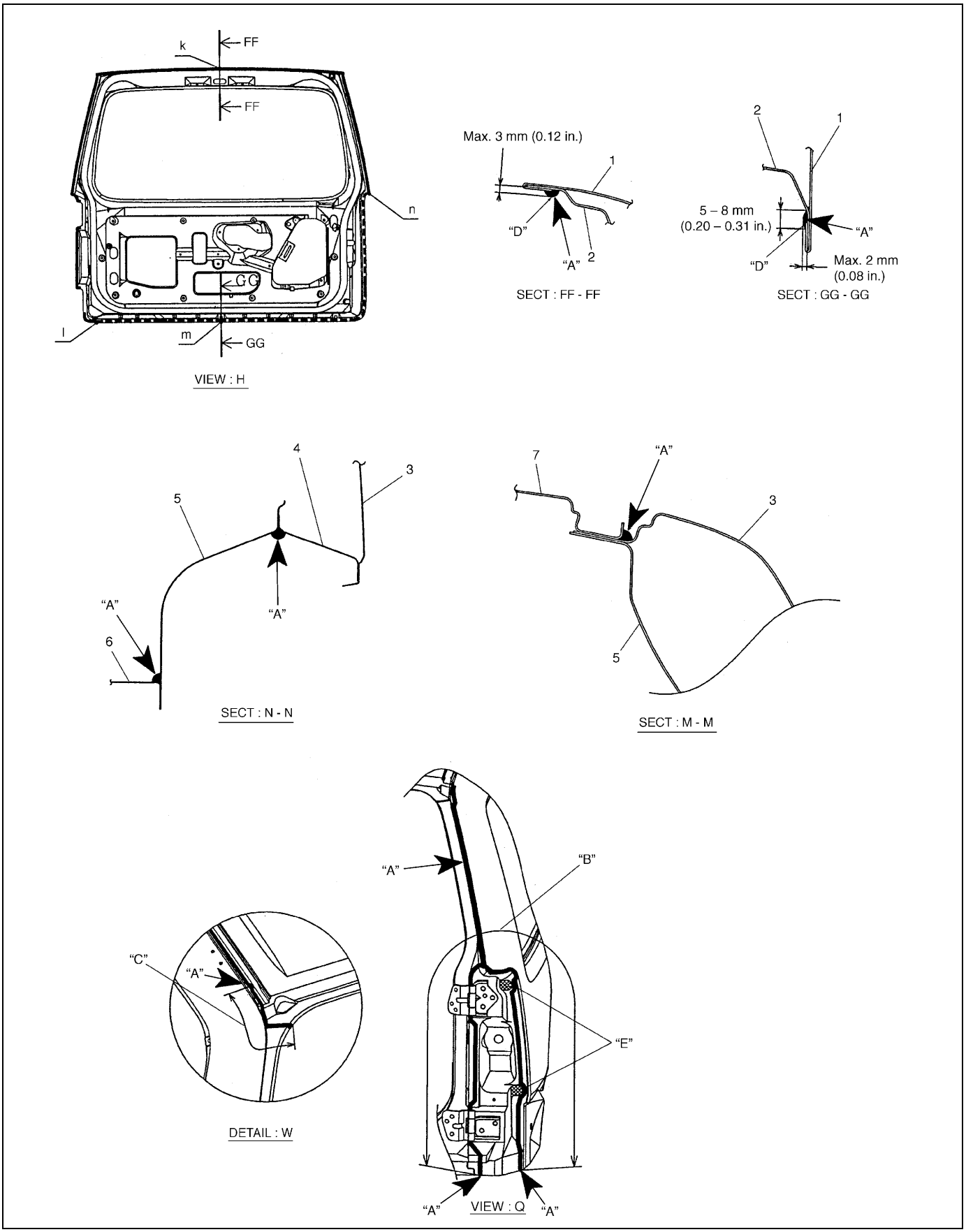

"A": Apply sealant to painted area.	1. Back door outer panel	6. Rear floor panel
"B": Smooth out sealant with a brush in one direction.	2. Back door inner panel	7. Roof panel
"C": Wipe off excess sealant after application.	3. Side body outer panel	
"D": Make sure that the sealant covers completely the end of flange.	4. Rear wheel housing outer panel	
"E": Do not sealant to this area.	5. Rear quarter inner panel	

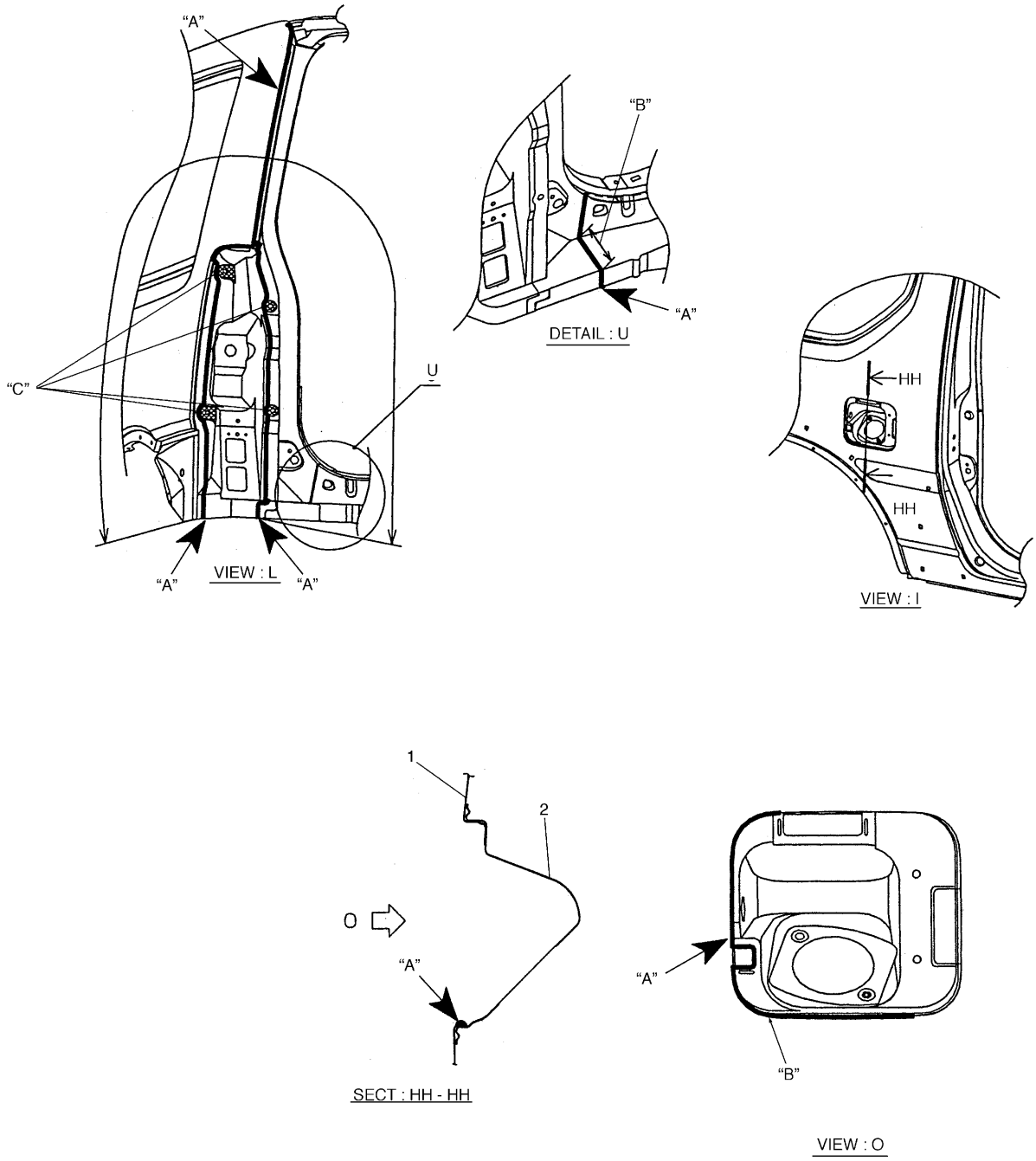

"A": Apply sealant to painted area.	1. Side body outer panel
"B": Smooth out sealant with a brush in one direction.	2. Fuel inlet box
"C": Do not sealant to this area.	

UNDER COATING / ANTI-CORROSION COMPOUND APPLICATION AREA

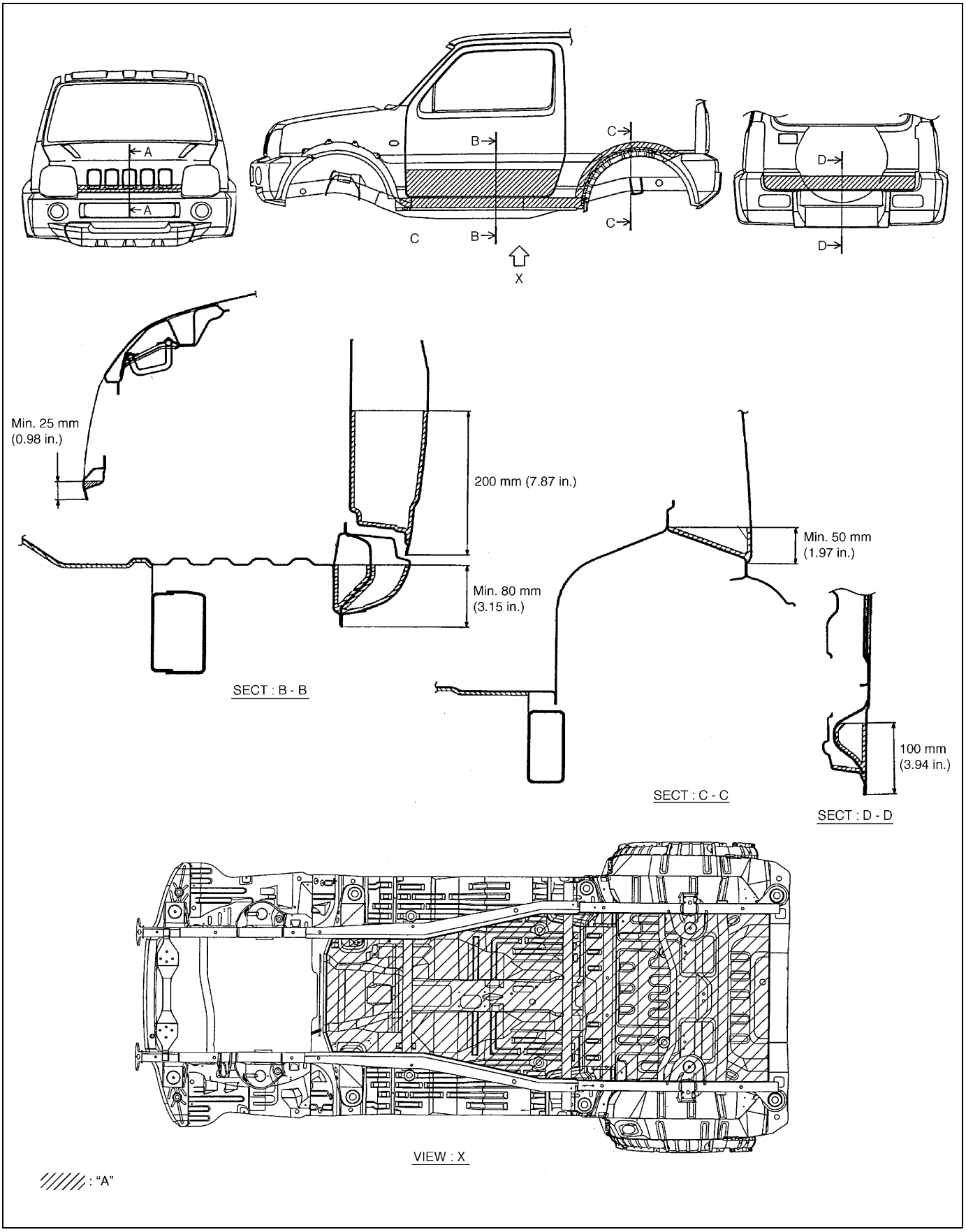

"A": Apply rustproof wax to shaded area (Over 50 μm)

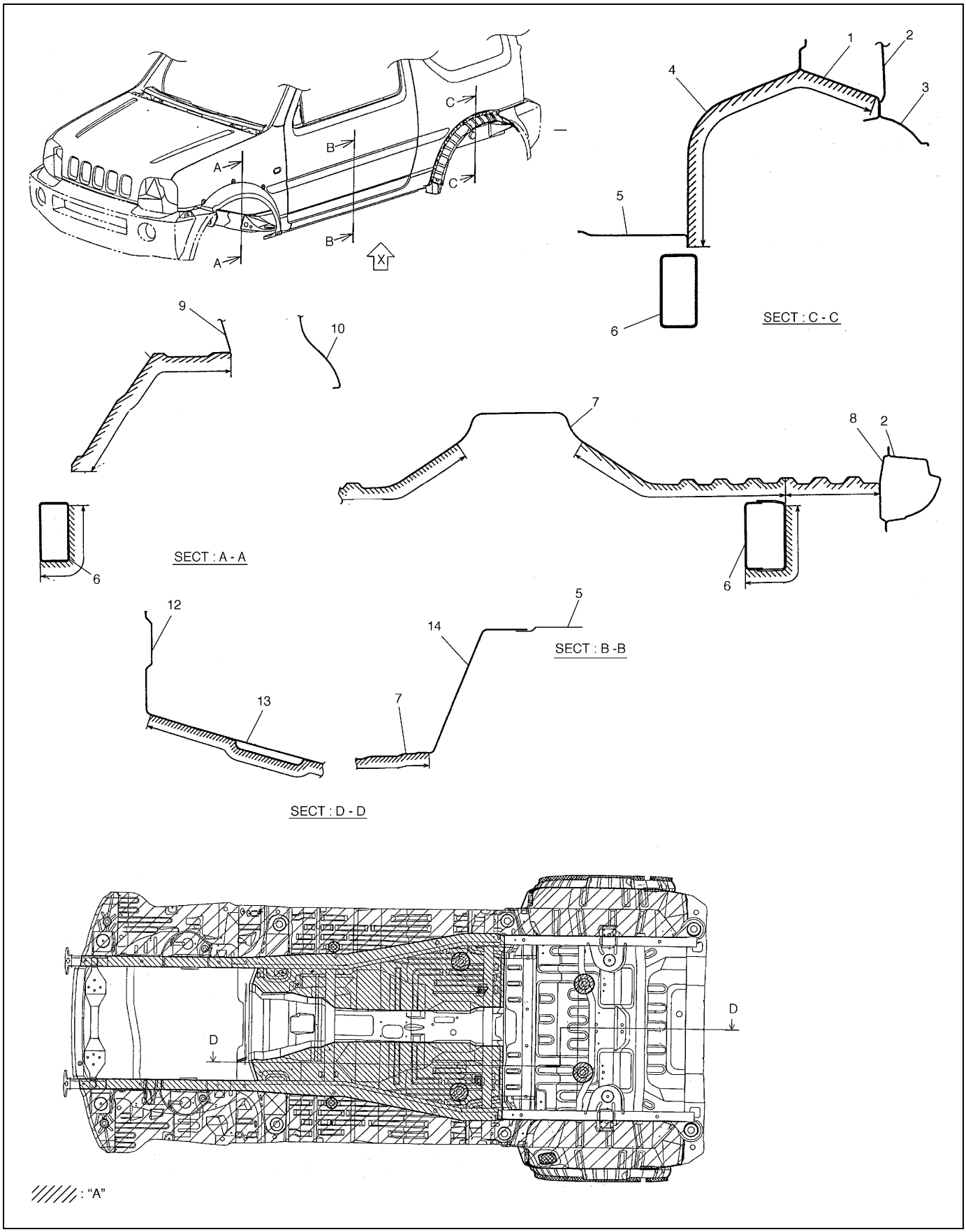

"A": Apply undercoating to shaded area (Over 400 μm)	5. Rear floor	10. Front fender
1. Rear wheel housing	6. Frame	11. Front wheel housing
2. Side body outer	7. Main floor	12. Dash panel
3. Rear splash guard holder	8. Side sill inner	13. Tunnel front
4. Rear quarter inner	9. Front fender apron	14. Center floor

Security and Locks

Front Door Lock Assembly

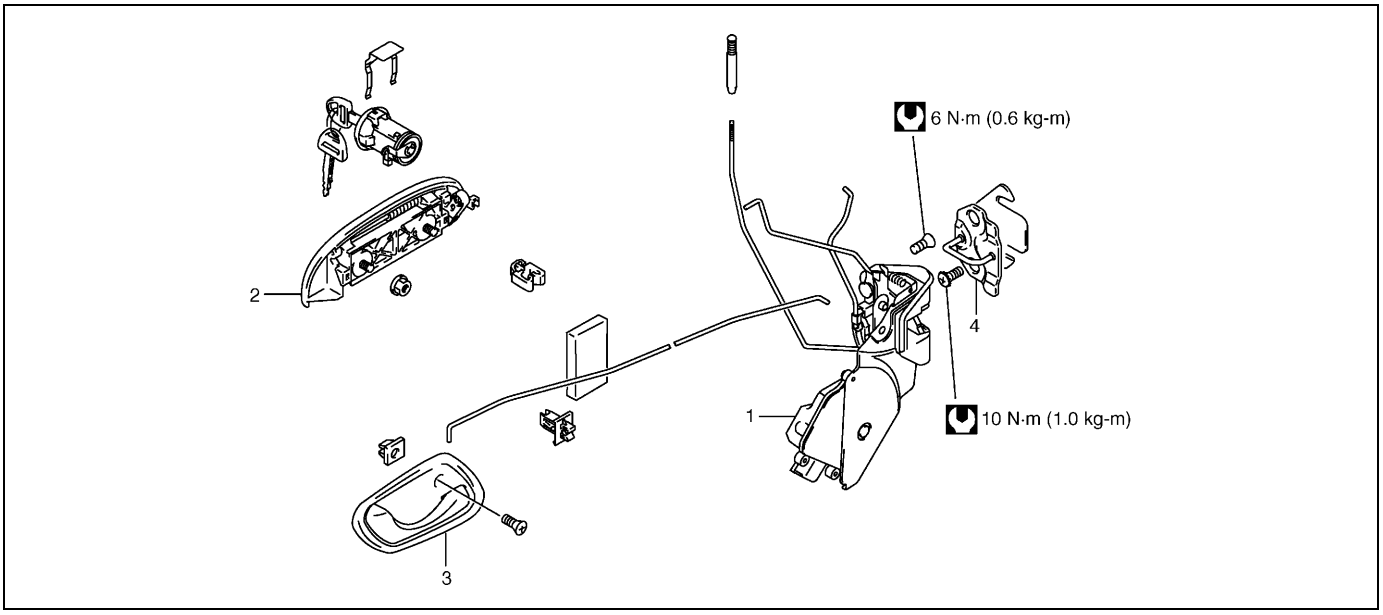

1. Door latch	3. Inside handle bezel	Tightening torque
2. Outside handle	4. Latch striker	

REMOVAL

1) Raise window all the way up.
2) Remove door trim and door sealing cover, refer to steps 1) to 6) of “REMOVAL” under “Front Door Glass” in this section.
3) Remove door sash.

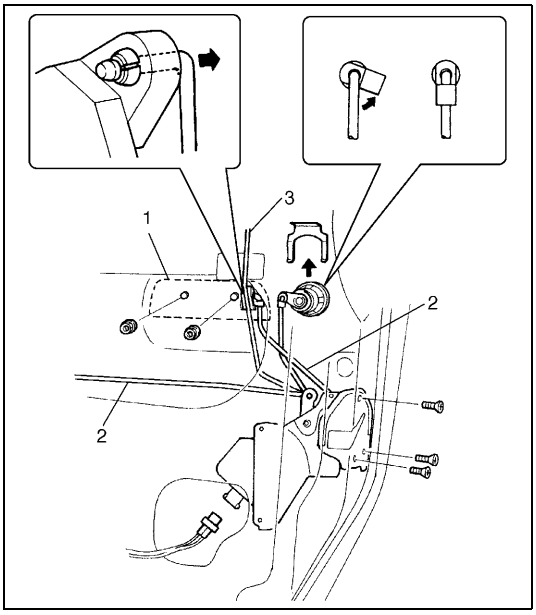

4) Remove door opening control rods (2).
5) Disconnect control rod (3).
6) Disconnect door lock motor lead wire.
7) Remove lock assembly.

1. Out side door handle

INSTALLATION

To install front door lock, reverse removal procedure, noting following.

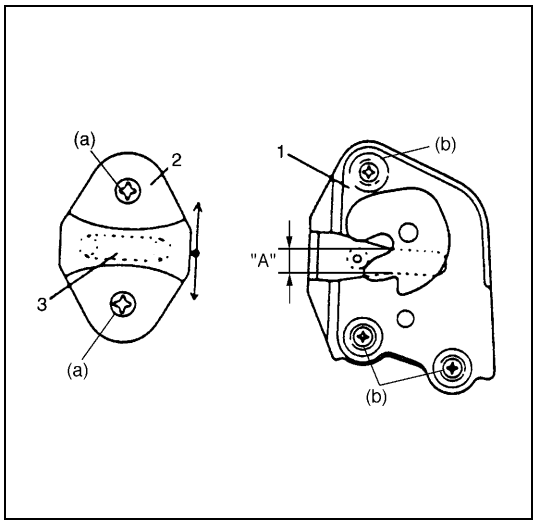

- Door latch striker (2).
  Move door latch striker up or down so its center aligns with the center of groove “A” on the door, as shown.

NOTE:

Striker should be moved vertically and placed level. Do not adjust door lock.

Tightening torque
Door latch striker screw (a): 10 N·m (1.0 kg-m, 7.2 lb-ft)
Door latch screw (b): 6 N·m (0.6 kg-m, 4.3 lb-ft)

1.	Door latch
2.	Shaft

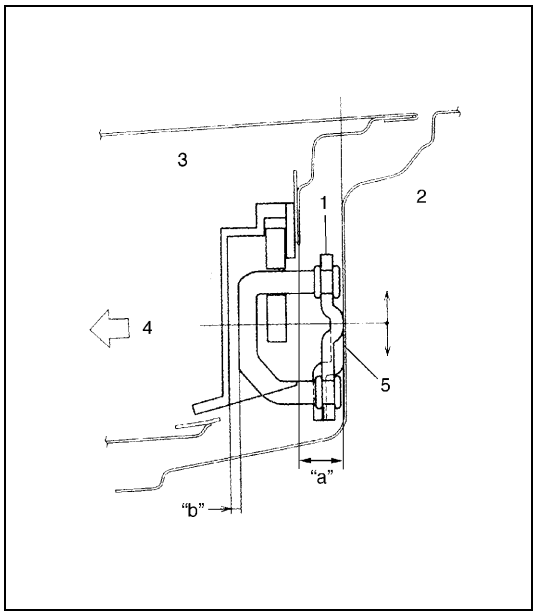

- Move door latch striker (1) sideways to adjust door (3) surface flush with body (2) surface, as shown.
  In order to correctly obtain door latch striker position in the fore-and-aft direction, increase or decrease number of shims (5) inserted between body and striker to adjust it.

Dimension between door surface and body surface
“a”: 13.3 – 14.8 mm (0.52 – 0.58 in.)
Dimension between door latch and door latch striker
“b”: 3.2 – 5.2 mm (0.13 – 0.2 in.)

NOTE:

Apply oil or grease to striker joints periodically.

4.	Front side

Back Door Lock Assembly

REMOVAL

1) Remove inside lock knob.
2) Remove door trim.

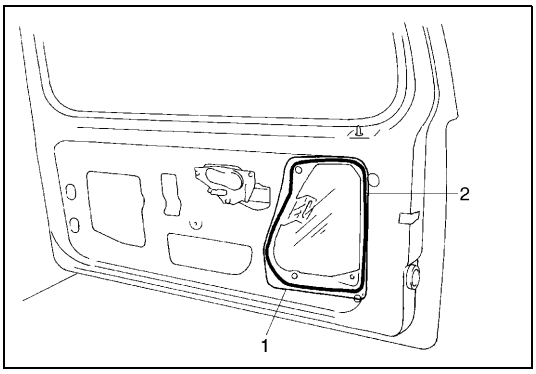

3) Remove door sealing cover (1).

2. Adhesive

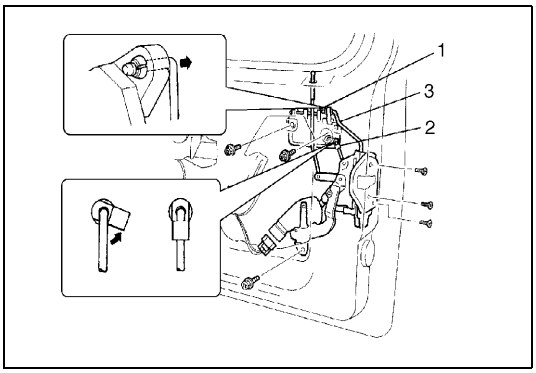

4) Remove door lock control rod (2).
5) Disconnect control rod (3).
6) Disconnect door lock motor lead wire.
7) Remove lock assembly.

1. Outside door handle

INSTALLATION

Reverse removal procedure to install back door lock assembly noting following points.

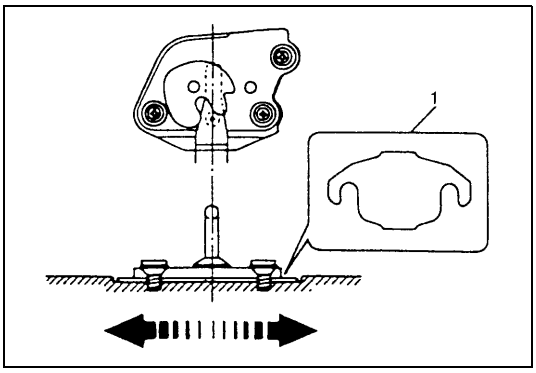

- Door latch striker.
  Adjust door latch striker so that its center aligns with the center of groove in door latch base.
  To adjust door latch and striker with each other, insert proper number of shims (1) below the bottom of striker, as shown.

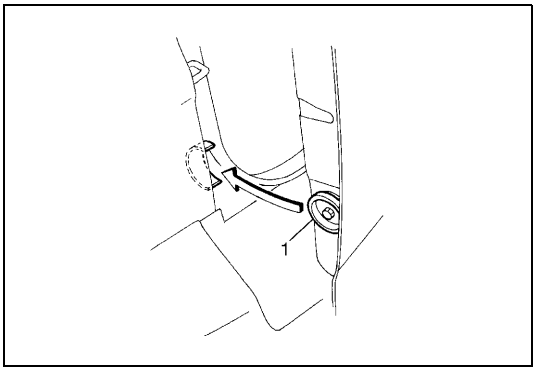

- Door rubber cushion.
  Move rubber cushion (1) installed at the left side of back door to align it with its guide.

Exterior and Interior Trim

Splash Guard

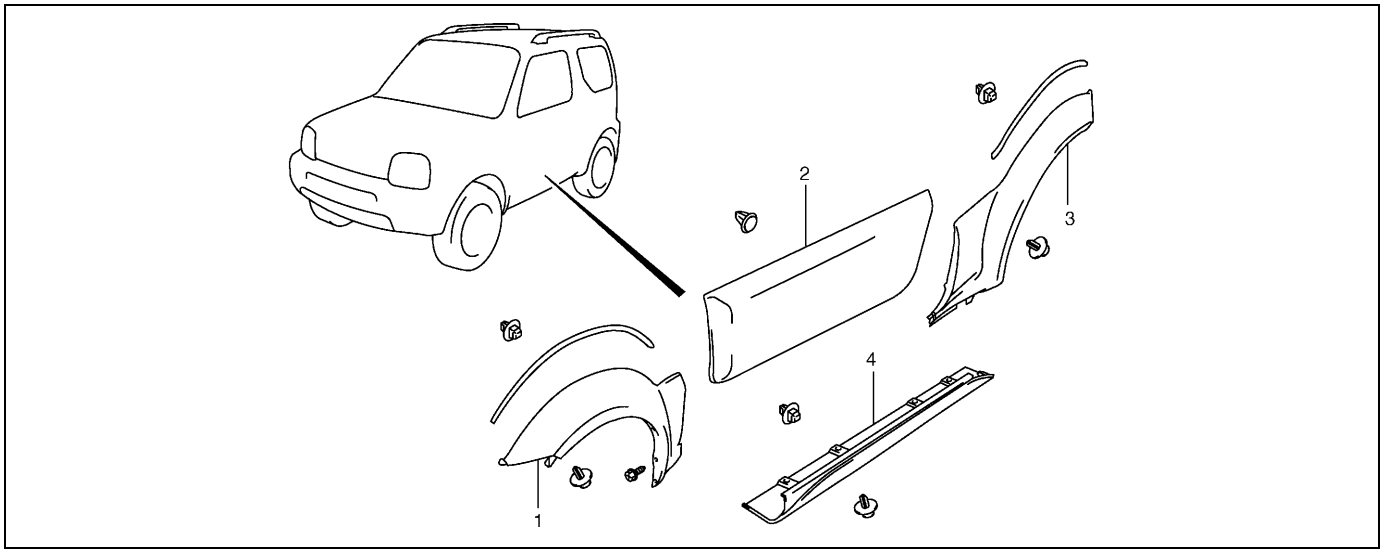

1. Fender splash guard	3. Rear splash guard
2. Front door splash guard	4. Side sill splash guard

REMOVAL AND INSTALLATION

Remove and install as shown in figure.

Roof Rail (If Equipped)

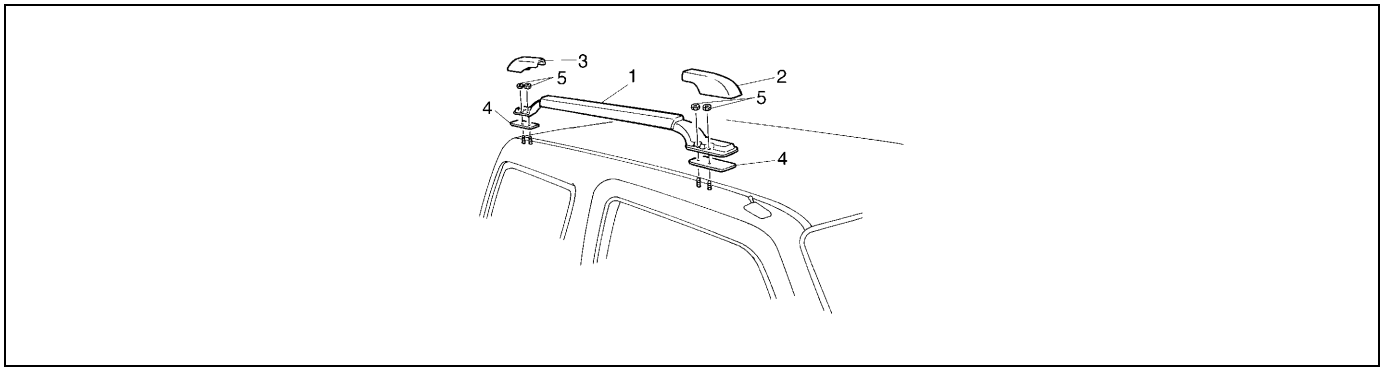

1. Roof rail assembly	3. Rear cap	5. Nut
2. Front cap	4. Base seal	

REMOVAL

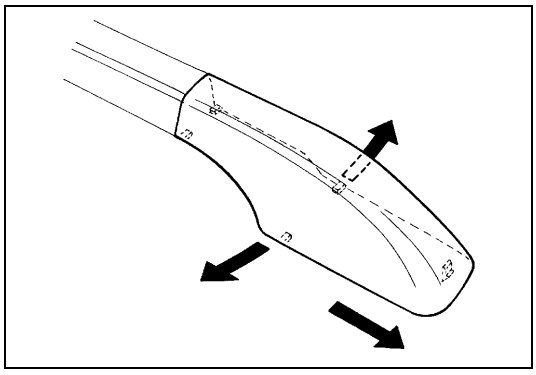

1) Remove roof rail front and rear caps as shown in figure.
2) Remove nuts.
3) Remove roof rail assembly.

INSTALLATION

Reverse removal procedure for installation.
Confirm that each roof rail fixing nut is tightened securely.

Tightening Torque Specification

Fastening part	Tightening torque		
	N•m	kg-m	lb-ft
Front door glass attaching screw	6	0.6	4.3
Front door hinge bolt	27	2.7	19.5
Door latch striker screw	10	1.0	7.2
Door latch screw	6	0.6	4.3

SECTION 10

RESTRAINT SYSTEM

WARNING:

For vehicles equipped with Supplemental Restraint (Air Bag) System

- **Service on and around the air bag system components or wiring must be performed only by an authorized SUZUKI dealer. Refer to "Air Bag System Components and Wiring Location View" under "General Description" in air bag system section in order to confirm whether you are performing service on or near the air bag system components or wiring. Please observe all WARNINGS and "Service Precautions" under "On-Vehicle Service" in air bag system section before performing service on or around the air bag system components or wiring. Failure to follow WARNINGS could result in unintentional activation of the system or could render the system inoperative. Either or these two conditions may result in severe injury.**
- **Technical service work must be started at least 90 seconds after the ignition switch is turned to the "LOCK" position and the negative cable is disconnected from the battery. Otherwise, the system may be activated by reserve energy in the Sensing and Diagnostic Module (SDM).**

NOTE:

To determine if the vehicle is equipped with seat belt pretensioner, refer to Owner's Manual.

CONTENTS

General Description 10-2
Seat Belt Pretensioner (If Equipped) 10-3
Diagnosis 10-3
Inspection and Repair Required after Accident 10-3
On-Vehicle Service 10-4
Service Precautions 10-4
Service and diagnosis 10-4
Disabling air bag system for vehicle with air bag system 10-4
Enabling air bag system for vehicle with air bag system 10-4
Handling and storage for vehicle with air bag system 10-4
Disposal for vehicle with air bag system 10-4
Front Seat Belt without Pretensioner 10-5
Front Seat Belt with Pretensioner 10-6
Rear Seat Belt 10-8
Tightening Torque Specifications 10-8

General Description

There are three types of restraint system used for this vehicle.

	Type 1	Type 2	Type 3
Front seat belt	Seat belt with ELR	Seat belt with ELR	Seat belt with ELR
Rear seat belt	Seat belt with A-ELR	Seat belt with A-ELR	Seat belt with A-ELR
Supplemental restraint system	–	Driver and front passenger air bags	Driver and front passenger air bags
	–	–	Driver and front passenger pretensioners

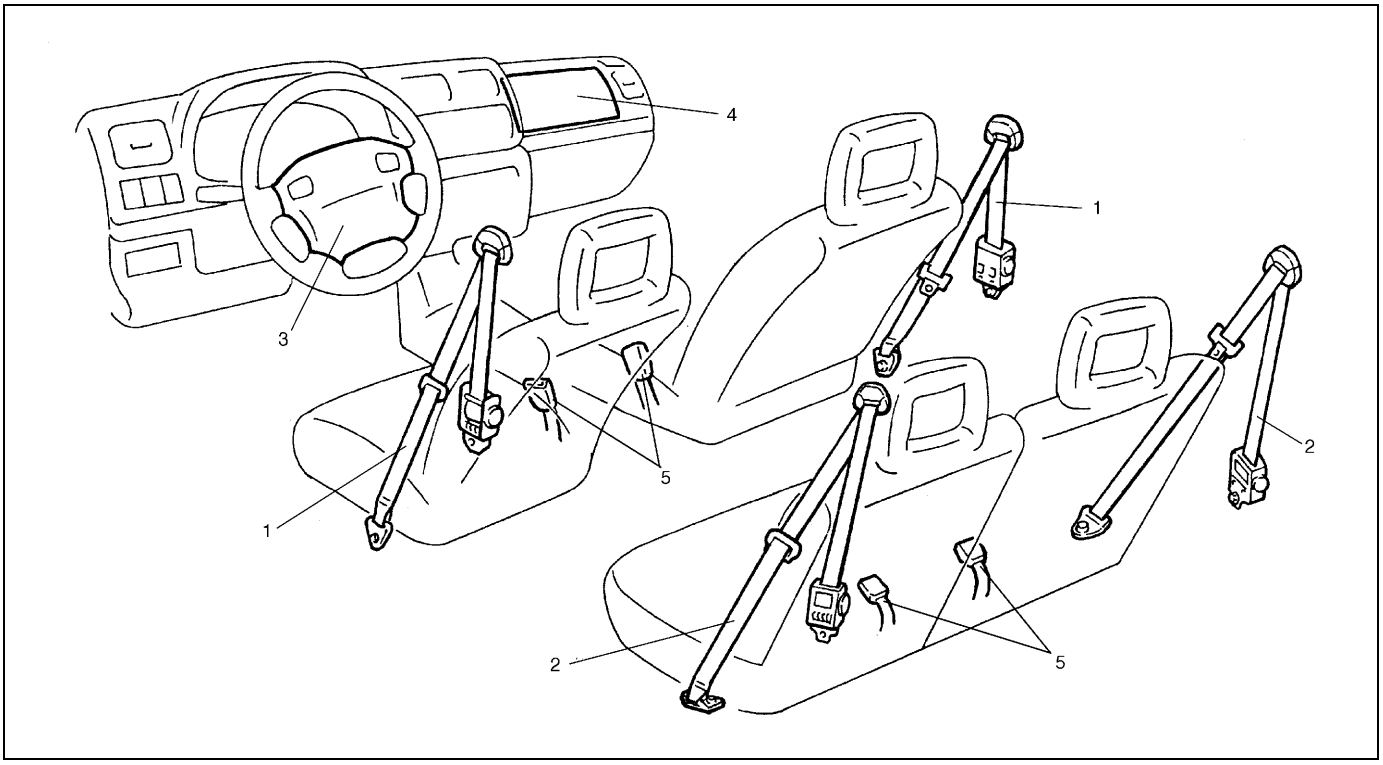

1. Front seat belt	3. Driver side air bag (inflator) module (if equipped)	5. Front seat belt buckle
2. Rear seat belt	4. Passenger air bag (inflator) module (if equipped)	6. Rear seat belt buckle

Seat Belt with ELR

The seat belt with emergency locking retractor (ELR) is designed so that it locks immediately to prevent the webbing from being pulled out of the retractor any further when any of the following items is detected as exceeding each set value.

- Speed at which the webbing is pulled out of the retractor
- Acceleration or deceleration of the vehicle speed
- Inclination

Seat Belt with A-ELR

The Automatic and Emergency Locking Retractor (A-ELR) works as an Emergency Locking Retractor (ELR) till its webbing is pulled all the way out and then on as an Automatic Locking Retractor (ALR) till it is retracted fully.
ALR: Automatically locks when the webbing is pulled out from the retractor and allowed to retract even a little.
Then the webbing can not be pulled out any further, unless it is wound all the way back into the retractor, which releases the lock and allows the webbing to be pulled out.

Seat Belt Pretensioner (If Equipped)

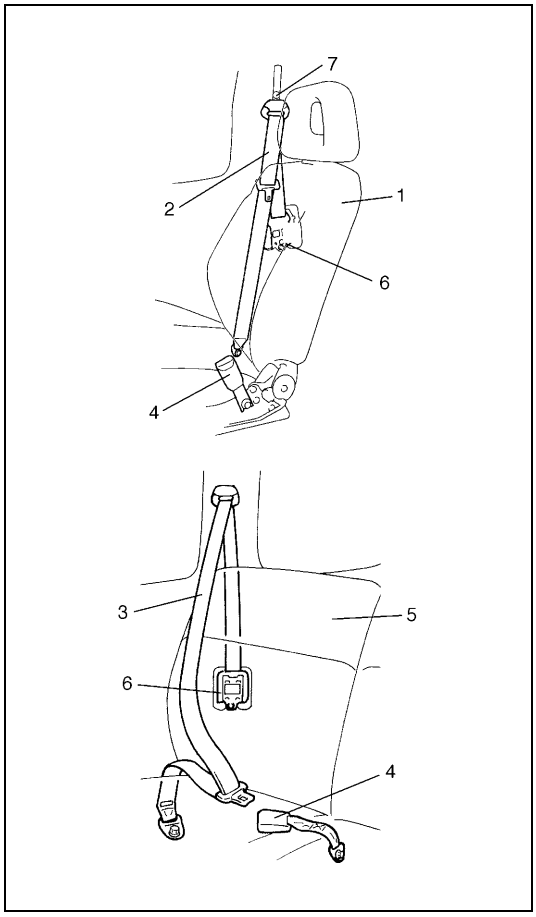

Some seat belts of the driver and front passenger seats are provided with a pretensioner as an optional function unit. The pretensioner is incorporated in retractor assembly (6) and controlled by SDM as one of air bag system components. It will be activated to takes up the sag of the seat belt at the same time as the air bag deployment when an impact at the front of vehicle exceeds the specified value.

When servicing seat belt with pretensioner, be sure to observe all WARNINGS and CAUTIONS in this section and “Service Precautions” in Section 10B.

CAUTION:

Do not reuse the seat belt retractor assembly if pretensioner has been activated. Replace it with a new one as an assembly.

1.	Front seat
2.	Front seat belt
3.	Rear seat belt
4.	Buckle
5.	Rear seat
7.	Shoulder adjuster

Diagnosis

Diagnose air bag system including in seat belt pretensioner referring to “Air Bag Diagnostic System Check“ in Section 10B.

Inspection and Repair Required after Accident

After an accident, whether the seat belt pretensioner has been activated or not, be sure to perform checks, inspections and repairs described on “Repairs and Inspections Required after Accident” in Section 10B.

On-Vehicle Service

Service Precautions

Service and diagnosis

WARNING:

If seat belt replacement is necessary, replace buckle and seat belt together as a set. This is for the reason of ensuring locking of tongue plate with buckle.
If these parts are replaced individually, such a locking condition may become unreliable. For this reason, SUZUKI will supply only the spare buckle and seat belt in a set part.

Before servicing or replacing seat belts, refer to the following precautionary items.

- Seat belts should be normal relative to strap retractor and buckle portions.
- Keep sharp edges and damaging objects away from belts.
- Avoid bending or damaging any portion of belt buckle or latch plate.
- Do not bleach or dye belt webbing. Use only mild soap and lukewarm water to clean it.
- When installing a seat belt anchor bolt, start to tighten the bolt by hand to prevent cross-threading and then to specified torque.
- Do not attempt any repairs on retractor mechanisms or retractor covers. Replace defective assemblies with new replacement parts.
- Keep belts dry and clean at all times.
- If there exist any parts in question, replace such parts.
- Replace belts whose webbing is cut or otherwise damaged.
- Do not put anything into trim panel opening which seat belt webbing passes through.

For seat belt with pretensioner
Refer to “Service and Diagnosis” of “Service Precautions” in Section 10B.

WARNING:

When performing service on or around air bag system components or air bag system wiring, disable the air bag system referring to “Disabling Air Bag System” in Section 10B.
Failure to follow procedures could result in possible air bag activation, personal injury or unneeded air bag system repairs.

Disabling air bag system for vehicle with air bag system

Refer to “Disabling Air Bag System” in Section 10B.

Enabling air bag system for vehicle with air bag system

Refer to “Enabling Air Bag System” in Section 10B.

Handling and storage for vehicle with air bag system

Refer to “Handling and Storage” in Section 10B.

Disposal for vehicle with air bag system

Refer to “Disposal” in Section 10B.

Front Seat Belt without Pretensioner

WARNING:

Be sure to read "Service Precautions" before starting to work and observe every precaution during work.

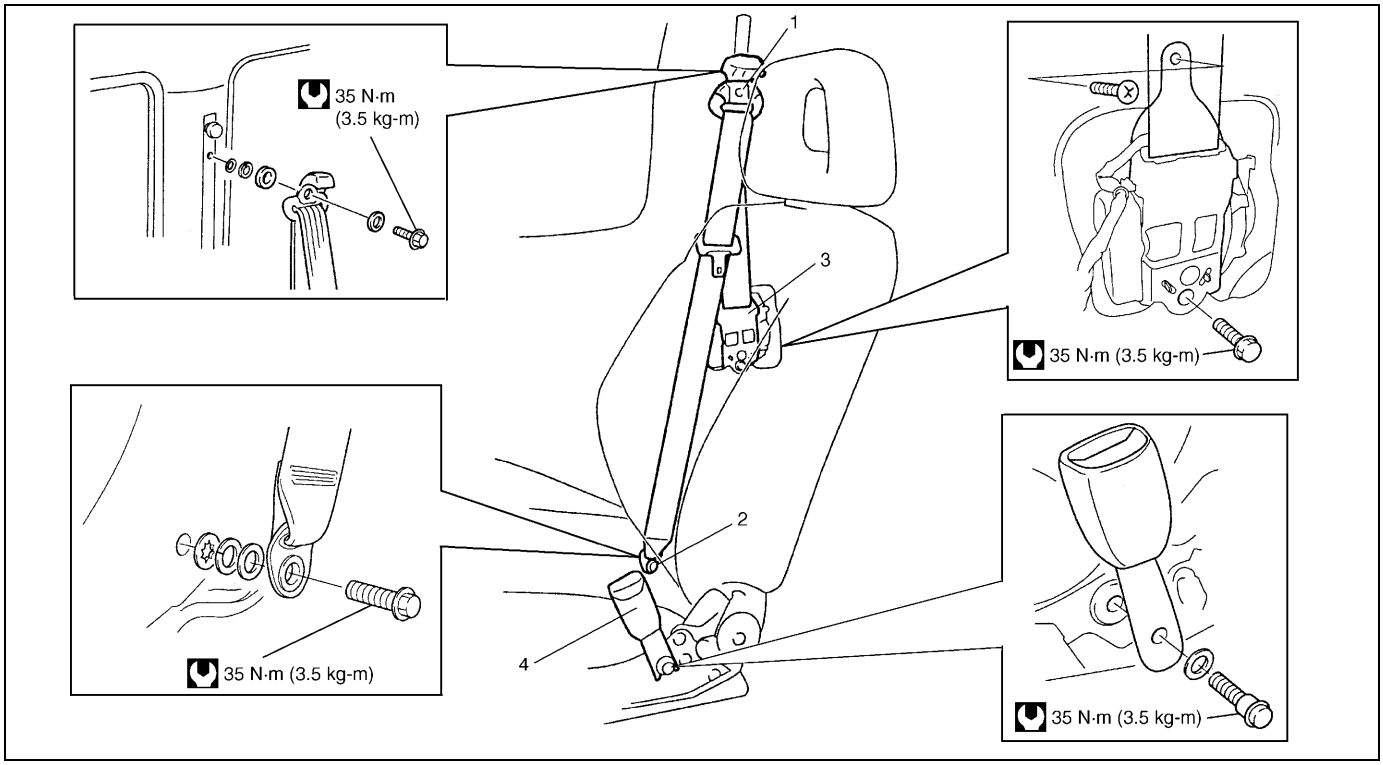

1. Upper anchor	3. Retractor assembly	Tightening torque
2. Lower anchor	4. Buckle	

INSPECTION BEFORE REMOVAL

Seat belts and attaching parts can affect the vital components and systems of a vehicle.
Therefore, they should be inspected carefully and replaced with genuine parts only.

Anchor Bolt

Anchor bolts should be torqued to specification.

Belt Latch

It should be secure when latched.

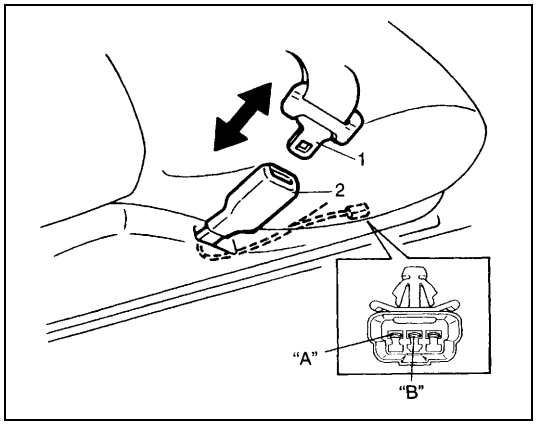

Warning System (if equipped)

Check driver's seat belt strap switch for continuity by ohmmeter.

Seat belt strap switch specification
Without inserted buckle tongue to buckle catch :
Terminal "A" and "B" : Continuity
With inserted buckle tongue to buckle catch :
Terminal "A" and "B" : No continuity (∞ Ω)

1. Buckle tongue	
2. Buckle catch	

REMOVAL

Refer to the component figure to remove front seat belts.

INSPECTION

Seat belts and attaching parts can affect the vital components and systems of a vehicle.
Therefore, they should be inspected carefully and replaced with genuine parts only.

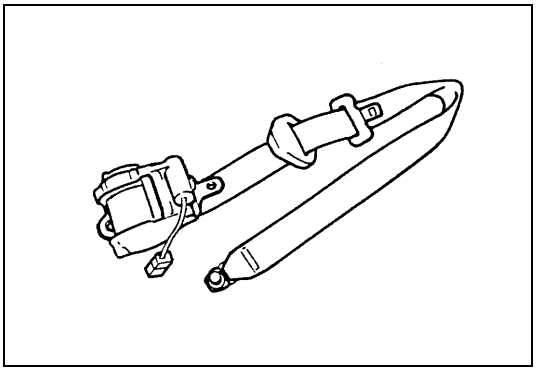

Seat Belt

Its webbing or strap should be free from damage.

Retractor Assembly

It should lock webbing when pulled quickly.
The front seat belt retractor assembly should pass the above inspection and should lock webbing even when tilted (approx. 15°) toward the fore and aft or right and left directions.

INSTALLATION

Install in reverse order of removal, noting the following.

- Seat belt anchor bolts should have an unified fine thread (7/16 – 20 UNF). Under no circumstances should any different sized or metric screw threads be used.
- Be sure to tighten seat belt anchor bolts to specified torque referring to previous figure.

Front Seat Belt with Pretensioner

WARNING:

- **Do not attempt to disassemble or repair the seat belt pretensioner (retractor assembly). If any abnormality is found, be sure to replace it with new one as an assembly.**
- **Be sure to read “Service Precautions” in this section, before starting to work and observe every precaution during work. Neglecting them may result in personal injury or unactivation of the seat belt pretensioner when necessary.**

INSPECTION BEFORE REMOVAL

When checking seat belt with pretensioner, refer to “Inspection before Removal” under “Front Seat Belt without Pretensioner” in this section.

REMOVAL

1) Disconnect negative battery cable from battery.
2) Disable air bag system referring to “Disabling Air Bag System” in Section 10B.
3) Disconnect Yellow connector for seat belt pretensioner.
4) Remove front seat belts from vehicle referring to “Front Seat Belt without Pretensioner” in this section.

INSPECTION

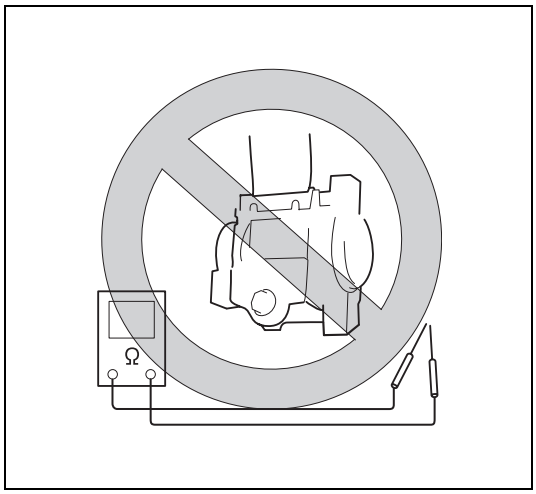

When checking seat belt with pretensioner, use the following check items in addition to those specified for seat belt without pretensioner described in “Inspection” under “Front Seat Belt without Pretensioner” in this section.

WARNING:

Do not measure resistance of pretensioner or disassemble it. Otherwise, personal injury may result.

CAUTION:

If seat belt pretensioner (retractor assembly) was dropped from a height of 90 cm (3 ft) or more, it should be replaced.

Check retractor assembly with seat belt pretensioner appearance visually for the following symptoms and if any one of them is applicable, replace it with a new one as an assembly.

- Seat belt pretensioner has activated.
- There is a crack in seat belt pretensioner (retractor assembly).
- Wire harness or connector is damaged.
- Seat belt pretensioner (retractor assembly) is damaged or a strong impact (e.g., dropping) was applied to it.

INSTALLATION

1) Install front seat belts to vehicle referring to “Front Seat Belt without Pretensioner” in this secton.
2) Connect Yellow connector for seat belt pretensioner securely.
3) Connect negative battery cable to battery.
4) Enable air bag system referring to “Enabling Air Bag System” in Section 10B.

Rear Seat Belt

WARNING:

Be sure to read "Service Precautions" in this section before starting to work and observe every precaution during work.

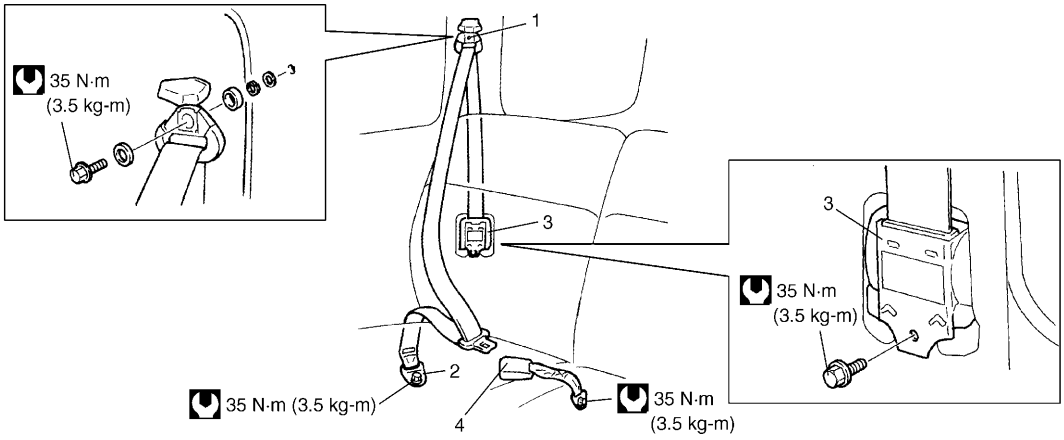

1. Upper anchor	3. Retractor assembly
2. Lower anchor	4. Buckle

INSPECTION BEFORE REMOVAL

Check the rear seat belt in the same way as when inspecting front seat belt without pretensioner referring to "Inspection before Removal" under "Front Seat Belt without Pretensioner" in this section.

REMOVAL

Refer to the component figure to remove rear seat belts.

INSPECTION

Check the rear seat belt in the same way as when inspecting front seat belt without pretensioner referring to "Inspection" under "Front Seat Belt without Pretensioner" in this secton.

INSTALLATION

Install the rear seat belt observing the same precautions as when installing front seat belt without pretensioner referring to "Front Seat Belt without Pretensioner" in this section.

- Be sure to tighten seat belt anchor bolts to specified torque as shown in the figure.

Tightening Torque Specifications

Fastening part	Tightening torque		
	N•m	kg-m	lb-ft
Upper and lower anchor bolt	35	3.5	25.5
Retractor assembly bolt	35	3.5	25.5
Buckle bolt	35	3.5	25.5

SECTION 10B

AIR BAG SYSTEM

WARNING:

- **Service on or around the air bag system components or wiring must be performed only by an authorized SUZUKI dealer. Please observe all WARNINGS and "Service Precautions" under "On-Vehicle Service" in this section before performing service on or around the air bag system components or wiring. Failure to follow WARNINGS could result in unintended activation of the system or could render the system inoperative. Either of these two conditions may result in severe injury.**
- **The procedures in this section must be followed in the order listed to disable the air bag system temporarily and prevent false diagnostic trouble codes from setting. Failure to follow procedures could result in possible activation of the air bag system, personal injury or otherwise unneeded air bag system repairs.**

CAUTION:

When fasteners are removed, always reinstall them at the same location from which they were removed. If a fastener needs to be replaced, use the correct part number fastener for that application. If the correct part number fastener is not available, a fastener of equal size and strength (or stronger) may be used. Fasteners that are not reused, and those requiring thread-locking compound, will be called out. The correct torque value must be used when installing fasteners that require it. If the above conditions are not followed, parts or system damage could result.

CONTENTS

General Description 10B-3
System Components and Wiring Location View and Connectors 10B-4
System Wiring Diagram 10B-5
Diagnosis 10B-6
Diagnostic Trouble Code (DTC) 10B-6
Use of Special Tool 10B-6
Intermittents and Poor Connections 10B-8
Air Bag Diagnostic System Check 10B-9
Air Bag Diagnostic System Check Flow Table 10B-10
DTC Check 10B-11
DTC Clearance 10B-12
DTC Table 10B-13
"AIR BAG" Warning Lamp Circuit Trouble Diagnosis Table 10B-15
"AIR BAG" warning lamp comes on steady 10B-16
"AIR BAG" warning lamp does not come on 10B-17
"AIR BAG" warning lamp flashes 10B-19
"AIR BAG" warning lamp can not indicate flashing 10B-20
SDM Serial Data Circuit Toruble Diagnosis Table 10B-21
DTC B1015 – Passenger Air Bag Initiator Circuit Resistance High 10B-23
DTC B1016 – Passenger Air Bag Initiator Circuit Resistance Low 10B-23
DTC B1018 – Passenger Air Bag Initiator Circuit Short to Ground 10B-23
DTC B1019 – Passenger Air Bag Initiator Circuit Short to Power Circuit 10B-23
DTC B1021 – Driver Air Bag Initiator Circuit Resistance High 10B-28
DTC B1022 – Driver Air Bag Initiator Circuit Resistance Low 10B-28
DTC B1024 – Driver Air Bag Initiator Circuit Short to Ground 10B-28
DTC B1025 – Driver Air Bag Initiator Circuit Short to Power Circuit 10B-28
DTC B1032 – Power Source Voltage Low 10B-35
DTC B1041 – Driver Pretensioner Initiator Circuit Resistance High 10B-37
DTC B1042 – Driver Pretensioner Initiator Circuit Resistance Low 10B-37

DTC B1043 – Driver Pretensioner Initiator Circuit Short to Ground 10B-37
DTC B1044 – Driver Pretensioner Initiator Circuit Short to Power Circuit..... 10B-37
DTC B1045 – Passenger Pretensioner Initiator Circuit Resistance High..... 10B-37
DTC B1046 – Passenger Pretensioner Initiator Circuit Resistance Low..... 10B-37
DTC B1047 – Passenger Pretensioner Initiator Circuit Short to Ground 10B-37
DTC B1048 – Passenger Pretensioner Initiator Circuit Short to Power Circuit 10B-37
DTC B1051 – Frontal Crash Detected (System Activation Command Outputted) 10B-46
DTC B1071 – Internal SDM Fault 10B-47
DTC B1013 – System Specifications Different from SDM Specifications 10B-47

On-vehicle Service..... 10B-48

Service Precautions 10B-48
Service and diagnosis 10B-48
Disabling air bag system 10B-49
Enabling air bag system..... 10B-49
Handling and storage 10B-50
Disposal 10B-54
Air bag wire harness and connector in instrument panel harness, floor harness and pretensioner harness..... 10B-54
Repairs and Inspections Required after an Accident 10B-55
Accident with Deployment/Activation - Component Replacement 10B-55
Accident with or without Deployment/ Activation - Component Inspections 10B-55
SDM 10B-58
Passenger Air Bag (Inflator) Module..... 10B-59
Driver Air Bag (Inflator) Module 10B-60
Contact Coil and Combination Switch Assembly 10B-60
Seat Belt Pretensioner 10B-60

Air Bag (Inflator) Module and Seat Belt Pretensioner Disposal..... 10B-61

Deployment/Activation Outside of Vehicle 10B-62
Deployment/Activation Inside Vehicle..... 10B-69
Deployed Air Bag (Inflator) Module and Activated Seat Belt Pretensioner Disposal 10B-73

Tightening Torque Specification..... 10B-74

Special Tool 10B-74

General Description

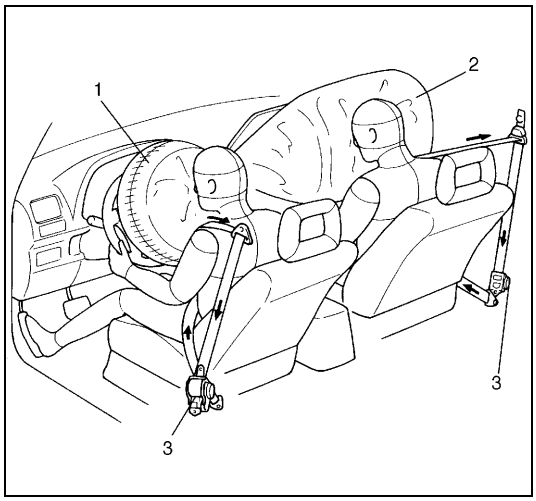

With the air bag system which includes air bags for both the driver's and passenger's sides as well as the seat belt pretensioners, the sag of the seat belt is taken up (for seat belt with pretensioner), the driver air bag (inflator) module is deployed from the center of the steering column and the passenger air bag (inflator) module from the top of the instrument panel in front of the front passenger seat in occurrence of a front collision with an impact larger than a certain set value to supplement protection offered by the driver and front passenger seat belts.

1.	Driver side air bag
2.	Passenger side air bag
3.	Seat belt pretensioner

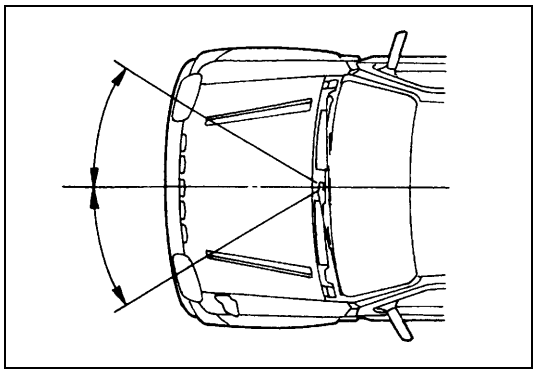

The air bag system is designed to activate only in severe frontal collisions. It is not designed to activate in rear impacts, side impacts, rollovers, or minor frontal collisions, since it would offer no protection in those types of accidents.

System Components and Wiring Location View and Connectors

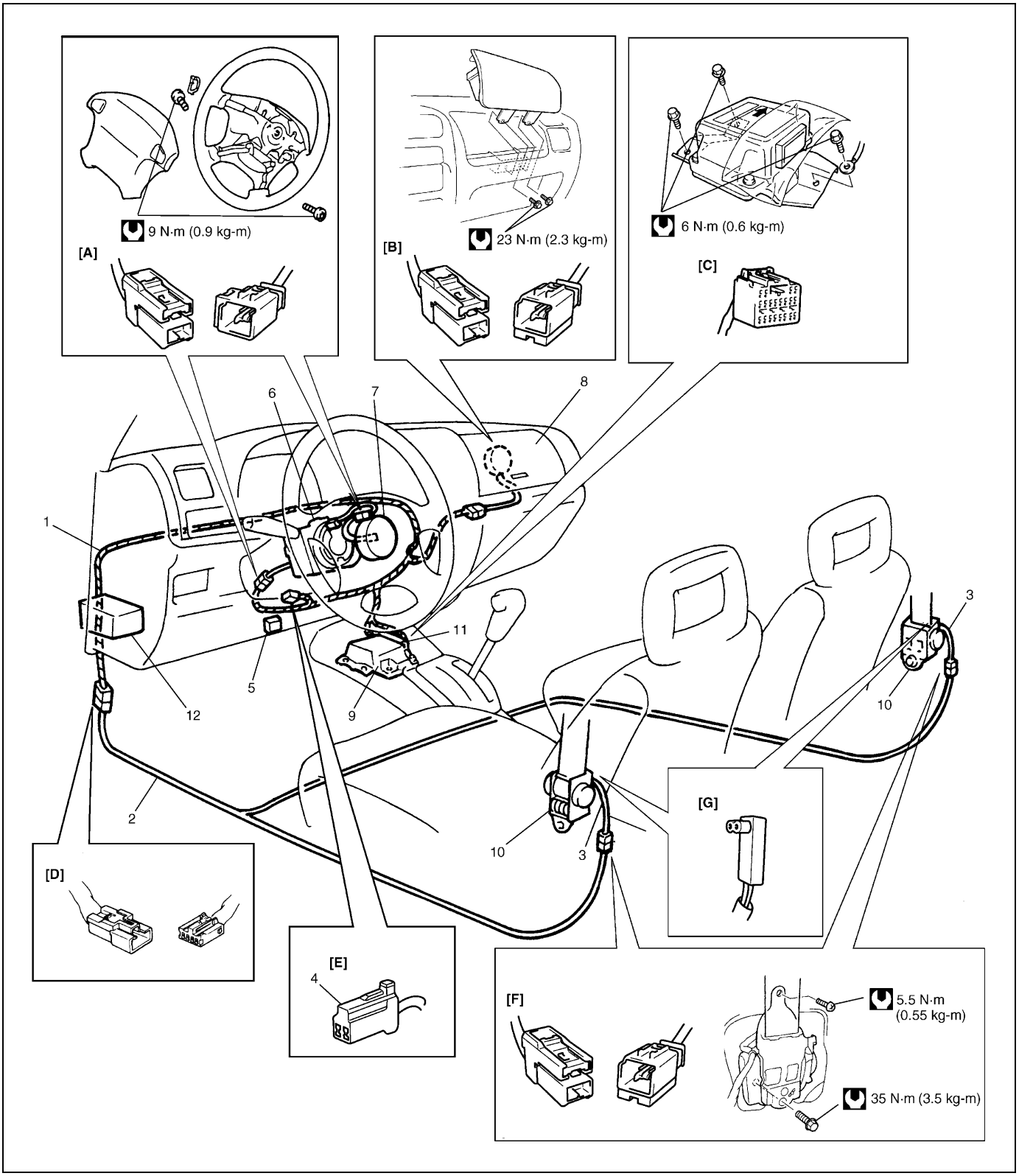

[A] : Connector “G62”, “G70”	1. Air bag harness in instrument panel harness	8. Passenger air bag (inflator) module
[B] : Connector “G61”	2. Air bag harness in floor harness	9. SDM
[C] : Connector “Q60”	3. Air bag harness in seat belt pretensioner harness	10. Seat belt pretensioner (retractor assembly)
[D] : Connector “L30”	4. “Air bag” monitor coupler	11. Ground for air bag system
[E] : Connector “G63”	5. DLC	12. “AIR BAG” fuse in circuit fuse box
[F] : Connector “Q07”, “Q09”	6. Contact coil assembly	
[G] : Connector “Q08”, “Q10”	7. Driver air bag (inflator) module	

System Wiring Diagram

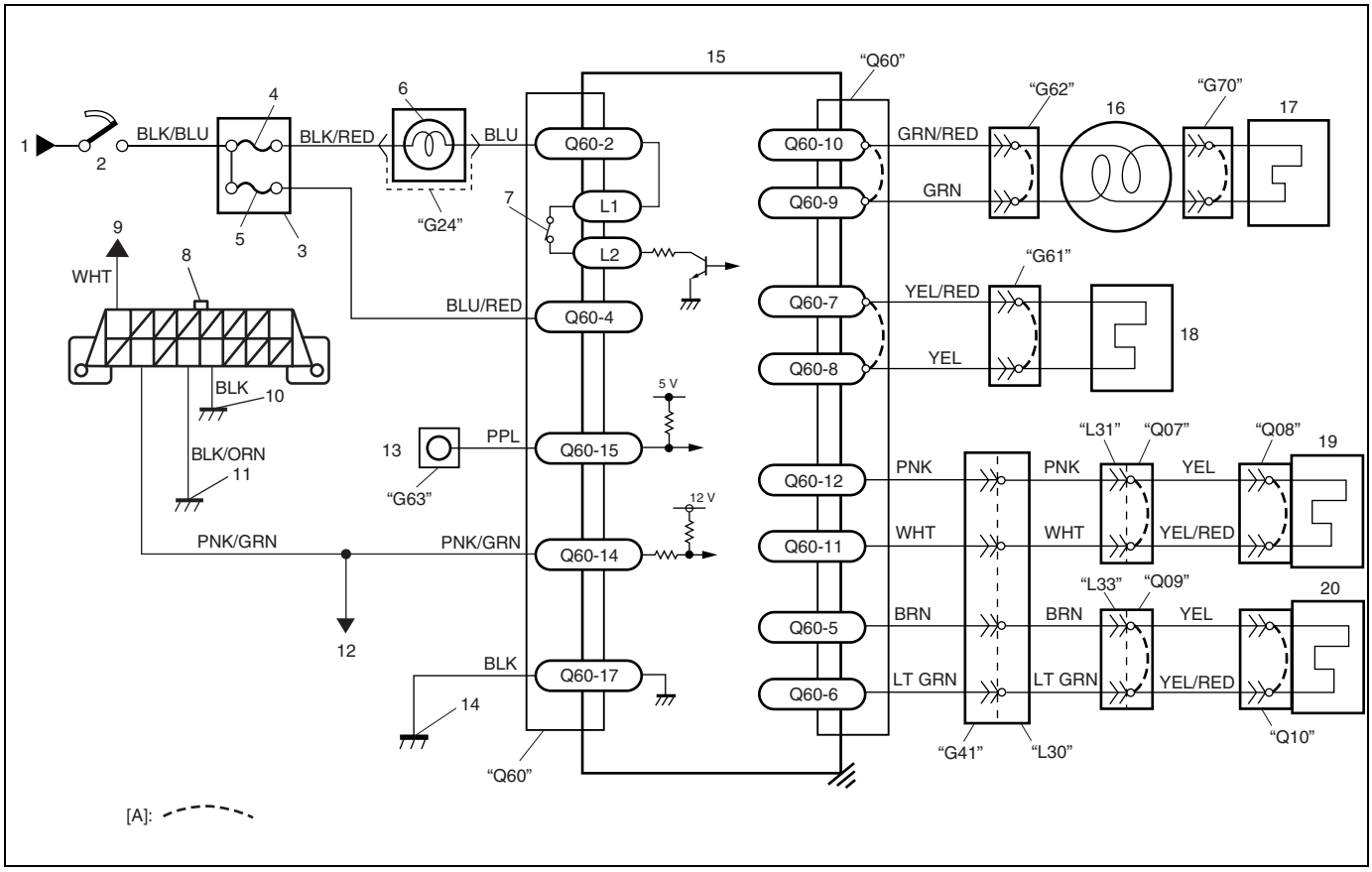

[A] : Shorting bar	7. Connection detection pin	14. Ground for air bag system
1. To main fuse box	8. Data link connector (DLC)	15. SDM
2. Ignition switch	9. To circuit fuse box	16. Contact coil assembly
3. Circuit fuse box	10. Ground on body	17. Driver air bag (inflator) module
4. "METER" fuse	11. Ground on engine block	18. Passenger air bag (inflator) module
5. "AIR BAG" fuse	12. To ECM, TCM and ABS control module (if equipped)	19. Driver seat belt pretensioner
6. "AIR BAG" warning lamp in combination meter	13. "AIR BAG" monitor coupler	20. Passenger seat belt pretensioner

TERMINAL ARRANGEMENT OF SDM CONNECTOR "Q60" VIEWED FROM HARNESS SIDE

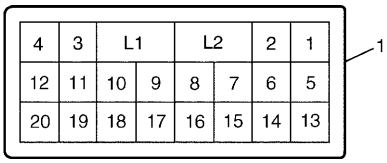

1. SDM connector "Q60"

SDM connector “Q60” terminal description

TERMINAL	CIRCUIT		TERMINAL	CIRCUIT	
Q60-1	–		Q60-11	Driver pretensioner	Low
Q60-2	“AIR BAG” warning lamp		Q60-12		High
Q60-3	–		Q60-13	–	
Q60-4	Ignition switch (power source)		Q60-14	Data link connector (DLC)	
Q60-5	Passenger pretensioner	High	Q60-15	Diagnosis switch	
Q60-6		Low	Q60-16	–	
Q60-7	Passenger air bag (inflator) module	High	Q60-17	Ground	
Q60-8		Low	Q60-18	–	
Q60-9	Driver air bag (inflator) module	Low	Q60-19	–	
Q60-10		High	Q60-20	–	

Diagnosis

WARNING:

To avoid deployment when troubleshooting the air bag system, do not use electrical test equipment such as a battery powered or AC powered voltmeter, ohmmeter, etc., or any type of electrical equipment other than that specified in this manual. Do not use a non-powered probe type tester. Instructions in this manual must be followed carefully, otherwise personal injury may result.

Diagnostic Trouble Code (DTC)

The “Air Bag Diagnostic System Check” must always be the starting point of any air bag system diagnosis. The “Air Bag Diagnostic System Check” checks for proper “AIR BAG” warning lamp operation and checks for air bag diagnostic trouble codes using on-board diagnosis function or SUZUKI scan tool.

Use of Special Tool

WARNING:

To avoid deployment when troubleshooting the air bag system, do not use electrical test equipment such as a battery powered or AC powered voltmeter, ohmmeter, etc., or any type of electrical equipment other than that specified in this manual. Do not use a non-powered probe type tester. Instructions in this manual must be followed carefully, otherwise personal injury may result.

You should be familiar with the tools listed in this section under the heading “Special Tool”. You should be able to measure voltage and resistance. You should be familiar with proper use of a scan tool such as Air Bag Driver/ Passenger Load Tool, Adapter cable, Connector Test Adapter Kit and the Digital Multimeter.

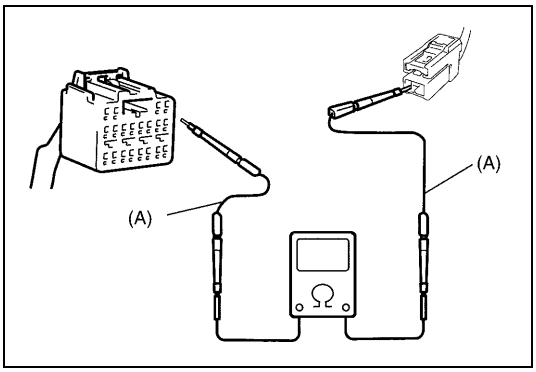

Special tool
(A) : 09932-76010 (Connector Test Adapter Kit)

This must be used whenever a diagnostic procedure requests checking or probing a terminal.
Using the appropriate adapter in the special tool will ensure that no damage to the terminal will occur from the multimeter probe, such as spreading or bending.

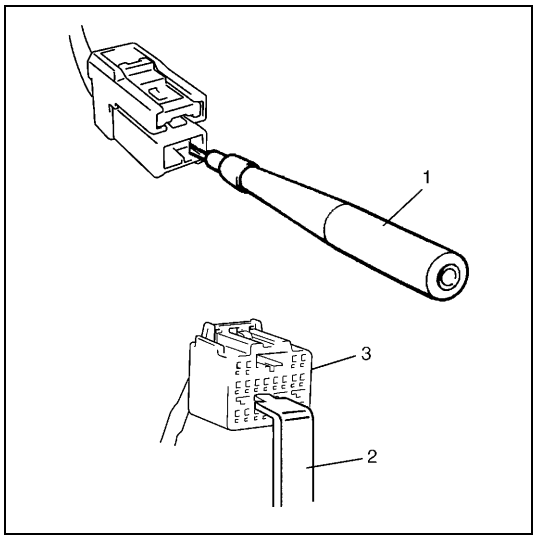

The adapter (1) will also give an idea of whether contact tension is sufficient, helping to find an open or intermittent open due to poor terminal contact.

An SDM short bar release tool (2) is included in the connector test adapter kit.

Inserting it into the SDM connector (3) will release the shorting bar.

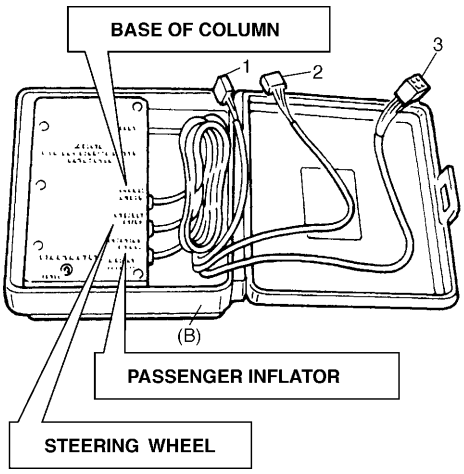

Special tool
(B) : 09932-75010 (Air Bag Driver/Passenger Load Tool)

This tool is used only when called for in this section. It is used as a diagnostic aid and safety device to prevent inadvertent air bag (inflator) module deployment.
The load tool has three connectors attached to its case which are electrically functional and serve as resistive load substitutions.
No more than two connectors are used at any time.

One of connectors (“STEERING WHEEL”) is used to substitute the load of the followings.

- Driver air bag (inflator) module when it is connected at the top of the column to the contact coil assembly.
- Passenger air bag (inflator) module when it is connected to the air bag harness connector for passenger air bag (inflator) module.
- Each of driver and passenger seat belt pretensioners when it is connected to air bag harness connector for driver and passenger seat belt pretensioners.

Another connector (“BASE OF COLUMN”) is used to substitute the load of the driver air bag (inflator) module and the contact coil assembly when it is connected at the base of the column to the air bag wire harness.
The third connector (“PASSENGER INFLATOR”) is not used.

By substituting the resistance of the load tool when called for, a determination can be made as to whether an inflator circuit component is causing system malfunction and which component is causing the malfunction.
The load tool should be used only when specifically called for in the diagnostic procedures.

1.	Connector for contact coil and driver air bag (inflator) module (Located near the base of the steering column)
2.	Connector for driver, passenger air bag (inflator) module and driver and passenger seat belt pretensioners
3.	Not used

Intermittents and Poor Connections

Most intermittents are caused by faulty electrical connections or wiring. When a check for proper connection is requested in a diagnostic flow table, perform careful check of suspect circuits for:

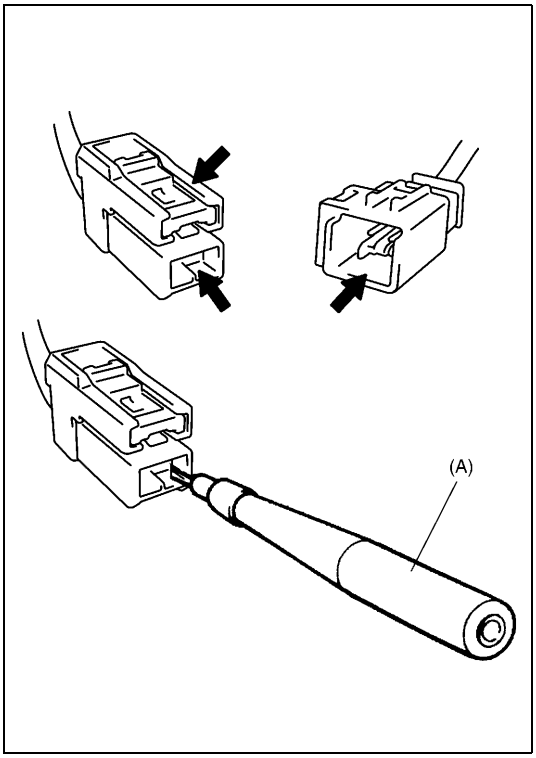

- Poor mating of connector halves, or terminals not fully seated in the connector body (backed out).
- Dirt or corrosion on the terminals. The terminals must be clean and free of any foreign material which could impede proper terminal contact.
  However, cleaning the terminal with a sand paper or the like is prohibited.
- Damaged connector body, exposing the terminals to moisture and dirt, as well as not maintaining proper terminal orientation with the component or mating connector.
- Improperly formed or damaged terminals.
  Check each connector terminal in problem circuits carefully to ensure good contact tension by using the corresponding mating terminal included in the connector test adapter kit (special tool).
  If contact tension is not enough, reform it to increase contact tension or replace.

Special tool
(A) : 09932-76010 (Connector Test Adapter Kit)

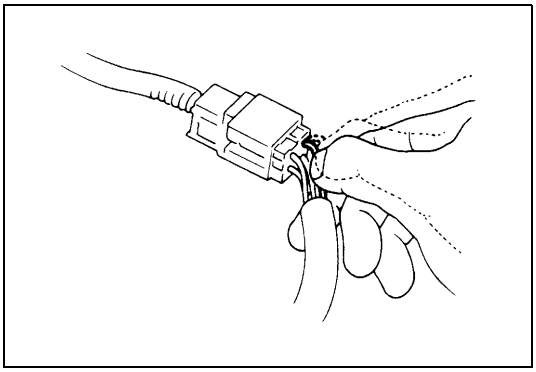

- Poor terminal-to-wire connection.
  Check each wire harness in problem circuits for poor connection by shaking it by hand lightly. If any abnormal condition is found, change the wire harness assembly or component parts with new ones.

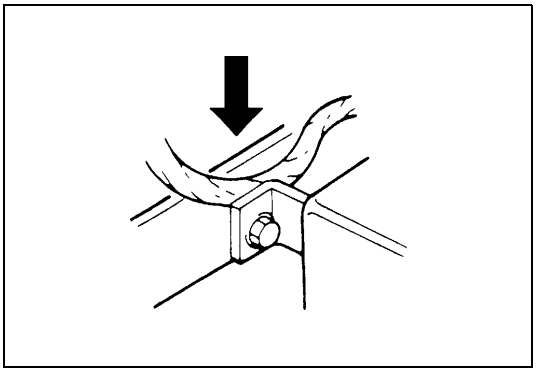

- Wire insulation which is rubbed through, causing an intermittent short as the bare area touches other wiring or parts of the vehicle.
- Wire broken inside the insulation. This condition could cause a continuity check to show a good circuit, but if only 1 or 2 strands of a multi-strand-type wire are intact, resistance could be far too high.

If any abnormality is found, repair or replace as a wire harness assembly.

Air Bag Diagnostic System Check

WARNING:

To avoid deployment when troubleshooting the air bag system, do not use electrical test equipment such as a battery powered or AC powered voltmeter, ohmmeter, etc., or any type of electrical equipment other than that specified in this manual. Do not use a non-powered probe type tester. Instructions in this manual must be followed carefully, otherwise personal injury may result.

CAUTION:

The order in which diagnostic trouble codes are diagnosed is very important. Failure to diagnose the diagnostic trouble codes in the order specified may result in extended diagnostic time, incorrect diagnosis and incorrect parts replacement.

The diagnostic procedures used in this section are designed to find and repair air bag system malfunctions. To get the best results, it is important to use the diagnostic flow tables and follow the sequence listed below.

1) Perform the “Air Bag Diagnostic System Check Flow Table” in this section.
   (The “Air Bag Diagnostic System Check Flow Table” must be the starting point of any air bag system diagnosis.
   The “Air Bag Diagnostic System Check Flow Table” checks for proper “AIR BAG” warning lamp operation through “AIR BAG” warning lamp and whether air bag diagnostic trouble codes exist.)
2) Refer to the proper diagnostic table as directed by the “Air Bag Diagnostic System Check Flow Table” in this section.
   (The “Air Bag Diagnostic System Check Flow Table” will lead you to the correct table to diagnose any air bag system malfunctions. Bypassing these procedures may result in extended diagnostic time, incorrect diagnosis and incorrect parts replacement.)
3) Repeat the “Air Bag Diagnostic System Check Flow Table” after any repair or diagnostic procedures have been performed.
   (Performing the “Air Bag Diagnostic System Check Flow Table” after all repair or diagnostic procedures will ensure that the repair has been made correctly and that no other malfunctions exist.)

FLOW TABLE TEST DESCRIPTION

STEP 1 : Check that “AIR BAG” warning lamp lights.
STEP 2 : Check that “AIR BAG” warning lamp lights.
STEP 3 : Check diagnosis switch circuit.
STEP 4 : Check that “AIR BAG” warning lamp flashes 6 times after ignition switch is turned ON.
STEP 6 : Check that history codes are in SDM memory. (using SUZUKI scan tool)
STEP 7 : Check that history codes are in SDM memory. (using monitor coupler)
STEP 9 : Check that current code is in SDM memory. (using SUZUKI scan tool)
STEP 10 : Check that current code is in SDM memory. (using monitor coupler)

Air Bag Diagnostic System Check Flow Table

Step	Action	Yes	No
1	1) Make sure that battery voltage is about 11V or higher. 2) Note “AIR BAG” warning lamp as ignition switch is turned to ON position. Does “AIR BAG” warning lamp come ON?	Go to step 2.	Proceed to ““AIR BAG” Warning Lamp Does Not Come On” in this section.
2	Does “AIR BAG” warning lamp come ON steady?	Proceed to ““AIR BAG” Warning Lamp Comes On Steady” in this section.	Go to step 3.
3	Does “AIR BAG” warning lamp keep flashing (indicating DTC) when ignition switch is ON?	Proceed to ““AIR BAG” Warning Lamp Flashes” in this section.	Go to step 4.
4	Does “AIR BAG” warning lamp turn OFF after flashing 6 times?	Go to step 5.	Go to step 8.
5	Do you have SUZUKI scan tool?	Go to step 6.	Go to step 7.
6	1) Check DTC referring to “Using SUZUKI Scan Tool” under “DTC Check” in this section. Is “NO CODES” displayed on SUZUKI scan tool?	Air bag system is in good condition.	An intermittent trouble has occurred at some place. Check the connector harness, etc. related to the sensed DTC. Refer to “Intermittent and Poor Connections” in this section. Then clear DTC referring to “DTC Clearance” in this section, and repeat this table.
7	1) Check DTC referring to “Not Using SUZUKI Scan Tool” under “DTC Check” in this section. Is flashing pattern No. 12 indicated on “AIR BAG” warning lamp?	Air bag system is in good condition.	An intermittent trouble has occurred at some place. Check the connector harness, etc. related to the sensed DTC. Refer to “Intermittent and Poor Connections” in this section. Then clear DTC referring to “DTC Clearance” in this section, and repeat this table.
8	Do you have SUZUKI scan tool?	Go to step 9.	Go to step 10.
9	1) Check DTC referring to “Using SUZUKI Scan Tool” under “DTC Check” in this section. Is “NO CODES” displayed on SUZUKI scan tool?	Substitute a known-good SDM and recheck.	Check and repair according to corresponding DTC flow table.
10	1) Check DTC referring to “Not Using SUZUKI Scan Tool” under “DTC Check” in this section. Is flashing pattern No. 12 indicated on “AIR BAG” warning lamp?	Substitute a known-good SDM and recheck.	Check and repair according to corresponding DTC flow table.

DTC Check

Using SUZUKI Scan Tool

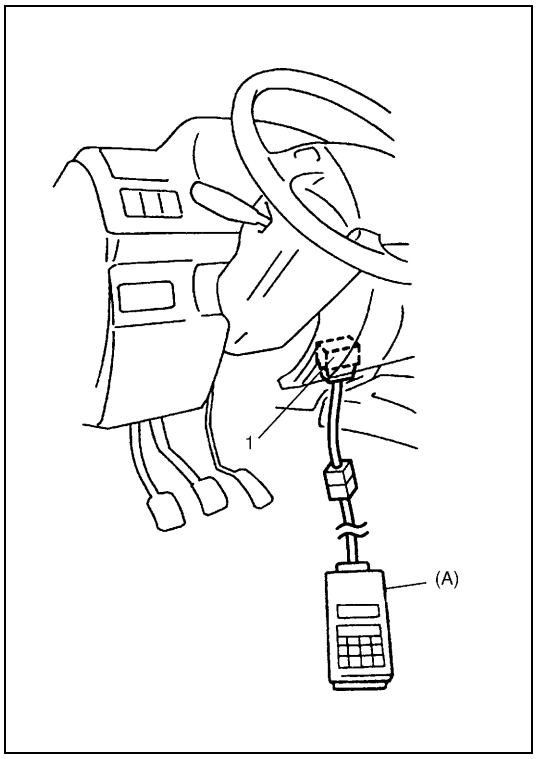

1) Turn ignition switch to OFF position.
2) After setting SUZUKI scan tool, connect it to data link connector (DLC) located on underside of instrument panel at driver's seat side.

Special tool
(A) : SUZUKI scan tool

3) Turn ignition switch to ON position.
4) Read DTC according to instructions displayed on SUZUKI scan tool and print it or write it down referring to SUZUKI scan tool operator's manual for further details.
   If communication between scan tool and SDM is not possible, proceed to "SDM Serial Data Circuit Trouble Diagnosis Table" in this section.
5) After completing the check, turn ignition switch to OFF position and disconnect SUZUKI scan tool from data link connector (DLC).

1. Data link connector (DLC)

Not Using SUZUKI Scan Tool

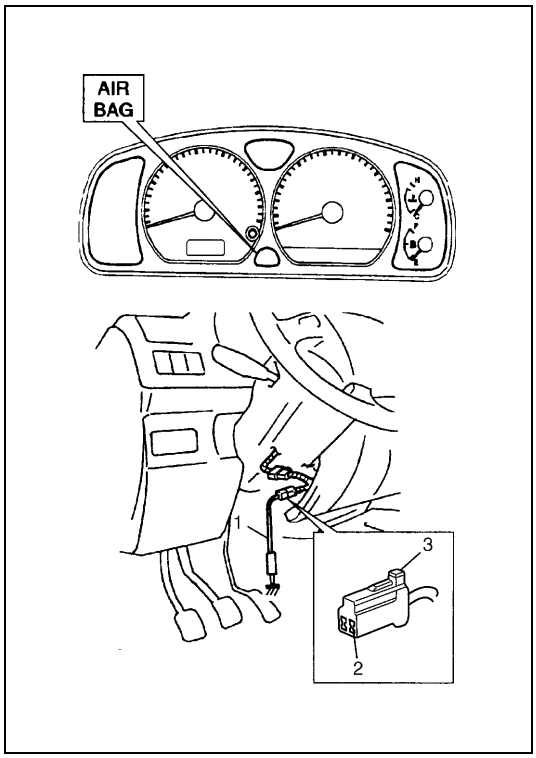

1) Check that "AIR BAG" warning lamp comes ON when ignition switch is turned to ON position.
   If it does not come "ON", proceed to ""AIR BAG" Warning Lamp Does Not Come On" in this section.
2) Using service wire (1), ground diagnosis switch terminal (2) in monitor coupler (3).
3) Read DTC from flashing pattern of "AIR BAG" warning lamp referring to "DTC TABLE" in this section.
   If lamp does not indicate DTC, proceed to ""AIR BAG" Warning Lamp Can Not Indicate Flashing" in this section.
4) After completing the check, turn ignition switch to OFF position and disconnect service wire from "AIR BAG" monitor coupler.

EXAMPLE : When driver air bag initiator circuit resistance high (DTC B1021) is set

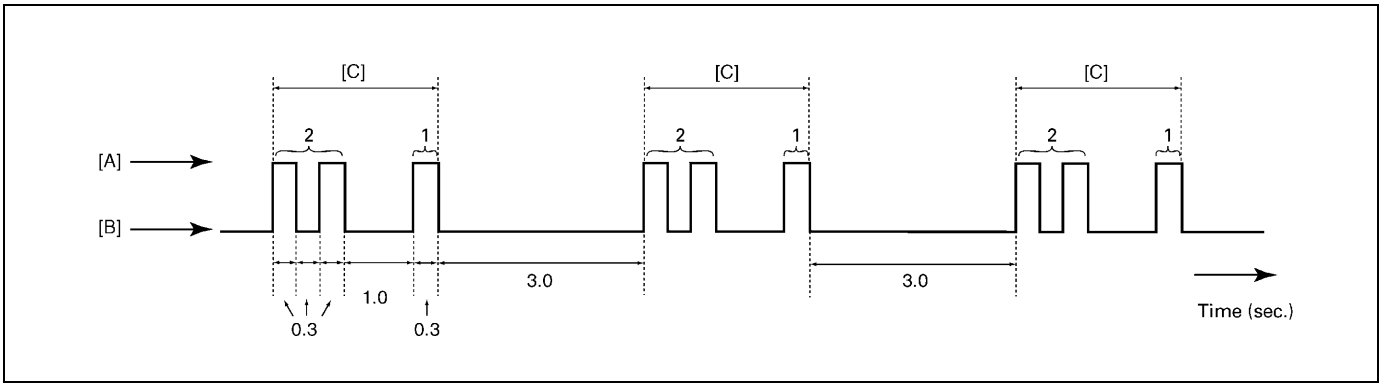

[A] :	"AIR BAG" warning lamp is turned ON
[B] :	"AIR BAG" warning lamp is turned OFF
[C] :	Code No.21

DTC Clearance

Using SUZUKI Scan Tool

1) Turn ignition switch to OFF position.
2) Connect SUZUKI scan tool to data link connector (DLC) in the same manner as when making this connection for DTC check.

Special tool
(A) : SUZUKI scan tool

3) Turn ignition switch to ON position.
4) Erase DTC according to instructions displayed on SUZUKI scan tool.
   Refer to SUZUKI scan tool operator's manual for further details.
5) After completing the check, turn ignition switch to OFF position and disconnect SUZUKI scan tool from DLC.
6) Perform "DTC Check" in this section, and confirm that normal DTC ("NO CODES") is displayed and not malfunction DTC.

NOTE:

If DTC B1051 or DTC B1071 is stored in SDM, it is not possible to clear DTC.

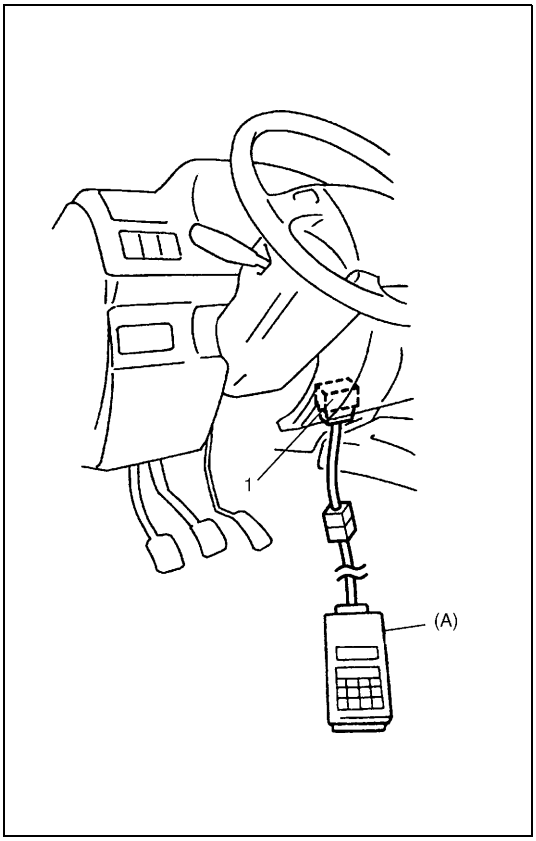

1. Data link connector (DLC)

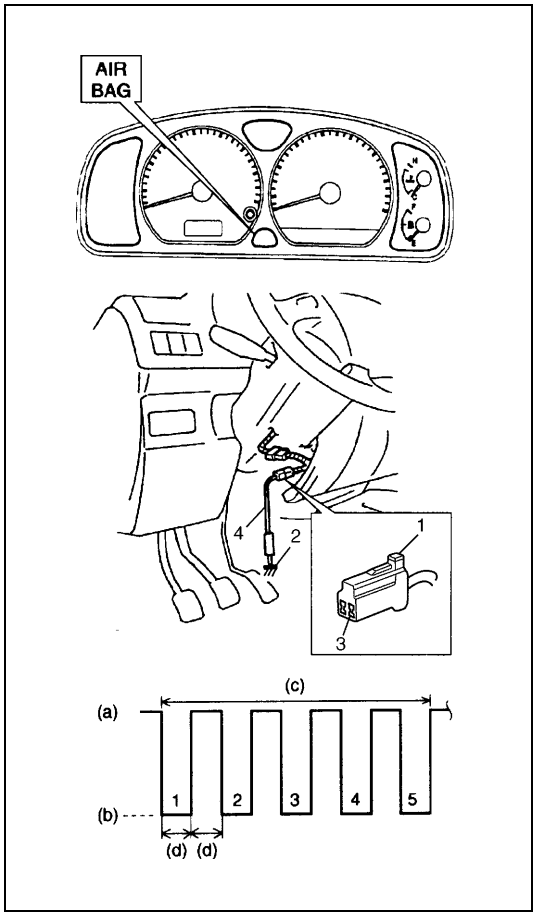

Not Using SUZUKI Scan Tool

1) Turn ignition switch to ON position and wait about 6 seconds or more.
2) Using service wire, repeat shorting and opening between diagnosis switch terminal on “AIR BAG” monitor coupler and body ground 5 times at about 1 second intervals.
3) Perform “DTC Check” in this section, and confirm that normal DTC (DTC 12) is displayed and not malfunction DTC.

NOTE:

If DTC B1051 or DTC B1071 is stored in SDM, it is not possible to clear DTC.

1. “AIR BAG” monitor coupler	(a) Open
2. Body ground	(b) Short
3. Diagnosis switch terminal	(c) About 10 seconds
4. Service wire	(d) 1 sec.

DTC Table

DTC	“AIR BAG” warning lamp flashing pattern		Diagnosis		
	NO.	MODE			
–	12		Normal		–
B1015	15		Passenger air bag circuit	Resistance high	Diagnose trouble according to diagnostic flow table corresponding to each code No.
B1016	16			Resistance low	
B1018	18			Short to ground	
B1019	19			Short to power circuit	
B1021	21		Driver air bag circuit	Resistance high	
B1022	22			Resistance low	
B1024	24			Short to ground	
B1025	25			Short to power circuit	
B1032	32		Power source voltage	Too low	

DTC	"AIR BAG" warning lamp flashing pattern		Diagnosis		
	NO.	MODE			
B1041	41		Driver pretensioner circuit	Resistance high	Diagnose trouble according to diagnostic flow table corresponding to each code No.
B1042	42			Resistance low	
B1043	43			Short to ground	
B1044	44			Short to power circuit	
B1045	45		Passenger pretensioner circuit	Resistance high	
B1046	46			Resistance low	
B1047	47			Short to ground	
B1048	48			Short to power circuit	
B1051	51		SDM	Frontal crash detected	
B1071	71		SDM	Internal fault	
B1013	13			Specifications different between air bag system and SDM	

NOTE:

- **When 2 or more codes are indicated, the lowest numbered code will appear first.**
- **Current DTC and history DTC can be identified by lighting and flashing of "AIR BAG" warning lamp as follows. However, if a multiple number of DTC's are set an even one of them is a current DTC, "AIR BAG" warning lamp remains on after ignition switch is turned ON. Therefore, it is not possible to identify any of them as to whether it is a current one or a history one. (But use of SUZUKI scan tool will make identification possible.)**

	Current DTC is set. (Abnormality exists at present.)	**History DTC is set only. (Faulty condition occurred once in the past but normal condition is restored at present.)**
"AIR BAG" warning lamp after ignition switch ON	**Flashing 6 times and turns on.**	**Flashing 6 times and turns off.**
"AIR BAG" warning lamp when grounding diagnosis switch	**Current DTC is displayed.**	**History DTC is displayed.**

“AIR BAG” Warning Lamp Circuit Trouble Diagnosis Table

WIRING DIAGRAM

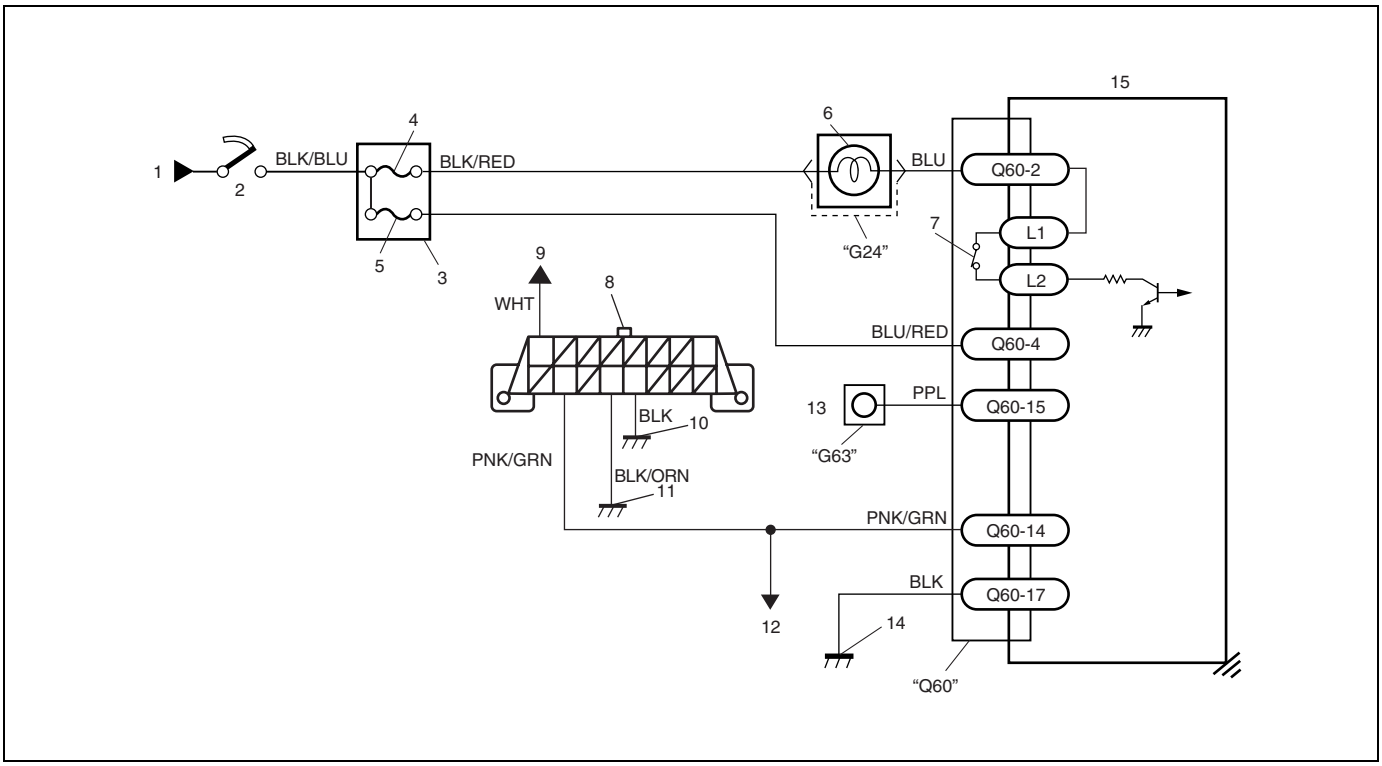

1. From main fuse	6. “AIR BAG” warning lamp in combination meter	11. Ground on engine block
2. Ignition switch	7. Connection detection pin	12. To ECM, TCM and ABS control module (if equipped)
3. Circuit fuse box	8. Data link connector	13. “AIR BAG” monitor coupler
4. “METER” fuse	9. To circuit fuse box	14. Ground for air bag system
5. “AIR BAG” fuse	10. Ground on body	15. SDM

CAUTION:

- **Be sure to perform “Air Bag Diagnostic System Check” in this section before starting diagnosis according to flow table.**
- **When measurement of resistance or voltage is required in this table, use a specified digital multimeter described in “Special Tool” in this section along with a correct terminal adapter from special tool (Connector test adapter kit).**
- **When a check for proper connection is required, refer to “Intermittent and Poor Connections” in this section.**
- **If there is open circuit in the air bag wire harness, connector or terminal is found damaged, replace the wire harness, connector and terminal as an assembly.**

“AIR BAG” warning lamp comes on steady

TABLE TEST DESCRIPTION

STEP 1 : Check “AIR BAG” fuse.
STEP 2 : Check power source circuit.
STEP 3 : Check “AIR BAG” warning lamp circuit.

DIAGNOSTIC FLOW TABLE

Step	Action	Yes	No
1	1) Ignition switch OFF. 2) Remove and inspect “AIR BAG” fuse. Is fuse good?	Go to step 2.	“BLU/RED” wire short to ground. After repair, replace “AIR BAG” fuse.
2	1) Disconnect SDM connector “Q60”. 2) Check proper connection to SDM at terminal “Q60-4”. 3) If OK then check voltage between “Q60-4” terminal of SDM connector and body ground with ignition switch ON. Is it 8 V or more?	Go to step 3.	“BLU/RED” wire (between “AIR BAG” fuse and SDM connector) open “BLK/BLU” wire (between ignition switch and “AIR BAG” fuse) open or short to ground.
3	1) Disconnect 16-pin combination meter connector “G24” from combination meter referring to “Combination Meter” in Section 8. 2) Check resistance between “Q60-2” terminal of SDM connector and body ground. Is resistance 1 MΩ or more?	Substitute a known-good SDM and recheck.	“BLU” wire (between combination meter and SDM connector) short to ground.

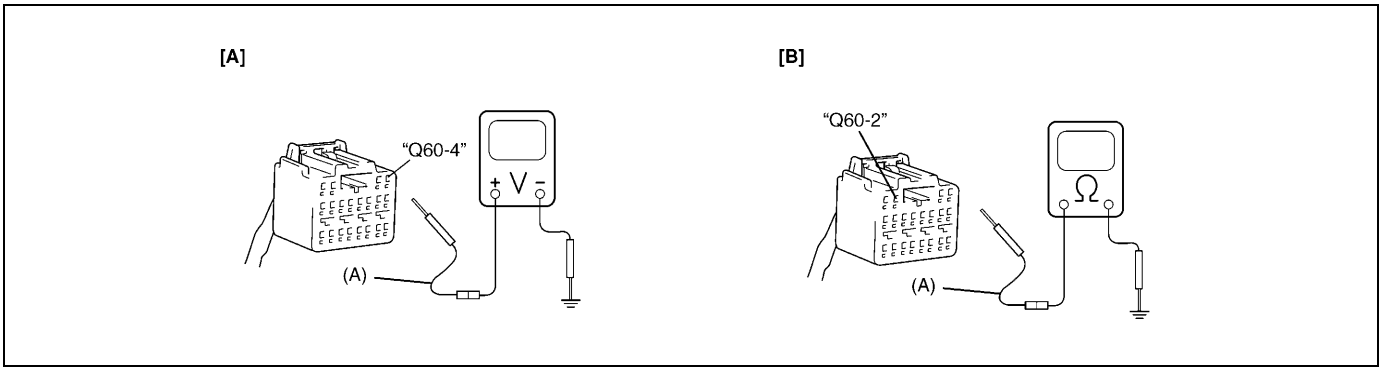

[A] :	Fig. for STEP 2
[B] :	Fig. for STEP 3

Special tool
(A) : 09932-76010

NOTE:

Upon completion of inspection and repair work, perform the following items.

- **Reconnect all air bag system components, ensure all components are properly mounted.**
- **Repeat “Air Bag Diagnostic System Check” in this section to confirm that the trouble has been corrected.**

“AIR BAG” warning lamp does not come on

TABLE TEST DESCRIPTON

STEP 1 : Check combination meter power feed circuit.
STEP 2 : Check electrical connection check mechanism in SDM connector.
STEP 3 : Check “AIR BAG” warning lamp circuit.
STEP 4 : Check “AIR BAG” bulb and combination meter.
STEP 5 : Check open in “AIR BAG” warning lamp circuit.
STEP 6 : Check short from “AIR BAG” warning lamp circuit to power circuit.

DIAGNOSTIC FLOW TABLE

Step	Action	Yes	No
1	1) Set parking brake. 2) Note combination meter when ignition switch is turned ON. Does the “BRAKE” indicator (warning lamp) come ON?	Go to step 2.	“BLK/BLU”, “BLK/RED” wire or “METER” fuse open or short to ground
2	1) Disconnect SDM connector “Q60”. 2) Check electrical connection check mechanism. (Connection detecting pin and “L1” and “L2” terminals for dents, cracks or damages.) Is it in good condition?	Go to step 3.	Repair electrical connection check mechanism.
3	1) Check proper connection to SDM at terminal “Q60-2”. 2) If OK, check voltage from “Q60-2” terminal of SDM connector to body ground with ignition switch ON. Is it 8 V or more?	Substitute a known-good SDM and recheck.	Go to step 4.
4	1) Turn ignition switch OFF. 2) Remove and inspect “AIR BAG” warning lamp bulb and combination meter referring to “Combination Meter” in section 8. Are there in good condition?	Go to step 5.	Replace bulb “AIR BAG” warning lamp bulb or combination meter.
5	1) Check proper connection to combination meter at “BLU” terminal for “AIR BAG” warning lamp and to SDM at terminal “Q60-2”. 2) If OK, check resistance between “BLU” wire terminal of combination meter connector “G24” (16-pin connector) and “Q60-2” terminal of SDM connector. Is resistance 1 Ω or less?	Go to step 6.	Repair high resistance or open in “BLU” wire circuit (between combination meter and SDM).
6	1) Measure voltage from “Q60-2” terminal of SDM connector to body ground with ignition switch ON. Is it 0 V or more?	Repair short from “BLU” wire circuit (between combination meter and SDM) to power circuit.	Substitute a known-good SDM and recheck.

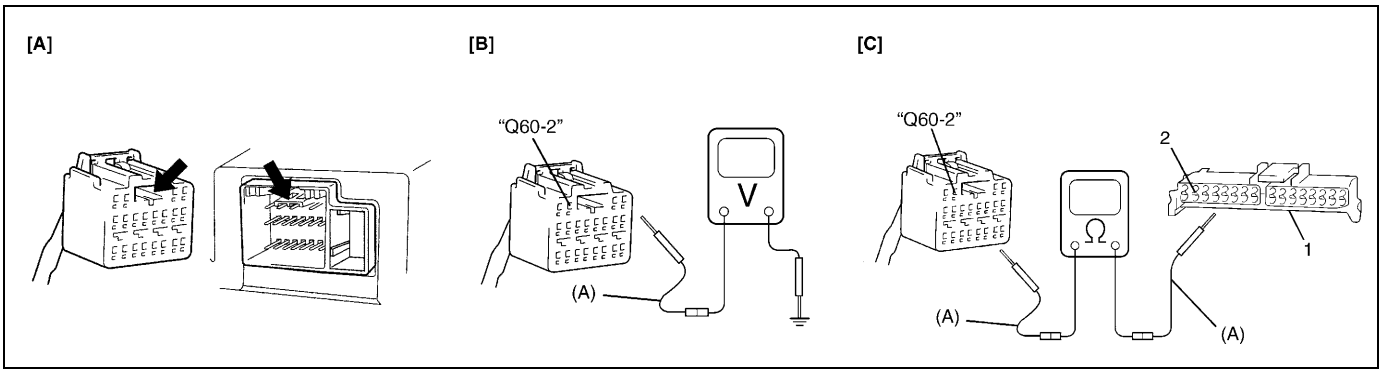

[A] : Fig. for STEP 2	1. 16-pin connector (for combination meter connector "G24")
[B] : Fig. for STEP 3 and 6	2. "BLU" wire terminal
[C] : Fig. for STEP 5	

Special tool
(A) : 09932-76010

NOTE:

Upon completion of inspection and repair work, perform the following items.

- **Reconnect all air bag system components, ensure all components are properly mounted.**
- **Repeat "Air Bag Diagnostic System Check" in this section to confirm that the trouble has been corrected.**

“AIR BAG” warning lamp flashes

TABLE TEST DESCRIPTON

STEP 1 : Check “AIR BAG” monitor coupler.
STEP 2 : Check diagnosis switch circuit for air bag system.

DIAGNOSTIC FLOW TABLE

Step	Action	Yes	No
1	1) Check “AIR BAG” monitor coupler “G63”. Is it connected diagnosis switch terminal and ground terminal in “AIR BAG” monitor coupler by service wire?	Remove service wire.	Go to step 2.
2	1) With ignition switch OFF, disconnect SDM connector “Q60”. 2) Measure resistance between “Q60-15” terminal of SDM connector and body ground. Is resistance 1 MΩ or more?	Substitute a known-good SDM and recheck.	Repair short from “PPL” wire circuit to ground.

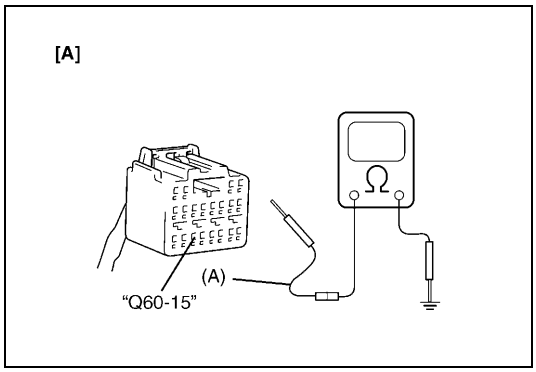

[A] : Fig. for STEP 2

Special tool
(A) : 09932-76010

NOTE:

Upon completion of inspection and repair work, perform the following items.

- **Reconnect all air bag system components, ensure all components are properly mounted.**
- **Repeat “Air Bag Diagnostic System Check” in this section to confirm that the trouble has been corrected.**

“AIR BAG” warning lamp can not indicate flashing

TABLE TEST DESCRIPTON

STEP 1 : Check “AIR BAG” monitor coupler.
STEP 2 : Check diagnosis switch circuit for air bag system.

DIAGNOSTIC FLOW TABLE

Step	Action	Yes	No
1	1) Inspect connection between diagnostic switch terminal on “AIR BAG” monitor coupler “G63” and body ground by service wire. Is it securely connected between them by service wire?	Go to step 2.	Properly connection diagnostic switch terminal on “AIR BAG” monitor coupler and body ground by service wire.
2	1) Disconnect SDM connector “Q60” from SDM. 2) Check for proper connection at “PPL” wire (“Q60-15” terminal of SDM connector and “G63-2” terminal of “AIR BAG” monitor coupler) terminals. 3) If OK then measure resistance between “Q60-15” terminal and “G63-2” terminal. Is resistance 1 Ω or more?	Check “PPL” wire terminals. If OK then “PPL” wire circuit high resistance or open.	Substitute a known good SDM and recheck.

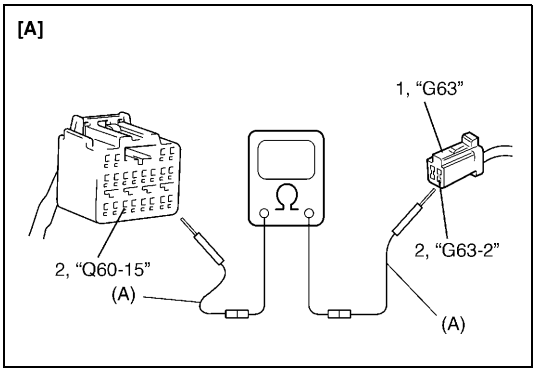

[A] : Fig. for STEP 2
1. “AIR BAG” monitor coupler
2. “PPL” wire terminal

Special tool
(A) : 09932-76010

NOTE:

Upon completion of inspection and repair work, perform the following items.

- **Reconnect all air bag system components, ensure all components are properly mounted.**
- **Repeat “Air Bag Diagnostic System Check” in this section to confirm that the trouble has been corrected.**

SDM Serial Data Circuit Toruble Diagnosis Table

WIRING DIAGRAM

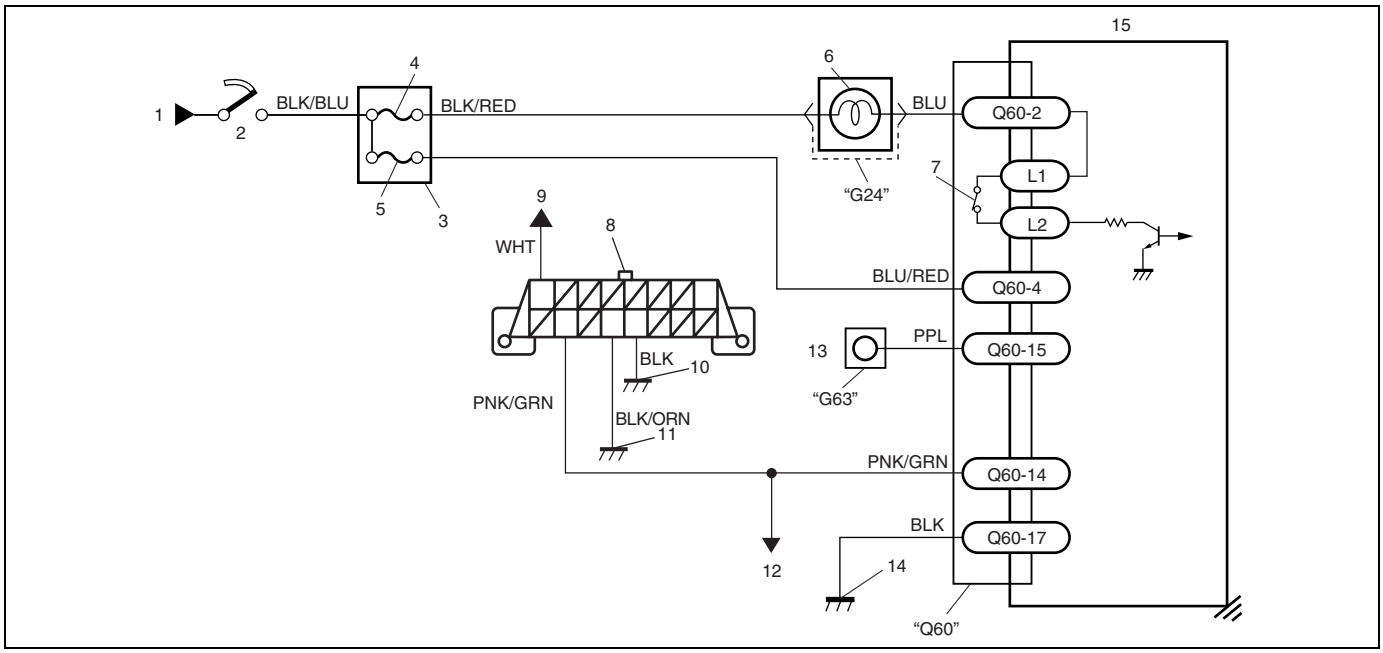

1. From main fuse	6. "AIR BAG" warning lamp in combination meter	11. Ground on engine block
2. Ignition switch	7. Connection detection pin	12. To ECM, TCM and ABS control module (if equipped)
3. Circuit fuse box	8. Data link connector (DLC)	13. "AIR BAG" monitor coupler
4. "METER" fuse	9. To circuit fuse box	14. Ground for air bag system
5. "AIR BAG" fuse	10. Ground on body	15. SDM

CAUTION:

- **Be sure to perform "Air Bag Diagnostic System Check" in this section before starting diagnosis according to flow table.**
- **When measurement of resistance or voltage is required in this table, use a specified digital multimeter described in "Special Tool" in this section along with a correct terminal adapter from special tool (Connector test adapter kit).**
- **When a check for proper connection is required, refer to "Intermittent and Poor Connections" in this section.**
- **If there is open circuit in the air bag wire harness, connector or terminal is found damaged, replace the wire harness, connector and terminal as an assembly.**

TABLE TEST DESCRIPTION

STEP 1 : An improper connection to the data link connector (DLC) will prevent communications from being established.
STEP 2 : This test checks whether it is possible to communicate with other control module.
STEP 3 : This test checks for an open in "PNK/GRN" circuit in air bag harness.

DIAGNOSTIC FLOW TABLE

Step	Action	Yes	No
1	1) Make sure that SUZUKI scan tool is free from malfunction for air bag system is used. 2) Ignition switch OFF. 3) Check proper connection of SUZUKI scan tool to DLC. Is connection in good condition?	Go to step 2.	Properly connect SUZUKI scan tool to DLC.

Step	Action	Yes	No
2	1) Check if communication is possible by trying communication with other control module (ECM, TCM (if equipped) or ABS control module (if equipped)). Is it possible to communicate with other control module?	Go to step 3.	Repair open in common section of serial data circuit (“PNK/GRN” wire circuit) used by all controllers or short to ground or power circuit which has occurred some-where in serial data circuit (“PNK/GRN” wire circuit).
3	1) With ignition switch OFF, disconnect SDM connector “Q60”. 2) Check proper connection at “Q60-14” (“PNK/GRN” wire) terminal of SDM connector. 3) If OK, then check resistance between “PNK/GRN” wire terminal of DLC and “Q60-14” (“PNK/GRN” wire) terminal of SDM connector. Is resistance 1 Ω or less?	Substitute a known-good SDM and recheck.	Repair high resistance or open in “PNK/GRN” wire circuit.

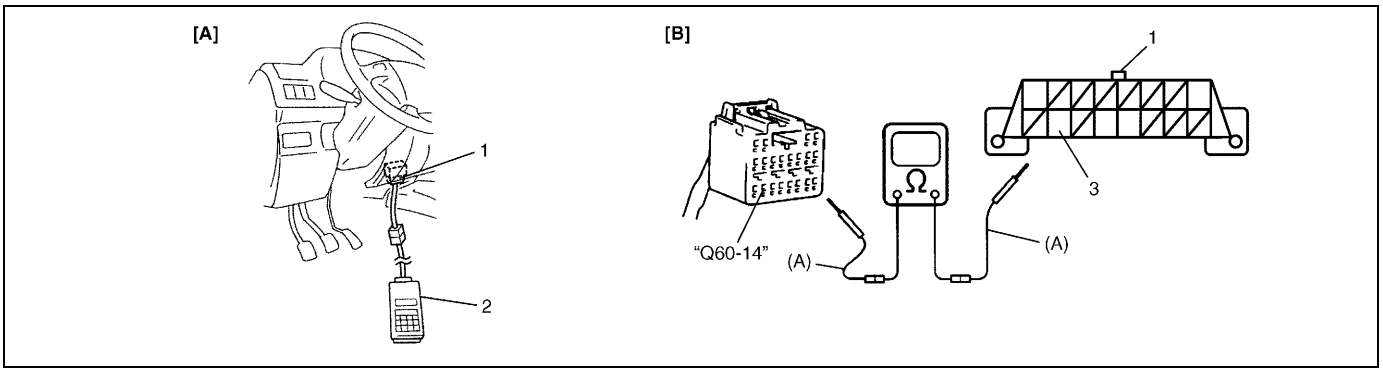

[A] : Fig. for STEP 1	1. DLC	3. “PNK/GRN” wire terminal
[B] : Fig. for STEP 3	2. SUZUKI scan tool	

Special tool
(A) : 09932-76010

NOTE:

Upon completion of inspection and repair work, perform following items.

- **Reconnect all air bag system components, ensure all components are properly mounted.**
- **Repeat “Air Bag Diagnostic System Check” in this section to confirm that the trouble has been corrected.**

DTC B1015 – Passenger Air Bag Initiator Circuit Resistance High
DTC B1016 – Passenger Air Bag Initiator Circuit Resistance Low
DTC B1018 – Passenger Air Bag Initiator Circuit Short to Ground
DTC B1019 – Passenger Air Bag Initiator Circuit Short to Power Circuit

WIRING DIAGRAM

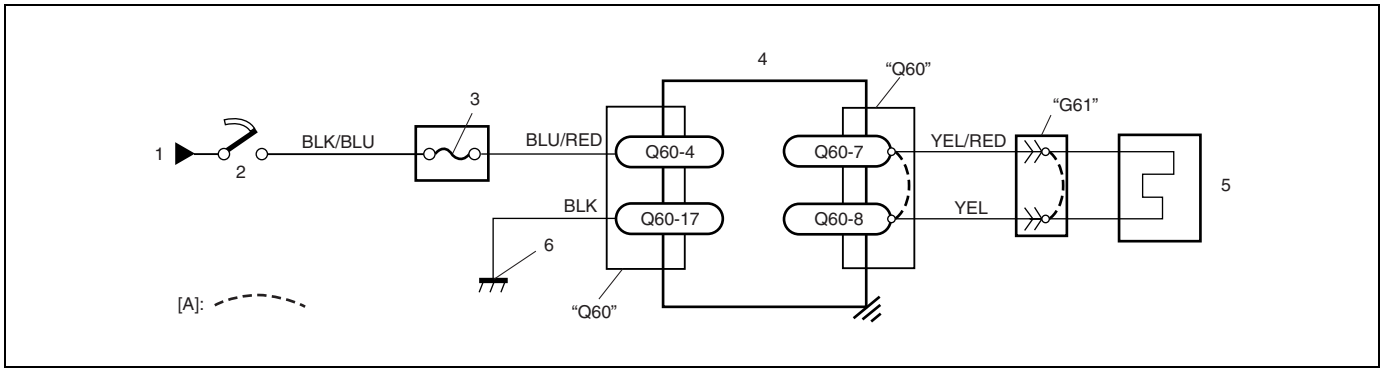

1. From main fuse	3. "AIR BAG" fuse	5. Passenger air bag (inflator) module	[A] : Shorting bar
2. Ignition switch	4. SDM	6. Ground for air bag system	

CAUTION:

- **Be sure to perform "Air Bag Diagnostic System Check" in this section before starting diagnosis according to flow table.**
- **When measurement of resistance or voltage is required in this table, use a specified digital multimeter described in "Special Tool" in this section along with a correct terminal adapter from special tool (Connector test adapter kit).**
- **When a check for proper connection is required, refer to "Intermittent and Poor Connections" in this section.**
- **If there is open circuit in the air bag wire harness, connector or terminal is found damaged, replace the wire harness, connector and terminal as an assembly.**

DTC WILL SET WHEN

DTC B1015 :

The combined resistance of the passenger air bag (inflator) module, harness wiring and connector terminal contact is above a specified value for specified time.

DTC B1016 :

The combined resistance of the passenger air bag (inflator) module, harness wiring and connector terminal contact is below a specified value for specified time.

DTC B1018 :

The voltage measured at passenger air bag initiator circuit is below a specified value for specified time.

DTC B1019 :

The voltage measured at passenger air bag initiator circuit is above a specified value for specified time.

TABLE TEST DESCRIPTION

DTC B1015, B1016, B1018 and B1019 :

STEP 1 : Check whether malfunction is in passenger air bag (inflator) module.
STEP 2 : Check passenger air bag (inflator) module initiator circuit in air bag harness.
STEP 3 : Check passenger air bag (inflator) module initiator circuit in air bag harness for DTC B1018 and B1019 only.

DIAGNOSTIC FLOW TABLE

DTC B1015 : PASSENGER AIR BAG INITIATOR CIRCUIT RESISTANCE HIGH

Step	Action	Yes	No
1	1) With ignition switch OFF, disconnect passenger air bag (inflator) module connector “G61” behind the glove box. 2) Check proper connection to passenger air bag (inflator) module at terminals in “G61” connector. 3) If OK then connect special tools (B) and (C) to passenger air bag (inflator) module connector “G61”. With ignition switch ON, does DTC B1015 still exist?	Go to step 2.	Ignition switch OFF. Replace passenger air bag (inflator) module referring to “Passenger Air Bag (Inflator) Module” in this section.
2	1) With ignition switch OFF, disconnect SDM connector “Q60”. 2) Check proper connection to SDM at terminals “Q60-7” and “Q60-8”. 3) If OK, release shorting bar in SDM connector inserting release tool (1) included in special tool (A). 4) Measure resistance between “Q60-7” and “Q60-8” terminals with special tools (B) and (C) connected to “G61” connector. Is resistance 4.5 Ω or less?	Substitute a known-good SDM and recheck.	Repair high resistance or open in “YEL/RED” or “YEL” wire circuit.

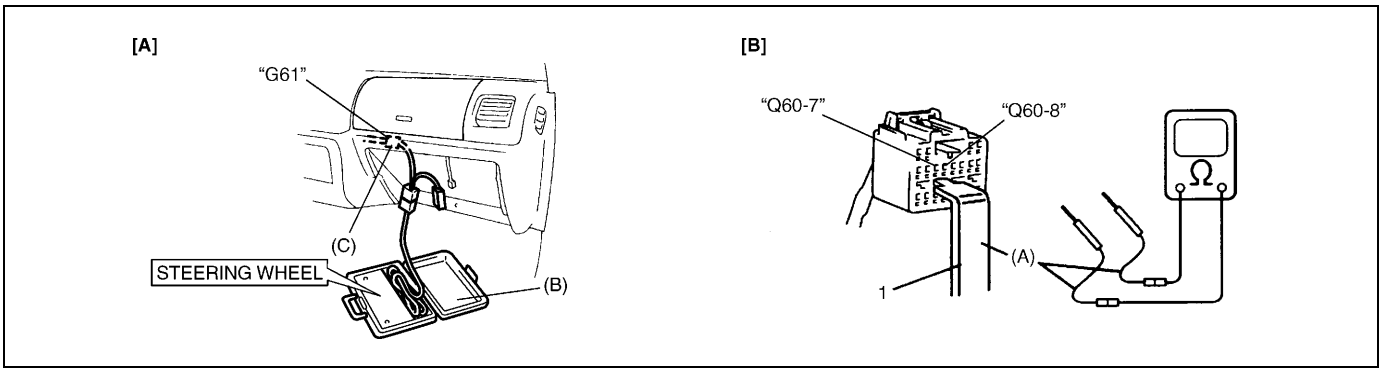

[A] :	Fig. for STEP 1 and 2
[B] :	Fig. for STEP 2

Special tool
(A) : 09932-76010
(B) : 09932-75010
(C) : 09932-78340

NOTE:

Upon completion of inspection and repair work, perform the following items.

- **Reconnect all air bag system components, ensure all components are properly mounted.**
- **Clear diagnostic trouble codes referring to “DTC Clearance” in this section, if any.**
- **Repeat “Air Bag Diagnostic System Check” in this section to confirm that the trouble has been corrected.**

DTC B1016 : PASSENGER AIR BAG INITIATOR CIRCUIT RESISTANCE LOW

Step	Action	Yes	No
1	1) With ignition switch OFF, disconnect passenger air bag (inflator) module connector “G61” behind the glove box. 2) Check proper connection to passenger air bag (inflator) module at terminals in “G61” connector. 3) If OK then connect special tools (B) and (C) to passenger air bag (inflator) module connector “G61”. With ignition switch ON, does DTC B1016 still exist?	Go to step 2.	Ignition switch OFF. Replace passenger air bag (inflator) module referring to “Passenger Air Bag (Inflator) Module” in this section.
2	1) With ignition switch OFF, disconnect SDM connector “Q60”. 2) Check proper connection to SDM at terminals “Q60-7” and “Q60-8”. 3) If OK, release shorting bar in SDM connector inserting release tool (1) included in special tool (A). 4) Measure resistance between “Q60-7” and “Q60-8” terminals with special tools (B) and (C) connected to “G61” connector. Is resistance 1.4 Ω or more?	Substitute a known-good SDM and recheck.	Repair short from “YEL/RED” wire circuit to “YEL” wire circuit or from “YEL/RED” or “YEL” wire circuit to other wire circuit.

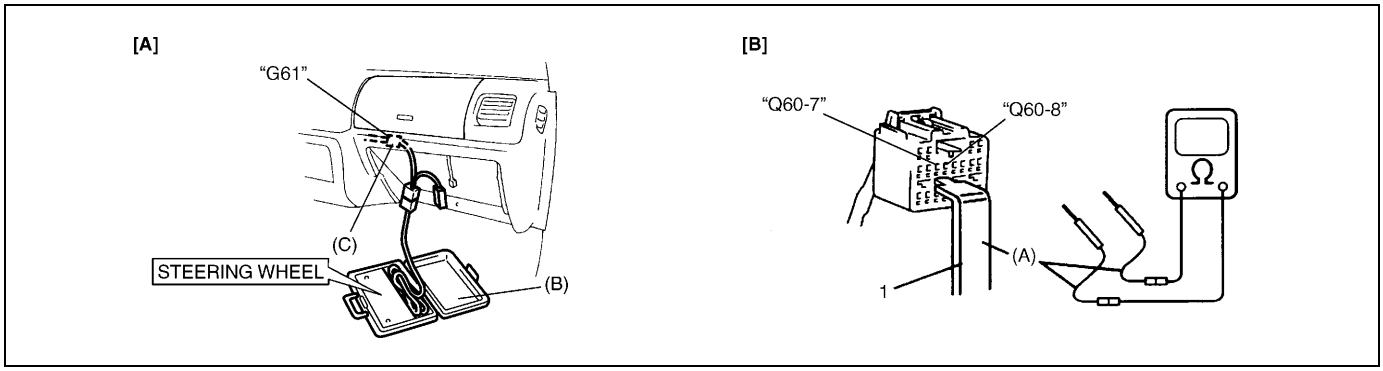

[A] :	Fig. for STEP 1 and 2
[B] :	Fig. for STEP 2

Special tool
(A) : 09932-76010
(B) : 09932-75010
(C) : 09932-78340

NOTE:

Upon completion of inspection and repair work, perform the following items.

- **Reconnect all air bag system components, ensure all components are properly mounted.**
- **Clear diagnostic trouble codes referring to “DTC Clearance” in this section, if any.**
- **Repeat “Air Bag Diagnostic System Check” in this section to confirm that the trouble has been corrected.**

DTC B1018 : PASSENGER AIR BAG INITIATOR CIRCUIT SHORT TO GROUND

Step	Action	Yes	No
1	1) With ignition switch OFF, disconnect passenger air bag (inflator) module connector “G61” behind the glove box. 2) Check proper connection to passenger air bag (inflator) module at terminals in “G61” connector. 3) If OK then connect special tools (B) and (C) to passenger air bag (inflator) module connector “G61”. With ignition switch ON, does DTC B1018 still exist?	Go to step 2.	Ignition switch OFF. Replace passenger air bag (inflator) module referring to “Passenger Air Bag (Inflator) Module” in this section.
2	1) With ignition switch OFF, disconnect special tools (B) and (C) from “G61” connector and SDM connector “Q60” from SDM respectively. 2) Release shorting bar in SDM connector inserting release tool (1) included in special tool (A). 3) Measure resistance between “Q60-7” terminals and body ground. Is resistance 1 MΩ or more?	Go to step 3.	Repair short from “YEL/RED” wire circuit to ground.
3	1) Measure resistance between “Q60-8” terminal and body ground. Is resistance 1 MΩ or more?	Substitute a known-good SDM and recheck.	Repair short from “YEL” wire circuit to ground.

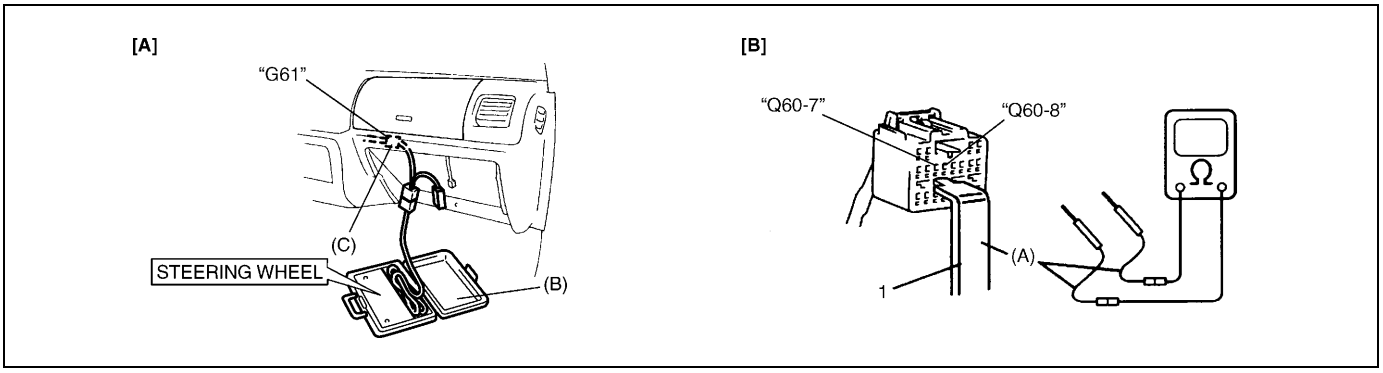

[A] :	Fig. for STEP 1, 2 and 3
[B] :	Fig. for STEP 2 and 3

Special tool
(A) : 09932-76010
(B) : 09932-75010
(C) : 09932-78340

NOTE:

Upon completion of inspection and repair work, perform the following items.

- **Reconnect all air bag system components, ensure all components are properly mounted.**
- **Clear diagnostic trouble codes referring to “DTC Clearance” in this section, if any.**
- **Repeat “Air Bag Diagnostic System Check” in this section to confirm that the trouble has been corrected.**

DTC B1019 : PASSENGER AIR BAG INITIATOR CIRCUIT SHORT TO POWER CIRCUIT

Step	Action	Yes	No
1	1) With ignition switch OFF, disconnect passenger air bag (inflator) module connector “G61” behind the glove box. 2) Check proper connection to passenger air bag (inflator) module at terminals in “G61” connector. 3) If OK then connect special tools (B) and (C) to passenger air bag (inflator) module connector “G61”. With ignition switch ON, does DTC B1019 still exist?	Go to step 2.	Ignition switch OFF. Replace passenger air bag (inflator) module referring to “Passenger Air Bag (Inflator) Module” in this section.
2	1) With ignition switch OFF, disconnect special tools (B) and (C) from “G61” connector and SDM connector “Q60” from SDM respectively. 2) Release shorting bar in SDM connector inserting release tool (1) included in special tool (A). 3) Measure voltage from “Q60-7” terminal to body ground. With ignition switch ON, is voltage 1 V or less?	Go to step 3.	Repair short from “YEL/RED” wire circuit to power circuit.
3	1) Measure voltage from “Q60-8” terminal to body ground. With ignition switch ON, is voltage 1 V or less?	Substitute a known-good SDM and recheck.	Repair short from “YEL” wire circuit to power circuit.

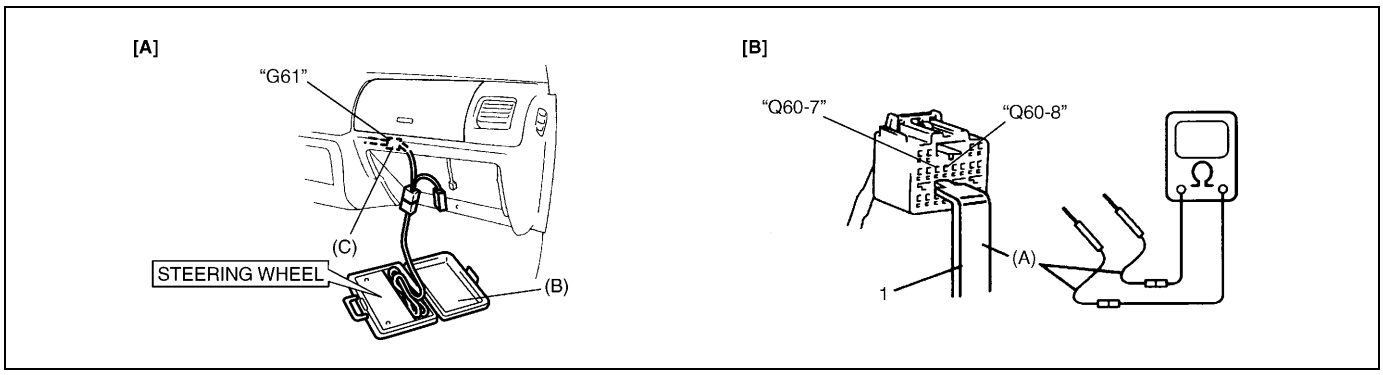

[A] :	Fig. for STEP 1, 2 and 3
[B] :	Fig. for STEP 2 and 3

Special tool
(A) : 09932-76010
(B) : 09932-75010
(C) : 09932-78340

NOTE:

Upon completion of inspection and repair work, perform the following items.

- **Reconnect all air bag system components, ensure all components are properly mounted.**
- **Clear diagnostic trouble codes referring to “DTC Clearance” in this section, if any.**
- **Repeat “Air Bag Diagnostic System Check” in this section to confirm that the trouble has been corrected.**

DTC B1021 – Driver Air Bag Initiator Circuit Resistance High
DTC B1022 – Driver Air Bag Initiator Circuit Resistance Low
DTC B1024 – Driver Air Bag Initiator Circuit Short to Ground
DTC B1025 – Driver Air Bag Initiator Circuit Short to Power Circuit

WIRING DIAGRAM

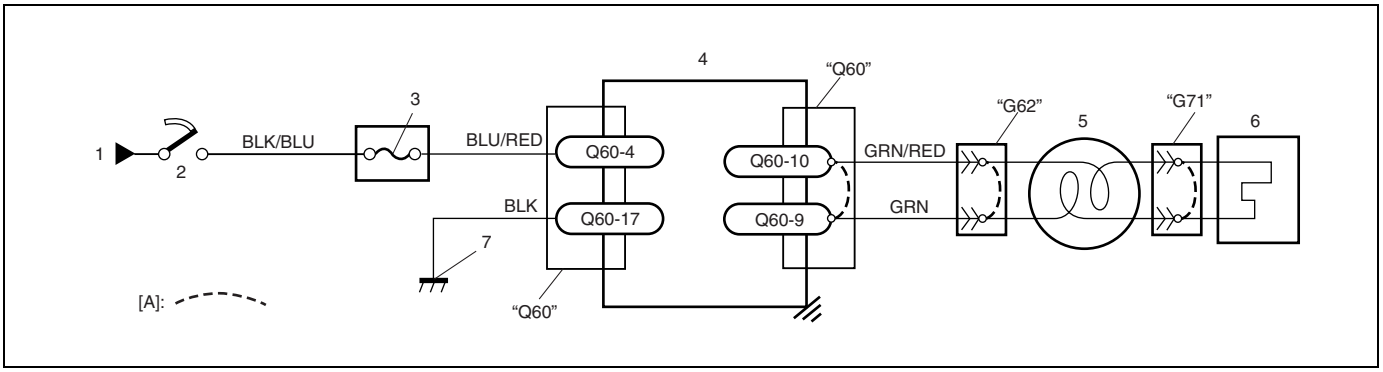

1. From main fuse	4. SDM	7. Ground for air bag system
2. Ignition switch	5. Contact coil assembly	[A] : Shorting bar
3. "AIR BAG" fuse	6. Driver air bag (inflator) module	

CAUTION:

- **Be sure to perform "Air Bag Diagnostic System Check" in this section before starting diagnosis according to flow table.**
- **When measurement of resistance or voltage is required in this table, use a specified digital multimeter described in "Special Tool" in this section along with a correct terminal adapter from special tool (Connector test adapter kit).**
- **When a check for proper connection is required, refer to "Intermittent and Poor Connections" in this section.**
- **If there is open circuit in the air bag wire harness, connector or terminal is found damaged, replace the wire harness, connector and terminal as an assembly.**

DTC WILL SET WHEN

DTC B1021 :

The combined resistance of the driver air bag (inflator) module, contact coil assembly, harness wiring and connector terminal contact is above a specified value for specified time.

DTC B1022 :

The combined resistance of the driver air bag (inflator) module, contact coil assembly, harness wiring and connector terminal contact is below a specified value for specified time.

DTC B1024 :

The voltage measured at driver air bag initiator circuit is below a specified value for specified time.

DTC B1025 :

The voltage measured at driver air bag initiator circuit is above a specified value for specified time.

TABLE TEST DESCRIPTION

DTC B1021, B1022, B1024 and B1025 :

STEP 1 : Check whether malfunction is in contact coil and driver air bag (inflator) module or the others.
STEP 2 : Check driver air bag (inflator) module initiator circuit.
STEP 3 : Check whether malfunction is in contact coil or driver air bag (inflator) module.

DIAGNOSTIC FLOW TABLE

DTC B1021 : DRIVER AIR BAG INITIATOR CIRCUIT RESISTANCE HIGH

Step	Action	Yes	No
1	1) With ignition switch OFF, disconnect contact coil connector “G62” located near the base of the steering column. 2) Check proper connection to contact coil at terminals in connect coil connector “G62”. 3) If OK then connect special tools (B) and (C) to contact coil connector “G62”. With ignition switch ON, does DTC B1021 still exist?	Go to step 2.	Go to step 3.
2	1) With ignition switch OFF, disconnect SDM connector “Q60”. 2) Check proper connection to SDM at terminals “Q60-9” and “Q60-10”. 3) If OK, release shorting bar in SDM connector inserting release tool (1) included in special tool (A). 4) Measure resistance between “Q60-9” and “Q60-10” terminals with connected special tools (B) and (C) to “G62” connector. Is resistance 4.5 Ω or less?	Substitute a known-good SDM and recheck.	Repair high resistance or open in “GRN” or “GRN/RED” wire circuit.
3	1) With ignition switch OFF, disconnect special tools (B) and (C) from “G62” connector then reconnect contact coil connector “G62” located near the base of the steering column as it was. 2) Remove driver air bag (inflator) module from steering wheel referring to “Driver Air Bag (Inflator) Module” in Section 3C. 3) Check proper connection to driver air bag (inflator) module at terminals in “G70” connector. 4) If OK then connect special tools (B) and (C) to “G70” connector. With ignition switch ON, does DTC B1021 still exist?	Ignition switch OFF. Replace contact coil assembly referring to “Combination Switch/Contact Coil and Combination Switch Assembly” in Section 3C.	Ignition switch OFF. Replace driver air bag (inflator) module referring to “Steering Wheel and Driver Air Bag (Inflator) Module” in Section 3C.

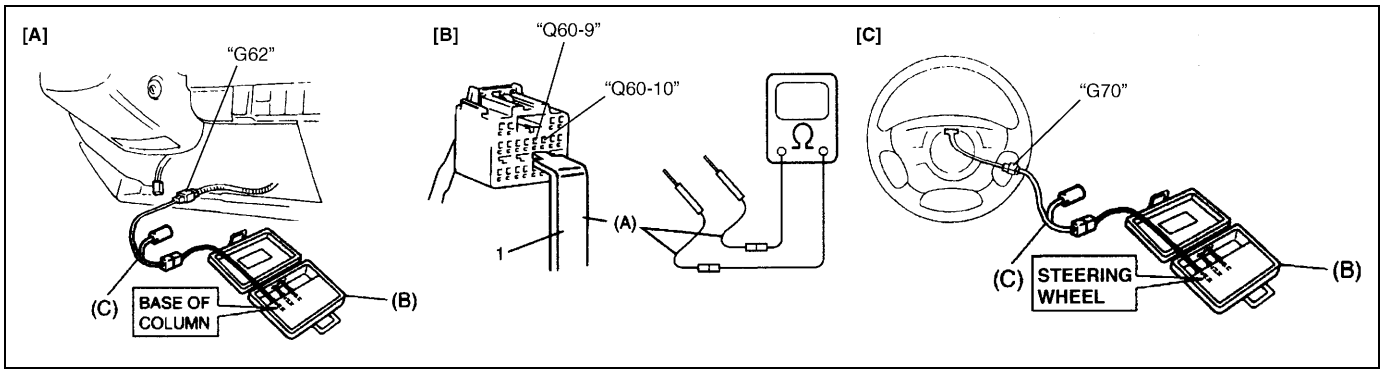

[A] :	Fig. for STEP 1 and 2
[B] :	Fig. for STEP 2
[C] :	Fig. for STEP 3

Special tool

(A) : 09932-76010

(B) : 09932-75010

(C) : 09932-78340

NOTE:

Upon completion of inspection and repair work, perform the following items.

- **Reconnect all air bag system components, ensure all components are properly mounted.**
- **Clear diagnostic trouble codes referring to "DTC Clearance" in this section, if any.**
- **Repeat "Air Bag Diagnostic System Check" in this section to confirm that the trouble has been corrected.**

DTC B1022 : DRIVER AIR BAG INITIATOR CIRCUIT RESISTANCE LOW

Step	Action	Yes	No
1	1) With ignition switch OFF, disconnect contact coil connector "G62" located near the base of the steering column. 2) Check proper connection to contact coil at terminals in "G62" connector. 3) If OK then connect special tools (B) and (C) to contact coil connector "G62". With ignition switch ON, does DTC B1022 still exist?	Go to step 2.	Go to step 3.
2	1) With ignition switch OFF, disconnect SDM connector "Q60". 2) Check proper connection to SDM at terminals "Q60-9" and "Q60-10". 3) If OK, release shorting bar in SDM connector inserting release tool (1) included in special tool (A). 4) Measure resistance between "Q60-9" and "Q60-10" terminals with connected special tools (B) and (C) to "G62" connector. Is resistance 1.7 Ω or more?	Substitute a known-good SDM and recheck.	Repair short from "GRN" wire circuit to "GRN/RED" wire circuit or from "GRN" or "GRN/RED" wire circuit to other wire circuit.
3	1) With ignition switch OFF, disconnect special tools (B) and (C) from "G62" connector then reconnect contact coil connector "G62" located near the base of the steering column as it was. 2) Remove driver air bag (inflator) module from steering wheel referring to "Driver Air Bag (Inflator) Module" in Section 3C. 3) Check proper connection to driver air bag (inflator) module at terminals in "G70" connector. 4) If OK then connect special tools (B) and (C) to "G70" connector. With ignition switch ON, does DTC B1022 still exist?	Ignition switch OFF. Replace contact coil assembly referring to "Combination Switch/ Contact Coil and Combination Switch Assembly" in Section 3C.	Ignition switch OFF. Replace driver air bag (inflator) module referring to "Driver Air Bag (Inflator) Module" in Section 3C.

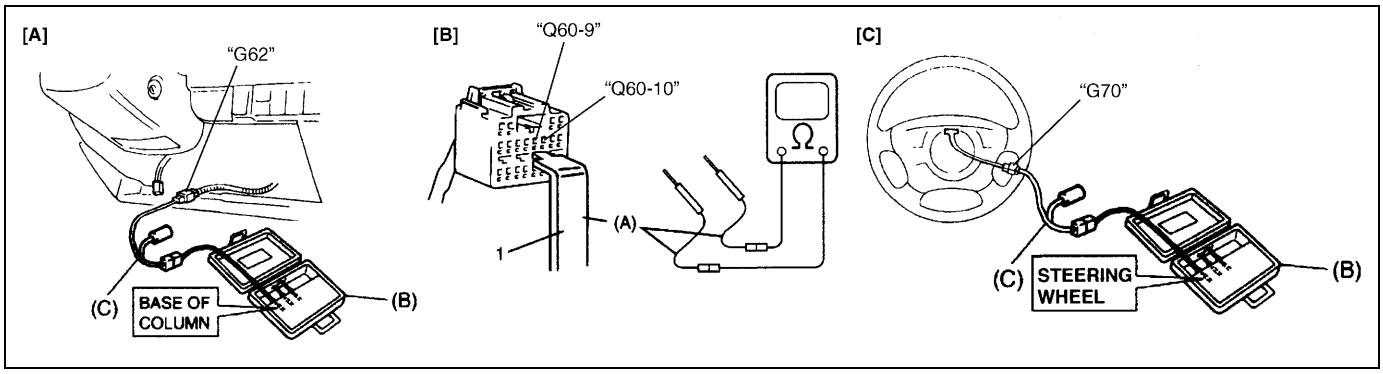

[A] :	Fig. for STEP 1 and 2
[B] :	Fig. for STEP 2
[C] :	Fig. for STEP 3

Special tool
(A) : 09932-76010
(B) : 09932-75010
(C) : 09932-78340

NOTE:

Upon completion of inspection and repair work, perform the following items.

- **Reconnect all air bag system components, ensure all components are properly mounted.**
- **Clear diagnostic trouble codes referring to "DTC Clearance" in this section, if any.**
- **Repeat "Air Bag Diagnostic System Check" in this section to confirm that the trouble has been corrected.**

DTC B1024 : DRIVER AIR BAG INITIATOR CIRCUIT SHORT TO GROUND

Step	Action	Yes	No
1	1) With ignition switch OFF, disconnect contact coil connector “G62” located near the base of the steering column. 2) Check proper connection to contact coil at terminals in “G62” connector. 3) If OK then connect special tools (B) and (C) to contact coil connector “G62”. With ignition switch ON, does DTC B1024 still exist?	Go to step 2.	Go to step 3.
2	1) With ignition switch OFF, disconnect special tools (B) and (C) from “G62” connector and SDM connector “G62” from SDM respectively. 2) Release shorting bar in SDM connector inserting release tool (1) included in special tool (A). 3) Measure resistance between “Q60-9” terminal and body ground and between “Q60-10” terminal and body ground. Are they 1 MΩ or more?	Substitute a known-good SDM and recheck.	Repair short from “GRN” or “GRN/RED” wire circuit to ground.
3	1) With ignition switch OFF, disconnect special tools (B) and (C) from “G62” connector then reconnect contact coil connector “G62” located near the base of the steering column as it was. 2) Remove driver air bag (inflator) module from steering wheel referring to “Driver Air Bag (Inflator) Module” in Section 3C. 3) Check proper connection to driver air bag (inflator) module at terminals in “G70” connector. 4) If OK then connect special tools (B) and (C) to “G70” connector. With ignition switch ON, does DTC B1024 still exist?	Ignition switch OFF. Replace contact coil assembly referring to “Combination Switch/ Contact Coil and Combination Switch Assembly” in Section 3C.	Ignition switch OFF. Replace driver air bag (inflator) module referring to “Driver Air Bag (Inflator) Module” in Section 3C.

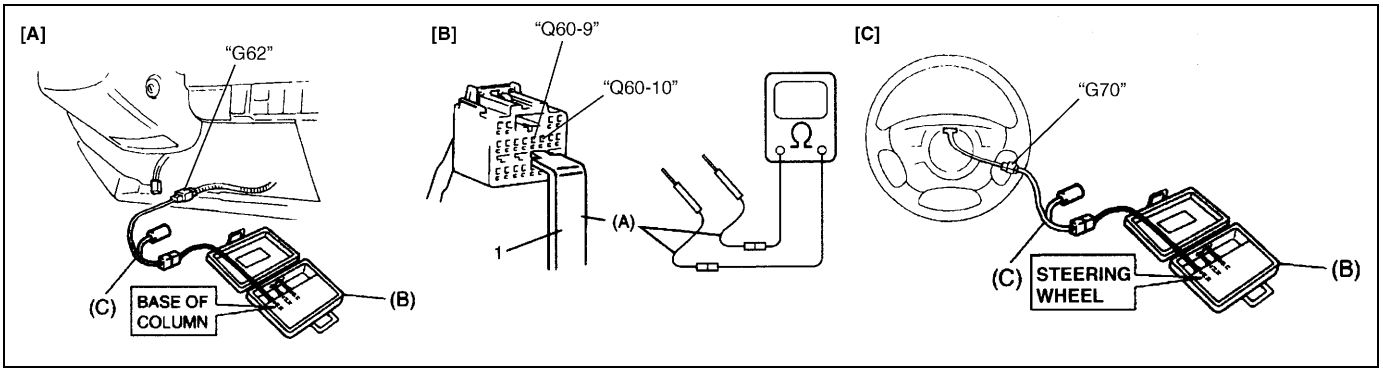

[A] :	Fig. for STEP 1 and 2
[B] :	Fig. for STEP 2
[C] :	Fig. for STEP 3

Special tool
(A) : 09932-76010
(B) : 09932-75010
(C) : 09932-78340

NOTE:

Upon completion of inspection and repair work, perform the following items.

- **Reconnect all air bag system components, ensure all components are properly mounted.**
- **Clear diagnostic trouble codes referring to "DTC Clearance" in this section, if any.**
- **Repeat "Air Bag Diagnostic System Check" in this section to confirm that the trouble has been corrected.**

DTC B1025 : DRIVER AIR BAG INITIATOR CIRCUIT SHORT TO POWER CIRCUIT

Step	Action	Yes	No
1	1) With ignition switch OFF, disconnect contact coil connector "G62" located near the base of the steering column. 2) Check proper connection to contact coil at terminals in contact coil connector "G62". 3) If OK then connect special tools (B) and (C) to contact coil connector "G62". With ignition switch ON, does DTC B1025 still exist?	Go to step 2.	Go to step 3.
2	1) With ignition switch OFF, disconnect special tools (B) and (C) from "G62" connector and SDM connector "Q60" from SDM respectively. 2) Release shorting bar in SDM connector inserting release tool (1) included in special tool (A). 3) Measure voltage from "Q60-9" terminal to body ground and from "Q60-10" terminal to body ground. With ignition switch ON, are they 1 V or less?	Substitute a known-good SDM and recheck.	Repair short from "GRN" or "GRN/RED" wire circuit to power circuit.
3	1) With ignition switch OFF, disconnect special tools (B) and (C) from "G62" connector then reconnect contact coil connector "G62" located near the base of the steering column as it was. 2) Remove driver air bag (inflator) module from steering wheel referring to "Driver Air Bag (Inflator) Module" in Section 3C. 3) Check proper connection to driver air bag (inflator) module at terminals in "G70" connector. 4) If OK then connect special tools (B) and (C) to "G70" connector. With ignition switch ON, does DTC B1025 still exist?	Ignition switch OFF. Replace contact coil assembly referring to "Combination Switch/ Contact Coil and Combination Switch Assembly" in Section 3C.	Ignition switch OFF. Replace driver air bag (inflator) module referring to "Driver Air Bag (Inflator) Module" in Section 3C.

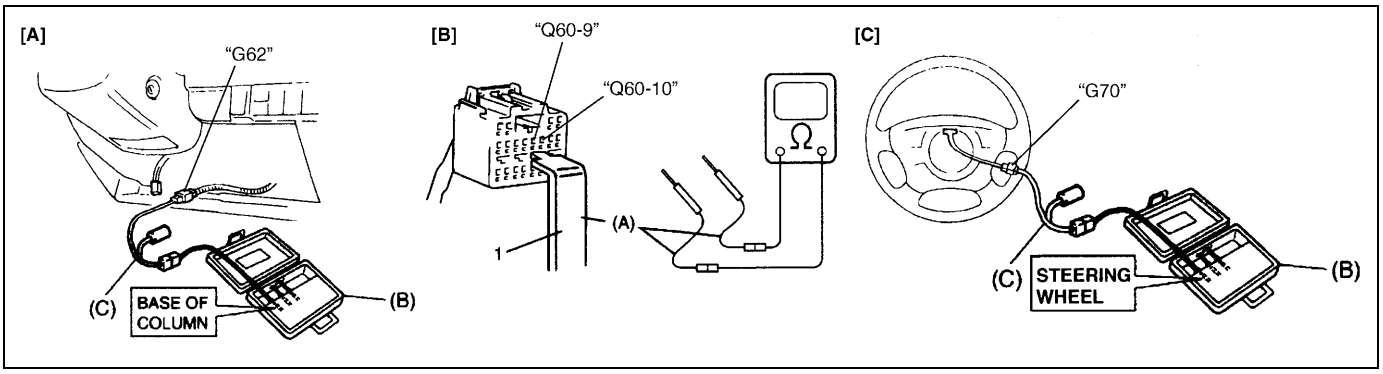

[A] :	Fig. for STEP 1 and 2
[B] :	Fig. for STEP 2
[C] :	Fig. for STEP 3

Special tool
(A) : 09932-76010
(B) : 09932-75010
(C) : 09932-78340

NOTE:

Upon completion of inspection and repair work, perform the following items.

- **Reconnect all air bag system components, ensure all components are properly mounted.**
- **Clear diagnostic trouble codes referring to "DTC Clearance" in this section, if any.**
- **Repeat "Air Bag Diagnostic System Check" in this section to confirm that the trouble has been corrected.**

DTC B1032 – Power Source Voltage Low

WIRING DIAGRAM

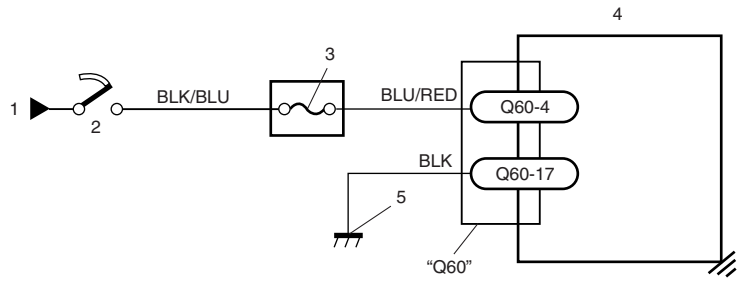

1. From main fuse	3. "AIR BAG" fuse	5. Ground for air bag system
2. Ignition switch	4. SDM	

CAUTION:

- **Be sure to perform "Air Bag Diagnostic System Check" in this section before starting diagnosis according to flow table.**
- **When measurement of resistance or voltage is required in this table, use a specified digital multimeter described in "Special Tool" in this section along with a correct terminal adapter from special tool (Connector test adapter kit).**
- **When a check for proper connection is required, refer to "Intermittent and Poor Connections" in this section.**
- **If there is open circuit in the air bag wire harness, connector or terminal is found damaged, replace the wire harness, connector and terminal as an assembly.**

DTC WILL SET WHEN :

The power source voltage is below specified value for specified time.

TABLE TEST DESCRIPTION :

STEP 1 : Check if voltage on battery is within normal range.
STEP 2 : Check "AIR BAG" fuse.
STEP 3 : Check if battery applied to SDM is within normal range.
STEP 4 : Check if DTC B1032 still exists.

DIAGNOSTIC FLOW TABLE

DTC B1032 : POWER SOURCE VOLTAGE LOW

Step	Action	Yes	No
1	1) Measure voltage on battery. Is voltage 11 V or more?	Go to step 2.	Check Charging System and repair as necessary referring to "Diagnosis" in Section 6H.
2	1) Ignition switch OFF. 2) Remove and inspect "AIR BAG" fuse. Is fuse good?	Go to step 3.	"BLU/RED" wire short to ground. After repair, replace "AIR BAG" fuse.

Step	Action	Yes	No
3	1) With ignition switch OFF, disconnect SDM connector “Q60”. 2) Check proper connection to SDM at “Q60-4” terminal. 3) If OK then ignition switch ON, and then check voltage from “Q60-4” terminal on SDM connector to body ground. Is voltage 8 V or more?	Go to step 4.	Possibly faulty points are as follows. Check each of them and repair as necessary. • Circuit from battery to “Q60” connector. • Charging System (Refer to “Diagnosis” in Section 6H.)
4	1) With ignition switch OFF, reconnect SDM connector. With ignition switch ON, does DTC B1032 still exist?	Substitute a known-good SDM and recheck.	Check Charging System and repair as necessary referring to “Diagnosis” in Section 6H.

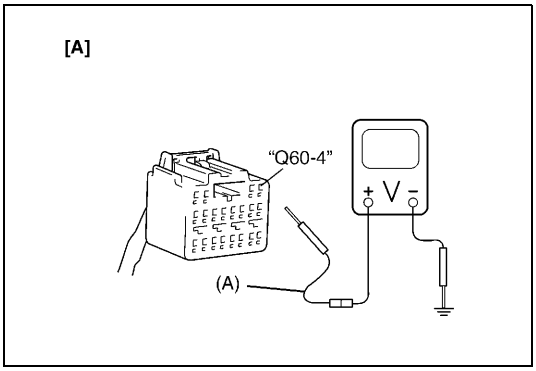

[A] : Fig. for STEP 3

Special tool
(A) : 09932-76010

NOTE:

Upon completion of inspection and repair work, perform the following items.

- **Reconnect all air bag system components, ensure all components are properly mounted.**
- **Clear diagnostic trouble codes referring to “DTC Clearance” in this section, if any.**
- **Repeat “Air Bag Diagnostic System Check” in this section to confirm that the trouble has been corrected.**

DTC B1041 – Driver Pretensioner Initiator Circuit Resistance High
DTC B1042 – Driver Pretensioner Initiator Circuit Resistance Low
DTC B1043 – Driver Pretensioner Initiator Circuit Short to Ground
DTC B1044 – Driver Pretensioner Initiator Circuit Short to Power Circuit
DTC B1045 – Passenger Pretensioner Initiator Circuit Resistance High
DTC B1046 – Passenger Pretensioner Initiator Circuit Resistance Low
DTC B1047 – Passenger Pretensioner Initiator Circuit Short to Ground
DTC B1048 – Passenger Pretensioner Initiator Circuit Short to Power Circuit

WIRING DIAGRAM

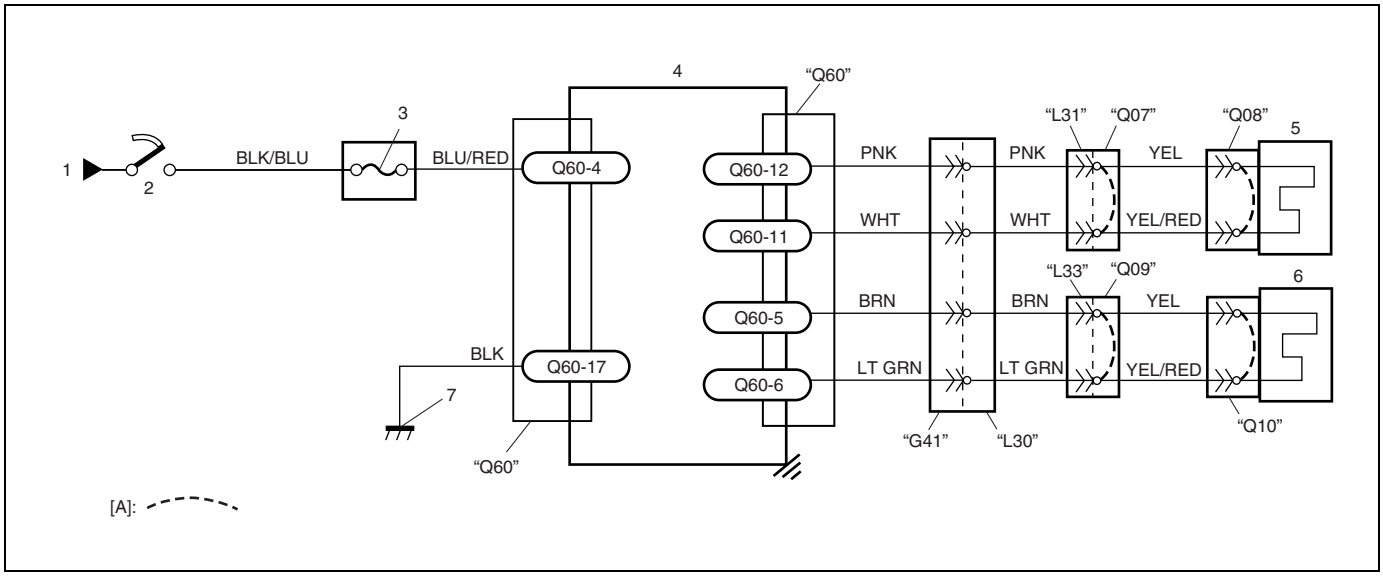

1. From main fuse	4. SDM	7. Ground for air bag system
2. Ignition switch	5. Driver seat belt pretensioner	[A] : Shorting bar
3. "AIR BAG" fuse	6. Passenger seat belt pretensioner	

CAUTION:

- **Be sure to perform "Air Bag Diagnostic System Check" in this section before starting diagnosis according to flow table.**
- **When measurement of resistance or voltage is required in this table, use a specified digital multimeter described in "Special Tool" in this section along with a correct terminal adapter from special tool (Connector test adapter kit).**
- **When a check for proper connection is required, refer to "Intermittent and Poor Connections" in this section.**
- **If there is open circuit in the air bag wire harness, connector or terminal is found damaged, replace the wire harness, connector and terminal as an assembly.**

DTC WILL SET WHEN

DTC B1041 and B1045 :

The resistance of driver or passenger seat belt pretensioner initiator circuit is above a specified value for specified time.

DTC B1042 and B1046 :

The resistance of driver or passenger seat belt pretensioner initiator circuit is below a specified value for specified time.

DTC B1043 and B1047 :

The voltage measured at driver or passenger seat belt pretensioner initiator circuit is below a specified value for specified time.

DTC B1044 and B1048 :

The voltage measured at driver or passenger seat belt pretensioner initiator circuit is above a specified value for specified time.

TABLE TEST DESCRIPTION

DTC B1041, B1042, B1043, B1044, B1045, B1046, B1047 and B1048 :

STEP 1 : Check whether malfunction is in seat belt pretensioner.
STEP 2 : Check seat belt pretensioner initiator circuit in seat belt pretensioner harness.
STEP 3 : Check seat belt pretensioner initiator circuit in air bag harness.

DIAGNOSTIC FLOW TABLE

DTC B1041 : DRIVER PRETENSIONER INITIATOR CIRCUIT RESISTANCE HIGH
DTC B1045 : PASSENGER PRETENSIONER INITIATOR CIRCUIT RESISTANCE HIGH

Step	Action	Yes	No
1	1) With ignition switch OFF, remove quarter lower trim of applicable side. 2) Disconnect connector “Q08” or “Q10” connector from seat belt pretensioner. 3) Check proper connection to applicable seat belt pretensioner at terminals in “Q08” or “Q10” connector. 4) If OK then connect special tools (A), (B) and (C) to “Q08” or “Q10” connector. With ignition switch ON, does DTC B1041 or B1045 still exist?	Go to step 2.	Ignition switch OFF, and replace seat belt pretensioner referring “Front Seat Belt” in Section 10.
2	1) With ignition switch OFF, disconnect special tools (A), (B) and (C) from “Q08” or “Q10” connector. 2) Disconnect connector “Q07” or “Q09” from air bag wire harness in floor harness. 3) Check proper connection to air bag wire harness at terminals in “Q07” or “Q09” connector. 4) If OK then connect special tools (B) and (D) to “Q07” or “Q09” connector. With ignition switch ON, does DTC B1041 or B1045 still exist?	Go to step 3.	Repair high resistance or open in “YEL” or “YEL/RED” wire circuit.

Step	Action	Yes	No
3	1) With ignition switch OFF, disconnect SDM connector “Q60”. 2) Check proper connection between “Q60-11” and “Q60-12” or “Q60-6” and “Q60-5”. 3) If OK, measure resistance with connected special tools (B) and (D). • DTC B1041 : between “Q60-12” and “Q60-11” terminals • DTC B1045 : between “Q60-5” and “Q60-6” terminals. Is resistance 4.5 Ω or less?	Substitute a known-good SDM and recheck.	DTC B1041 : Repair high resistance or open in “PNK” or “WHT” wire circuit. DTC B1045 : Repair high resistance or open in “BRN” or “LT GRN” wire circuit.

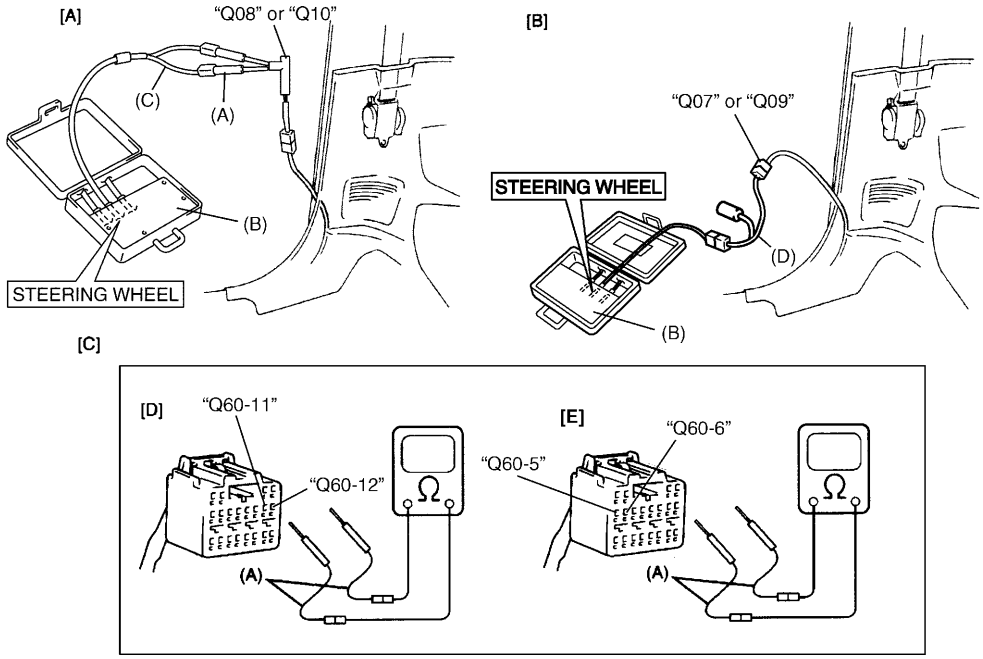

[A] : Fig. for STEP 1	[C] : Fig. for STEP 3	[E] : For DTC B1045
[B] : Fig. for STEP 2 and 3	[D] : For DTC B1041	

Special tool
(A) : 09932-76010
(B) : 09932-75010
(C) : 09932-78310
(D) : 09932-78340

NOTE:

Upon completion of inspection and repair work, perform the following items.

- **Reconnect all air bag system components, ensure all components are properly mounted.**
- **Clear diagnostic trouble codes referring to “DTC Clearance” in this section, if any.**
- **Repeat “Air Bag Diagnostic System Check” in this section to confirm that the trouble has been corrected.**

DTC B1042 : DRIVER PRETENSIONER INITIATOR CIRCUIT RESISTANCE LOW
DTC B1046 : PASSENGER PRETENSIONER INITIATOR CIRCUIT RESISTANCE LOW

Step	Action	Yes	No
1	1) With ignition switch OFF, remove quarter lower trim of applicable side. 2) Disconnect connector “Q08” or “Q10” connector from seat belt pretensioner. 3) Check proper connection to applicable seat belt pretensioner at terminals in “Q08” or “Q10” connector. 4) If OK then connect special tools (A), (B) and (C) to “Q08” or “Q10” connector. With ignition switch ON, does DTC B1042 or B1046 still exist?	Go to step 2.	Ignition switch OFF, and replace seat belt pretensioner referring “Front Seat Belt” in Section 10.
2	1) With ignition switch OFF, disconnect special tools (A), (B) and (C) from “Q08” or “Q10” connector. 2) Disconnect connector “Q07” or “Q09” from air bag wire harness in floor harness. 3) Check proper connection to air bag wire harness at terminals in “Q07” or “Q09” connector. 4) If OK then connect special tools (B) and (D) to “Q07” or “Q09” connector. With ignition switch ON, does DTC B1042 or B1046 still exist?	Go to step 3.	Repair short from “YEL” wire circuit to “YEL/RED” wire circuit or from “YEL” or “YEL/RED” wire circuit to other wire circuit.
3	1) With ignition switch OFF, disconnect SDM connector “Q60”. 2) Check proper connection between “Q60-11” and “Q60-12” or “Q60-6” and “Q60-5”. 3) If OK, measure resistance with connected special tools (B) and (D). • DTC B1042 : between “Q60-11” and “Q60-12” terminals • DTC B1046 : between “Q60-5” and “Q60-6” terminals. Is resistance 1.4 Ω or more?	Substitute a known-good SDM and recheck.	DTC B1042 : Repair short from “PNK” wire circuit to “WHT” wire circuit or from “PNK” or “WHT” wire circuit to other wire circuit. DTC B1046 : Repair short from “BRN” wire circuit to “LT GRN” wire circuit or from “BRN” or “LT GRN” wire circuit to other wire circuit.

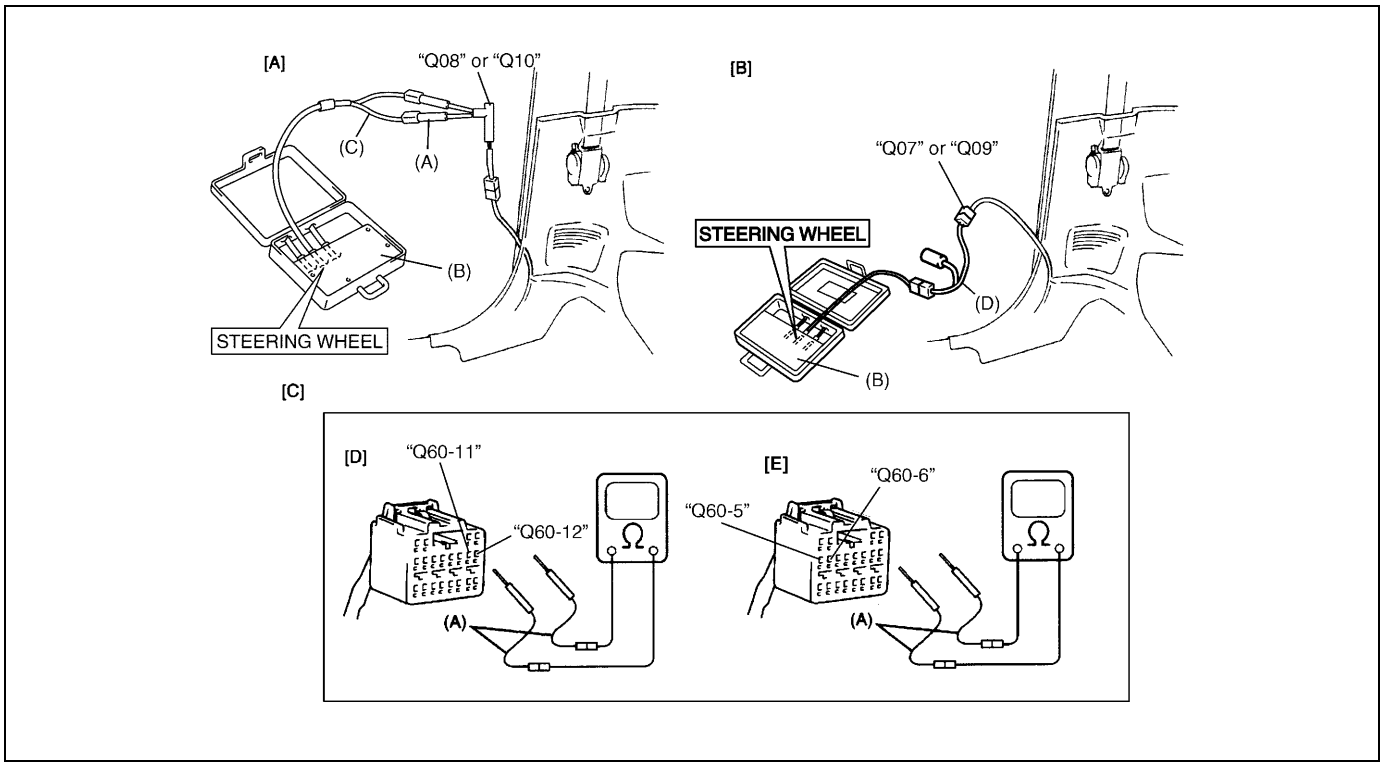

[A] : Fig. for STEP 1	[C] : Fig. for STEP 3	[E] : For DTC B1046
[B] : Fig. for STEP 2 and 3	[D] : For DTC B1042	

Special tool
(A) : 09932-76010
(B) : 09932-75010
(C) : 09932-78310
(D) : 09932-78340

NOTE:

Upon completion of inspection and repair work, perform the following items.

- **Reconnect all air bag system components, ensure all components are properly mounted.**
- **Clear diagnostic trouble codes referring to "DTC Clearance" in this section, if any.**
- **Repeat "Air Bag Diagnostic System Check" in this section to confirm that the trouble has been corrected.**

DTC B1043 : DRIVER PRETENSIONER INITIATOR CIRCUIT SHORT TO GROUND
DTC B1047 : PASSENGER PRETENSIONER INITIATOR CIRCUIT SHORT TO GROUND

Step	Action	Yes	No
1	1) With ignition switch OFF, remove quarter lower trim of applicable side. 2) Disconnect connector “Q08” or “Q10” connector from seat belt pretensioner. 3) Check proper connection to applicable seat belt pretensioner at terminals in “Q08” or “Q10” connector. 4) If OK then connect special tools (A), (B) and (C) to “Q08” or “Q10” connector. With ignition switch ON, does DTC B1043 or B1047 still exist?	Go to step 2.	Ignition switch OFF, and replace seat belt pretensioner referring “Front Seat Belt” in Section 10.
2	1) With ignition switch OFF, disconnect special tools (A), (B) and (C) from “Q08” or “Q10” connector. 2) Disconnect connector “Q07” or “Q09” from air bag wire harness in floor harness. 3) Check proper connection to air bag wire harness at terminals in “Q07” or “Q09” connector. 4) If OK then connect special tools (B) and (D) to “Q07” or “Q09” connector. With ignition switch ON, does DTC B1043 or B1047 still exist?	Go to step 3.	Repair short “YEL” or “YEL/RED” wire circuit to ground.
3	1) With ignition switch OFF, disconnect special tools (A) and (D) from seat belt pretensioner wire harness connector “Q07” or “Q09”. 2) Disconnect SDM connector “Q60” from SDM. 3) Measure resistance. • DTC B1043 : between “Q60-11” terminal and body ground, and between “Q60-12” terminal and body ground. • DTC B1047 : between “Q60-5” terminal and body ground, and between “Q60-6” terminal and body ground. Is resistance 1 MΩ or more?	Substitute a known-good SDM and recheck.	DTC B1043 : Repair short “WHT” or “PNK” wire circuit to ground. DTC B1047 : Repair short from “BRN” or “LT GRN” wire circuit to ground.

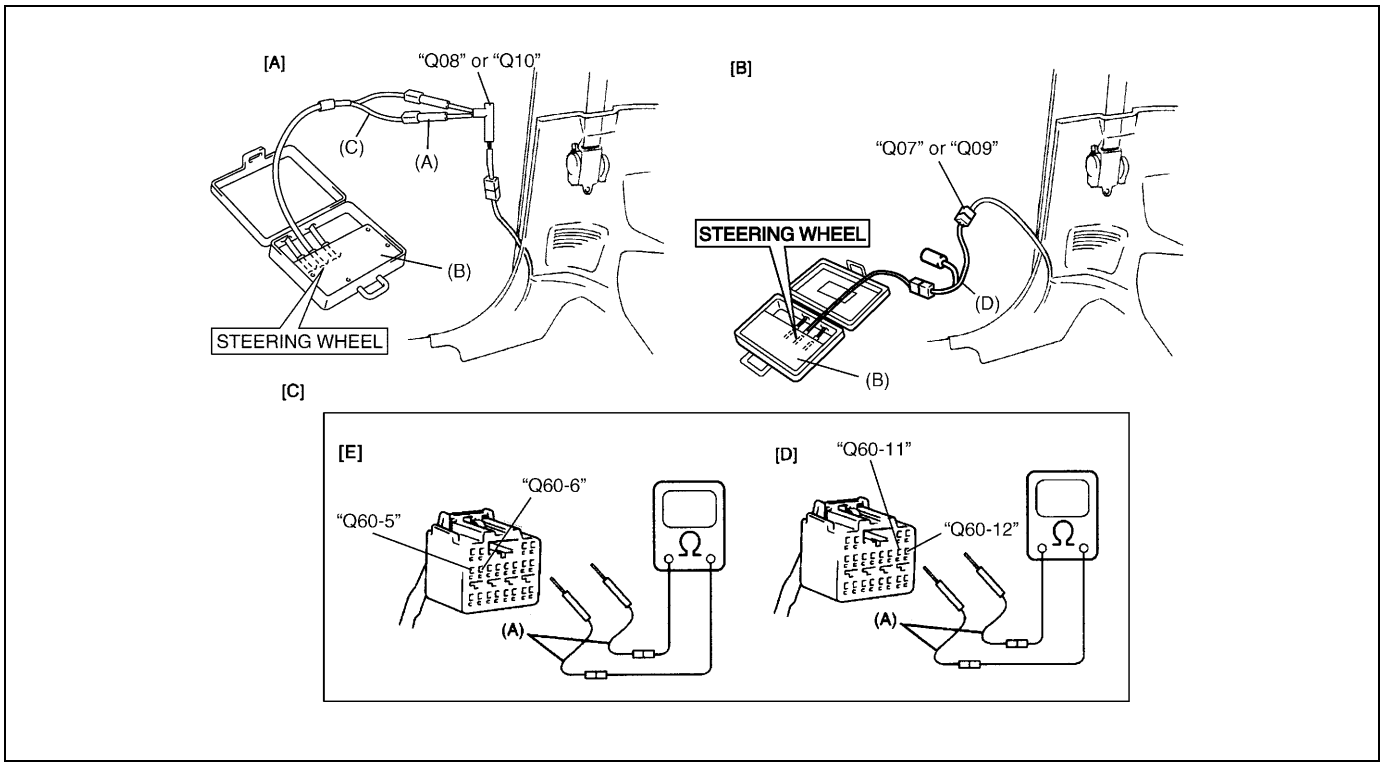

[A] : Fig. for STEP 1	[C] : Fig. for STEP 3	[E] : For DTC B1047
[B] : Fig. for STEP 2 and 3	[D] : For DTC B1043	

Special tool
(A) : 09932-76010
(B) : 09932-75010
(C) : 09932-78310
(D) : 09932-78340

NOTE:

Upon completion of inspection and repair work, perform the following items.

- **Reconnect all air bag system components, ensure all components are properly mounted.**
- **Clear diagnostic trouble codes referring to "DTC Clearance" in this section, if any.**
- **Repeat "Air Bag Diagnostic System Check" in this section to confirm that the trouble has been corrected.**

DTC B1044 : DRIVER PRETENSIONER INITIATOR CIRCUIT TO POWER CIRCUIT
DTC B1048 : PASSENGER PRETENSIONER INITIATOR CIRCUIT TO POWER CIRCUIT

Step	Action	Yes	No
1	1) With ignition switch OFF, remove quarter lower trim of applicable side. 2) Disconnect connector “Q08” or “Q10” connector from seat belt pretensioner. 3) Check proper connection to applicable seat belt pretensioner at terminals in “Q08” or “Q10” connector. 4) If OK then connect special tools (A), (B) and (C) to “Q08” or “Q10” connector. With ignition switch ON, does DTC B1044 or B1048 still exist?	Go to step 2.	Ignition switch OFF, and replace seat belt pretensioner referring “Front Seat Belt” in Section 10.
2	1) With ignition switch OFF, disconnect special tools (A), (B) and (C) from “Q08” or “Q10” connector. 2) Disconnect connector “Q07” or “Q09” from air bag wire harness in floor harness. 3) Check proper connection to air bag wire harness at terminals in “Q07” or “Q09” connector. 4) If OK then connect special tools (B) and (D) to “Q07” or “Q09” connector. With ignition switch ON, does DTC B1044 or B1048 still exist?	Go to step 3.	Repair short “YEL” or “YEL/RED” wire circuit to power circuit.
3	1) With ignition switch OFF, disconnect special tools (A) and (D) from seat belt pretensioner wire harness connector “Q07” or “Q09”. 2) Disconnect SDM connector “Q60” from SDM. 3) Measure voltage. • DTC B1044 : between “Q60-11” terminal and body ground, and between “Q60-12” terminal and body ground. • DTC B1048 : between “Q60-5” terminal and body ground, and between “Q60-6” terminal and body ground. With ignition switch ON, is voltage 1 V or less?	Substitute a known-good SDM and recheck.	DTC B1044 : Repair short “WHT” or “PNK” wire circuit to power circuit. DTC B1048 : Repair short from “BRN” or “LT GRN” wire circuit to power circuit.

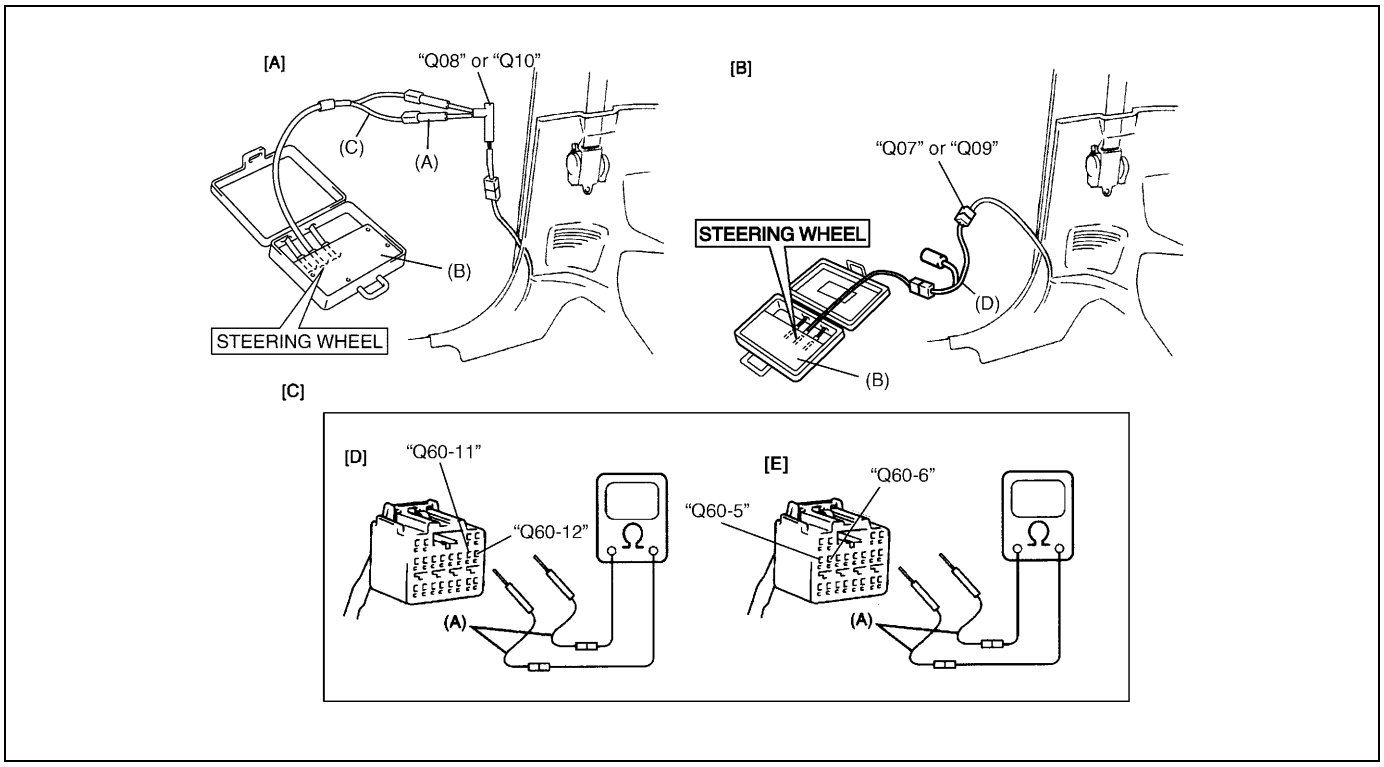

[A] : Fig. for STEP 1	[C] : Fig. for STEP 3	[E] : For DTC B1048
[B] : Fig. for STEP 2 and 3	[D] : For DTC B1044	

Special tool
(A) : 09932-76010
(B) : 09932-75010
(C) : 09932-78310
(D) : 09932-78340

NOTE:

Upon completion of inspection and repair work, perform the following items.

- **Reconnect all air bag system components, ensure all components are properly mounted.**
- **Clear diagnostic trouble codes referring to "DTC Clearance" in this section, if any.**
- **Repeat "Air Bag Diagnostic System Check" in this section to confirm that the trouble has been corrected.**

DTC B1051 – Frontal Crash Detected (System Activation Command Outputted)

CAUTION:

Be sure to perform "Air Bag Diagnostic System Check" in this section before starting diagnosis according to flow table.

DTC WILL SET WHEN

The SDM detects a frontal crash of sufficient force to warrant activation of the air bag system. (SDM outputs a deployment command.)

TABLE TEST DESCRIPTION

STEP 1 : Check that DTC B1051 has been set although air bag has not been deployed.
STEP 2 : Check that DTC has been set due to failure of SDM.

Step	Action	Yes	No
1	1) Ignition switch OFF. Has air bag (inflator) module deployed?	Replace components and perform inspections as directed in "Repairs and Inspections Required after an Accident" in this section.	Go to step 2.
2	1) Inspect front of vehicle and undercarriage for signs of impact. Are there signs of impact?	Replace components and perform inspections as directed in "Repairs and Inspections Required after an Accident" in this section.	Substitute a known-good SDM and recheck.

NOTE:

Upon completion of inspection and repair work, perform the following items.

- **Reconnect all air bag system components, ensure all components are properly mounted.**
- **Repeat "Air Bag Diagnostic System Check" in this section to confirm that the trouble has been corrected.**

DTC B1071 – Internal SDM Fault

DTC WILL SET WHEN

An internal SDM fault is detected by SDM.

CAUTION:

Be sure to perform "Air Bag Diagnostic System Check" in this section before starting diagnosis according to the following diagnostic procedures.

NOTE:

DTC B1071 can never be cleared once it has been set.

1) Ignition switch OFF.
2) Replace SDM referring to "SDM" in this section.
3) Repeat "Air Bag Diagnostic System Check" in this section.

DTC B1013 – System Specifications Different from SDM Specifications

DTC WILL SET WHEN

Specifications of the air bag system differ from those of SDM.

CAUTION:

Be sure to perform "Air Bag Diagnostic System Check" in this section before starting diagnosis according to the following diagnostic procedures.

1) Ignition switch OFF.
2) Replace SDM referring to "SDM" in this section.
3) Repeat "Air Bag Diagnostic System Check" in this section.

On-vehicle Service

Service Precautions

Service and diagnosis

WARNING/CAUTION labels are attached on each part of air bag system components (SDM, air bag (inflator) modules and seat belt pretensioners). Be sure to follow the instructions.

WARNING:

- **If the air bag system and another vehicle system both need repair, Suzuki recommends that the air bag system be repaired first, to help avoid unintended air bag system activation.**
- **Do not modify the steering wheel, dashboard or any other on or around air bag system components. Modifications can adversely affect air bag system performance and lead to injury.**
- **Failure to follow procedures could result in possible air bag system activation, personal injury or unneeded air bag system repairs.**

- Many of service procedures require disconnection of “AIR BAG” fuse and air bag (inflator) module(s) (driver and passenger) from initiator circuit to avoid an accidental deployment.
- Do not apply power to the air bag system unless all components are connected or a diagnostic chart requests it, as this will set a diagnostic trouble code (DTC).
- The “Air Bag Diagnostic System Check” must be the starting point of any air bag diagnostics. The “Air Bag Diagnostic System Check” will verify proper “AIR BAG” warning lamp operation and will lead you to the correct table to diagnose any air bag malfunctions. Bypassing these procedures may result in extended diagnostic time, incorrect diagnosis, and incorrect parts replacements.
- Never use air bag component parts from another vehicle.
- If the vehicle will be exposed to temperatures over 93°C (200°F) (for example, during a paint baking process), remove the air bag system components beforehand to avoid component damage or unintended system activation.
- When handling the air bag (inflator) modules (driver and passenger), seat belt pretensioners (driver and passenger) or SDM, be careful not to drop it or apply an impact to it. If an excessive impact was applied (e.g., dropped from a height of 90 cm (3 ft) or more), never attempt disassembly or repair but replace it with a new one.
- When using electric welding, be sure to disconnect air bag (inflator) module connectors (driver and passenger) and seat belt pretensioner connectors (driver and passenger) respectively.
- When applying paint around the air bag system related parts, use care so that the harness or connector will not be exposed to the paint mist.
- Never expose air bag system component parts directly to hot air (drying or baking the vehicle after painting) or flames.

WARNING:

When performing service on or around air bag system components or air bag wiring, disable the air bag system temporarily referring to “Disabling Air Bag System” in this section.
Failure to follow procedures could result in possible air bag system activation, personal injury or unneeded air bag system repairs.

Disabling air bag system

1) Turn steering wheel so that vehicle's wheels (front tires) and pointing straight ahead.
2) Turn ignition switch to "LOCK" position and remove key.

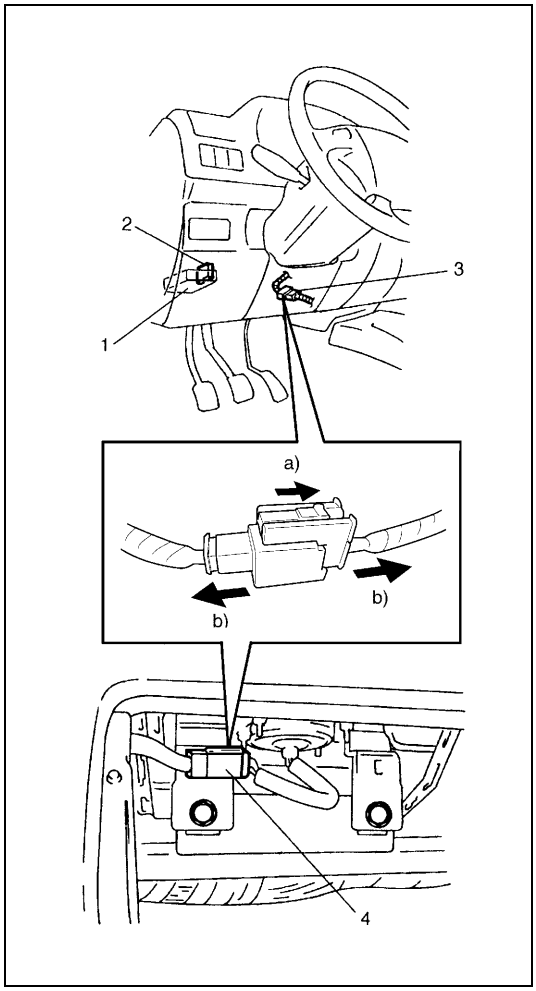

3) Remove "AIR BAG" fuse (2) from fuse box (1).
4) Disconnect Yellow connector (3) of contact coil and combination switch assembly.
   a) Release locking of lock slider.
   b) After unlocked, disconnect connector.
5) Pull out glove box while pushing its stopper from both right and left sides and disconnect Yellow connector (4) of passenger air bag (inflator) module.
   a) Release locking of lock slider.
   b) After unlocked, disconnect connector.

NOTE:

With "AIR BAG" fuse removed and ignition switch ON, "AIR BAG" warning lamp will be ON.
This is normal operation and does not indicate a air bag system malfunction.

Enabling air bag system

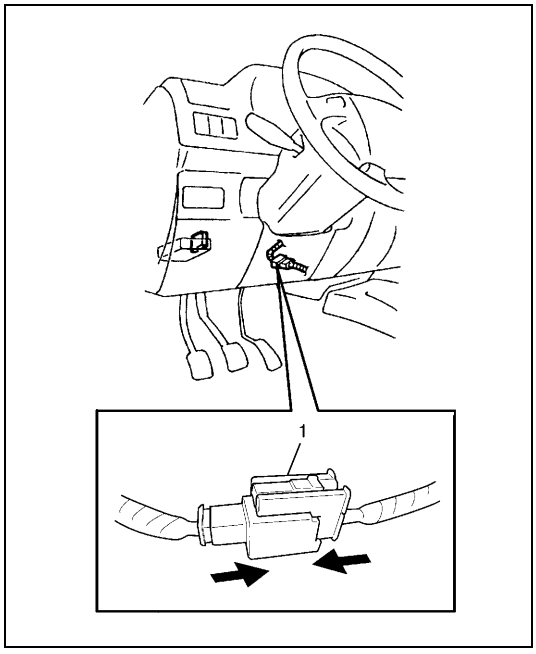

1) Turn ignition switch to "LOCK" position and remove key.
2) Connect Yellow connector (1) of contact coil and combination switch assembly, by pushing connector till click is heard from it.

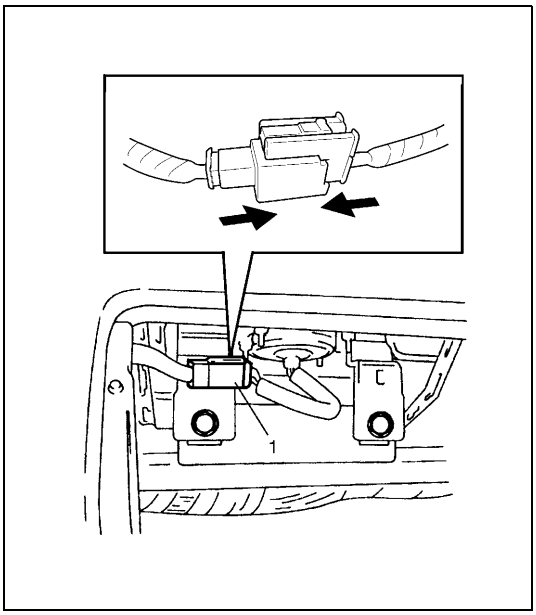

3) Connect Yellow connector (1) of passenger air bag (inflator) module by pushing connector till click is heard from it.
4) Install glove box.
5) Install “AIR BAG” fuse to fuse box.
6) Turn ignition switch to ON position and verify that “AIR BAG” warning lamp flashes 6 times and then turns OFF.
   If it does not operate as described, perform “Air Bag Diagnostic System Check” in this section.

Handling and storage

SDM

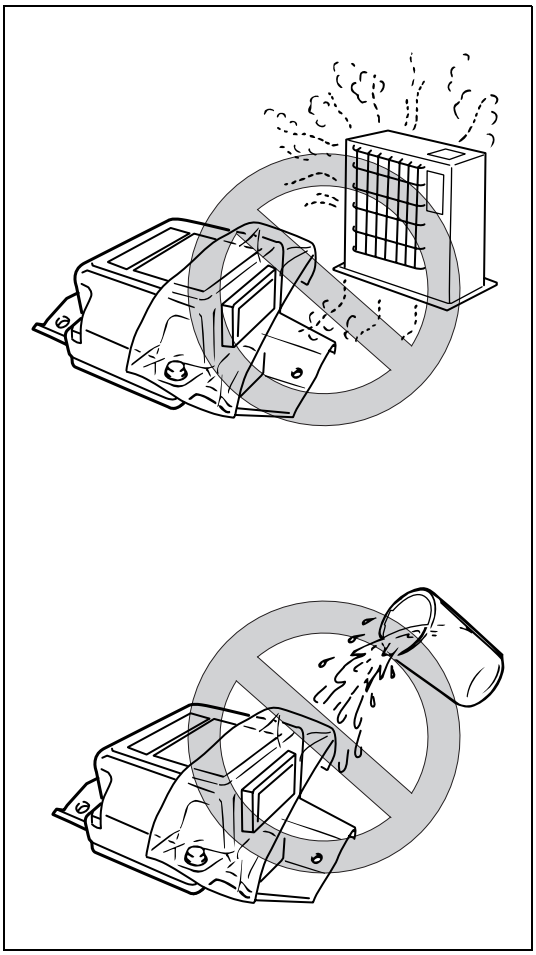

WARNING:

Never power up air bag system when SDM is not rigidly attached to the vehicle. Otherwise, personal injury may result.

CAUTION:

After detecting one time of such collision as to meet deployment conditions, the SDM must not be used. Refer to “Air Bag Diagnostic System Check” in this section when checking the SDM.

- Never attempt disassembly of SDM.
- When storing SDM, select a place where neither high temperature nor high humidity is anticipated and oil, water and dust are kept off.
- If SDM was dropped from a height of 90 cm (3 ft) or more or if it is found to be damaged or deformed, replace it with a new one.
- If installation part of SDM was damaged, repair that part completely before reinstallation.
- All SDM and mounting bracket fasteners must be carefully torqued and the arrow must be pointed toward the front of the vehicle to ensure proper operation of the air bag system.

LIVE (UNDEPLOYED) AIR BAG (INFLATOR) MODULES

Special care is necessary when handling and storing a live (undeployed) air bag (inflator) modules.
The rapid gas generation produced during deployment of the air bag could cause the air bag (inflator) module, or an object in front of the air bag (inflator) module, to be thrown through the air in the unlikely event of an accidental deployment.

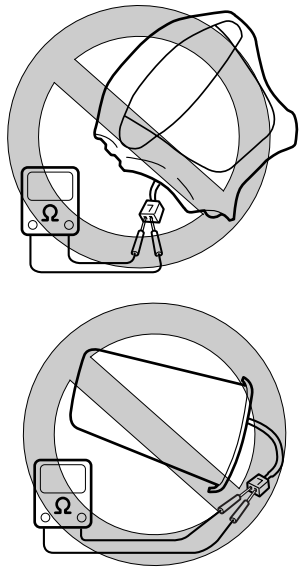

WARNING:

Never attempt to measure the resistance of the air bag (inflator) modules (driver and passenger). It is very dangerous as the electric current from the tester may deploy the air bag.

- Never attempt disassembly of the air bag (inflator) modules.
- If any abnormality is found, be sure to replace it with new one as an assembly.
- When an abnormality is noted as existing in the live (undeployed) air bag (inflator) module, be sure to deploy it before discarding it.
- When grease, cleaning agent, oil, water, etc., got on the air bag (inflator) modules (driver and passenger), wipe it off immediately with a dry cloth.
- If air bag (inflator) module was dropped from a height of 90 cm (3 ft) or more, it should be replaced with a new one as an assembly.

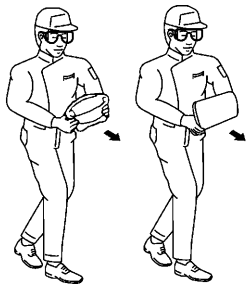

WARNING:

- **For handling and storage of a live air bag (inflator) module, select a place where the ambient temperature below 65°C (150°F), without high humidity and away from electric noise.**
- **When carrying a live air bag (inflator) module, make sure the bag opening is pointed away from you. In case of an accidental deployment, the bag will then deploy with minimal chance of injury. Never carry the air bag (inflator) module by the wires or connector on the underside of the module.**

Otherwise, personal injury may result.

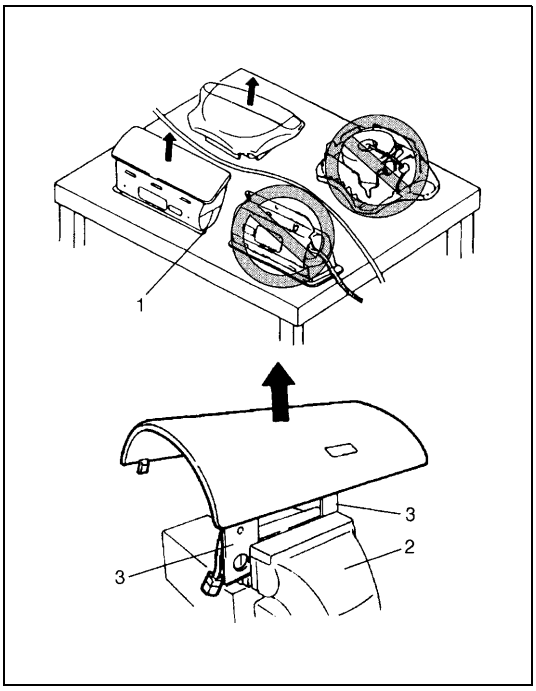

WARNING:

When placing a live air bag (inflator) module on bench or other surface, always face the bag up, away from the surface. As the live passenger air bag (inflator) module must be placed with its bag (trim cover) facing up, place it on the workbench with a slit (1) or use the workbench vise (2) to hold it securely at its lower mounting bracket (3).
It is also prohibited to place anything on top of the trim cover and stack air bag (inflator) modules.
This is necessary so that a free space is provided to allow the air bag to expand in the unlikely event of accidental deployment.
Otherwise, personal injury may result.

LIVE (INACTIVATED) SEAT BELT PRETENSIONER

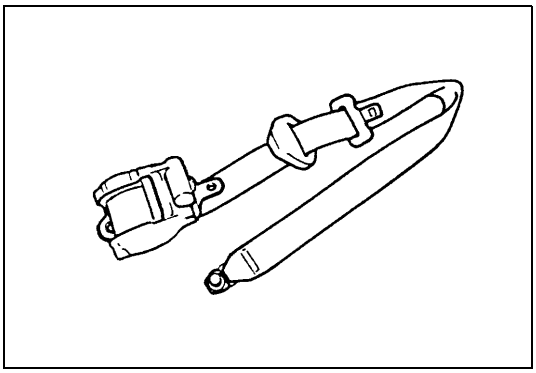

Special care is necessary when handling and storing a live (inactivated) seat belt pretensioners.
Also, when the seat belt pretensioners activate, gas is generated and the seat belt is retracted into the retractor assembly quickly.
Note, therefore, that if they activate accidentally, the seat belt pretensioners and other object(s) around them may be thrown through the air.

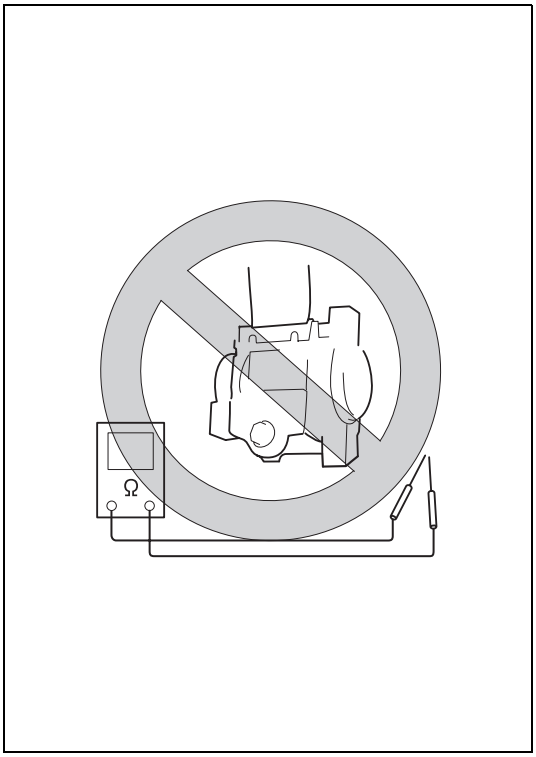

WARNING:

Never attempt to measure the resistance of the seat belt pretensioners. It is very dangerous as the electric current from the tester may activate pretensioner.

- Never attempt to disassemble the seat belt pretensioners (retractor assembly).
- If any abnormality is found, be sure to replace it with new one as an assembly.
- When an abnormality is noted as existing in the live (inactivated) seat belt pretensioner, be sure to activate it before discarding it.
- When grease, cleaning agent oil, water, etc., got on the seat belt pretensioners (retractor assembly), wipe it off immediately with a dry cloth.
- If seat belt pretensioner was dropped from a height of 90 cm (3 ft) or more, it should be replaced with a new one as an assembly.

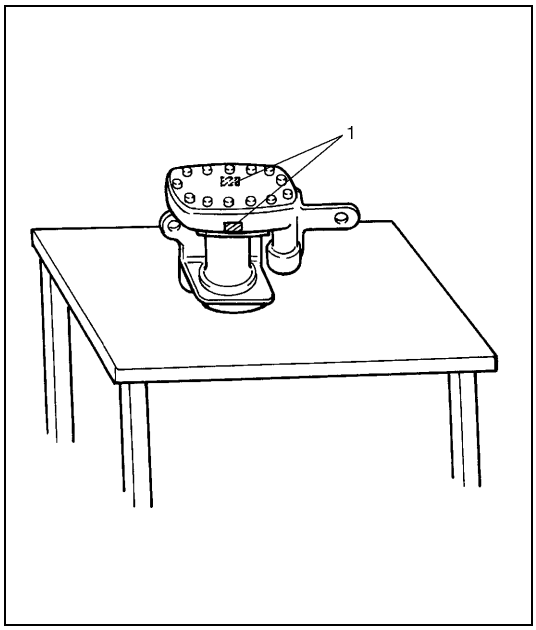

WARNING:

- **For handling and storage of a live seat belt pretensioner, select a place where the ambient temperature below 65°C (150°F), without high humidity and away from electric noise.**
- **Do not carry the seat belt pretensioner by webbing.**
- **When placing a live seat belt pretensioner on the workbench or other surface, be sure not to lay it with its exhaust hole (1) provided side facing down. It is also prohibited to put something on its face with an exhaust hole (1) or to put a seat belt pretensioner on top of another.**

Otherwise, personal injury may result.

DEPLOYED AIR BAG (INFLATOR) MODULE AND ACTIVATED SEAT BELT PRETENSIONER

WARNING:

- **The air bag (inflator) module and seat belt pretensioner immediately after deployment/activation is very hot. Wait for at least 30 minutes to cool it off before proceeding the work.**
- **Do not apply water, oil, etc. to deployed air bag (inflator) module and to activate seat belt pretensioner.**
- **After an air bag (inflator) module has been deployed, the surface of the air bag may contain a powdery residue. This powder consists primarily of cornstarch (used to lubricate the bag as it inflates) and by-products of the chemical reaction. As with many service procedures, gloves and safety glasses should be worn.**
- **Wash your hands with mild soap and water after completing the work.**

Refer to the procedure described under “Deployed Air Bag (Inflator) Module and Activated Seat Belt Pretensioner Disposal” in this section.

Disposal

Do not dispose of the live (undeployed) air bag (inflator) modules and the live (inactivated) seat belt pretensioners. When disposal is necessary, be sure to deploy/activate the air bag and seat belt pretensioner according to deployment/activation procedure described in “Air Bag (Inflator) Module and Seat Belt Pretensioner Disposal” in this section.

WARNING:

Failure to follow proper air bag (inflator) module and seat belt pretensioner disposal procedures can result in air bag deployment and pretensioner activation which could cause personal injury. Undeployed air bag (inflator) module and inactivated seat belt pretensioner must not be disposed of through normal refuse channels.
The undeployed air bag (inflator) module and inactivated seat belt pretensioner contain substances that can cause severe illness or personal injury if the sealed container is damaged during disposal.

Air bag wire harness and connector in instrument panel harness, floor harness and pretensioner harness

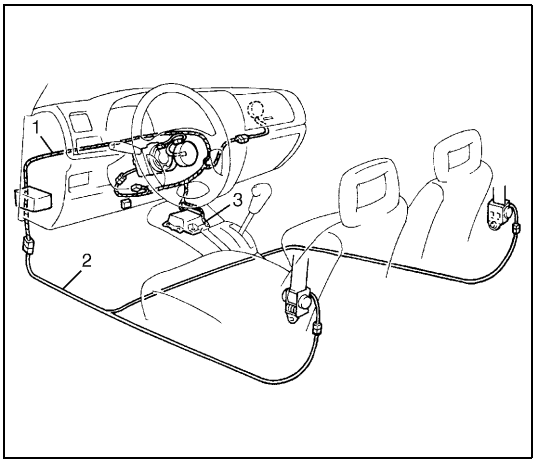

Air bag wire harness (1) is included in instrument panel harness, floor harness and pretensioner harness. The air bag wire harness (1) can be identified easily as it is covered with a yellow protection tube and it has yellow connectors. Be very careful when handling it.

- When an open in air bag wire harness (1), damaged wire harness, connector or terminal is found, replace wire harness, connectors and terminals as an assembly.
- When installing it, be careful so that the air bag wire harness (1) is not caught or does not interfere with other parts.
- Make sure all air bag system grounding point (2) is clean and ground is securely fastened for optimum metal-to-metal contact. Poor grounding can cause intermittent problems that are difficult to diagnose.

Repairs and Inspections Required after an Accident

CAUTION:

- **All air bag system components, including the electrical harness (component mounting points), must be inspected after an accident. If any components are damaged or bent, they must be replaced even if air bag system activation did not occur.**
- **Never use air bag system parts from another vehicle.**
- **Do not attempt to service the parts below. Service of these parts is by replacement only.**
  - **Driver/Passenger air bag (inflator) module, Driver/Passenger seat belt pretensioner**
  - **SDM**
  - **Contact coil and combination switch assembly**
  - **Air bag wire harness in instrument panel harness, floor harness and pretensioner harness.**
- **Proper operation of the air bag system requires that any repairs to the vehicle structure return it to its original production configuration.**

CAUTION:

After detecting one time of such collision as to meet deployment conditions, the SDM must not be used. Refer to "Air Bag Diagnostic System Check" in this section when checking the SDM.

Accident with Deployment/Activation - Component Replacement

The following components must be replaced.

- Driver and passenger air bag (inflator) modules
- Driver and passenger seat belt pretensioners
- SDM

Accident with or without Deployment/Activation - Component Inspections

Certain air bag system components must be inspected after any crash, whether the air bag system activated or not.

Those components are :

- Steering column and shaft joints
  - Check for length, damage and bend according to "Checking Steering Column for Accident Damage" in Section 3C.

If any faulty condition is found in above checks, replace faulty part.

- Steering column bracket and capsules
  - Check for damage and bent.

If any faulty condition is found in above checks, replace faulty part.

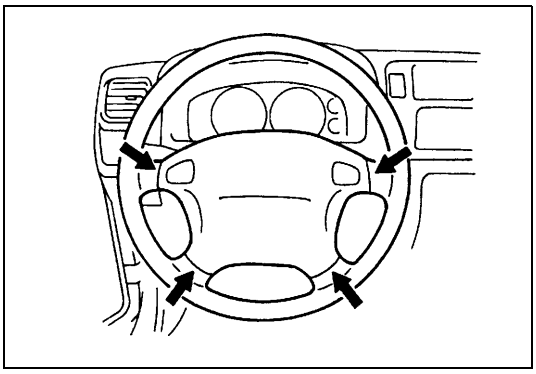

- Steering wheel and driver air bag (inflator) module
  - Check for damage or air bag (inflator) module fitness.
  - Check trim cover (pad surface) for cracks.
  - Check wire harness and connector for damage or tightness.

If any faulty condition is found in above checks, replace faulty part.

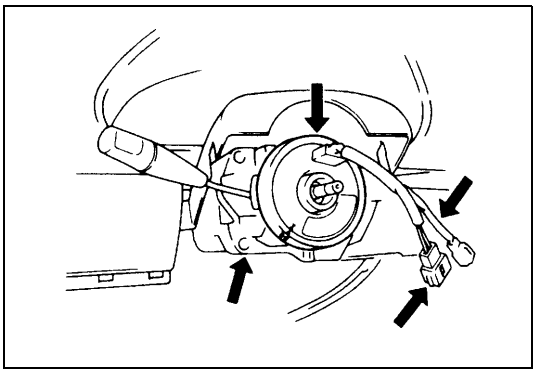

- Contact coil and combination switch assembly
  - Check wire harness and connectors for damage or tightness.
  - Check contact coil case for damage.

If any faulty condition is found in above checks, replace.

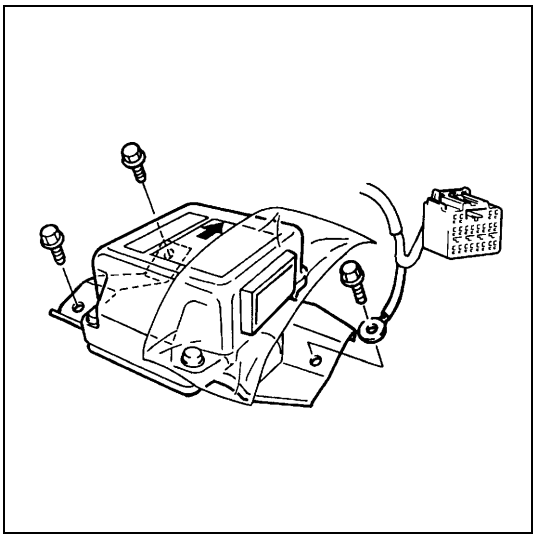

- SDM and SDM plate
  - Check for external damage such as deformation, scratch, crack, peeled paint, etc.
  - Check that SDM cannot be installed properly due to a cause in itself. (There is a gap between SDM and SDM plate, or it cannot be fixed securely.)
  - Check that connector or lead wire of SDM has a scorching, melting or damage.
  - Check that connector is connected securely or locked.
  - Check SDM connector and terminals for tightness.
  - Check SDM sets a diagnostic trouble code referring to “DTC Check” in this section, and the diagnostic table leads to a malfunctioning SDM.

If any faulty condition is found in above checks, replace.

- Instrument panel member and reinforcement
  - Check for any distortion, bending, cracking or other damage.

If any faulty condition is found in above checks, replace.

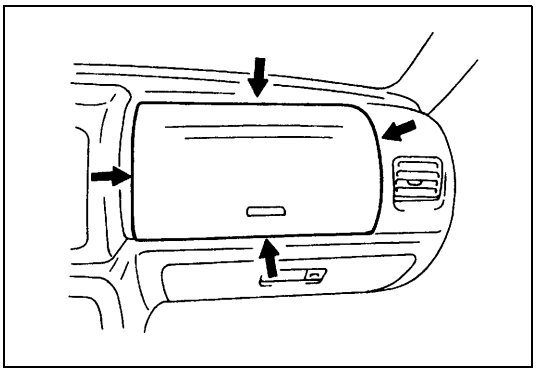

- Passenger air bag (inflator) module
  - Check for dents, cracks, damage or fitness.
  - Check trim cover for cracks or deformities.
  - Check harness and connector for damage or tightness.

If any faulty condition is found in above checks, replace.

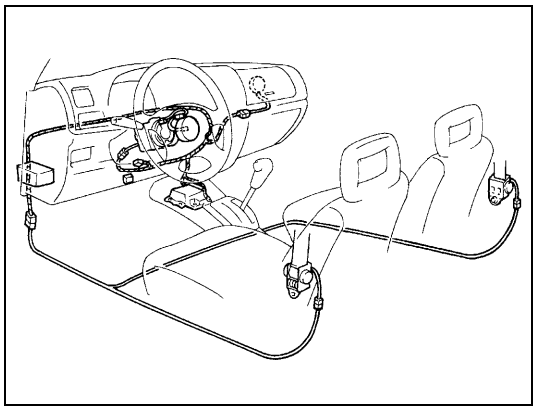

- Air bag wire harness and connections
  - Check for damages, deformities or poor connections referring to “Intermittents and Poor Connections” in this section.
  - Check wire harness clamps for tightness.

If any faulty condition is found, correct or replace.

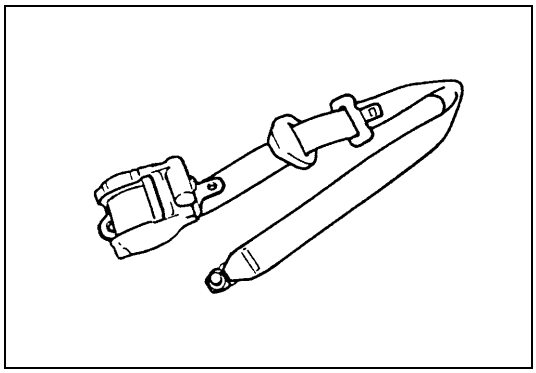

- Seat belt pretensioner
  - Check for dents, cracks, damage or fitness
  - Check harness and connector for damage or tightness.

If any faulty condition is found in above checks, replace.

- Seat belts and mounting points
  - Refer to “Front Seat Belt” in Section 10.
- “AIR BAG” warning lamp
  - After vehicle is completely repaired, perform “Air Bag Diagnostic System Check” in this section.

SDM

WARNING:

During service procedures, be very careful when handling a Sensing and Diagnostic Module (SDM).
Be sure to read "Service Precautions" in this section before starting to work and observe every precaution during work. Neglecting them may result in personal injury or inactivation of the air bag system when necessary.

REMOVAL

1) Disconnect negative cable at battery.
2) Disable air bag system referring to "Disabling Air Bag System" in this section.
3) Remove center console box (1) by removing screws.
4) Disconnect SDM connector (2) from SDM (3).
5) Remove SDM (3) with SDM plate (4) as an assembly from vehicle.

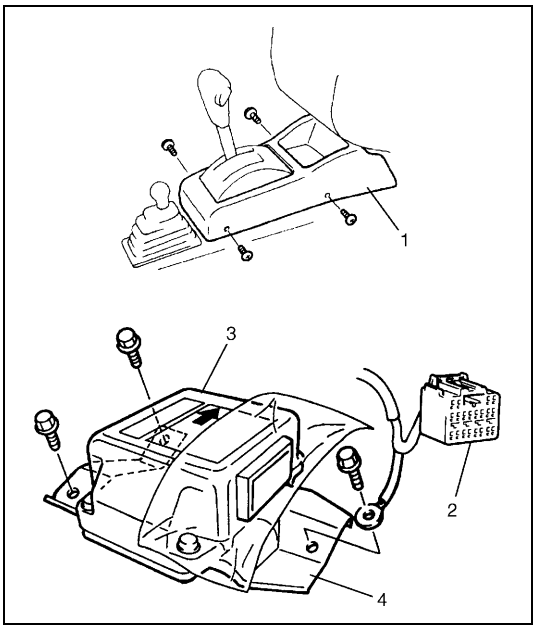

CAUTION:

Do not separate SDM (3) and SDM plate (4).

INSPECTION

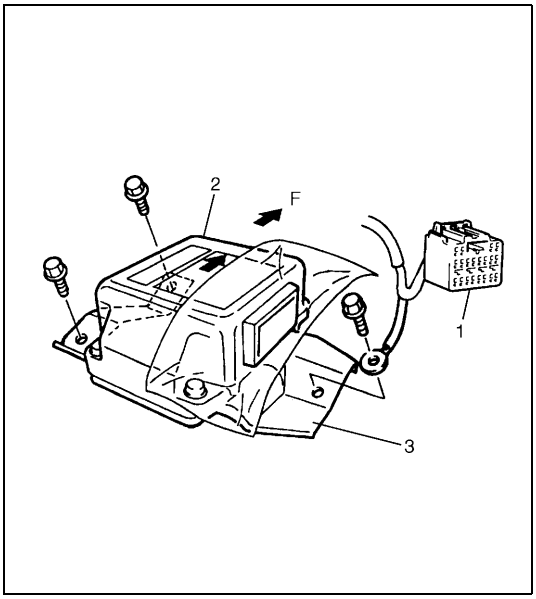

CAUTION:

- **Do not connect a tester whatever type it may be.**
- **Never repair or disassemble SDM (3).**
- **If SDM has been dropped from a height of 90 cm (3 ft) or more, or if there are cracks, dents or other defects in the case or plate, replace it with a new one.**

- Check SDM (2) and SDM plate (3) for dents, cracks or deformation.
- Check SDM connector (1) for damage, cracks or lock mechanism.
- Check SDM terminal for bent, corrosion or rust.

If any faulty condition is found in above checks, replace.

F : Forward

INSTALLATION

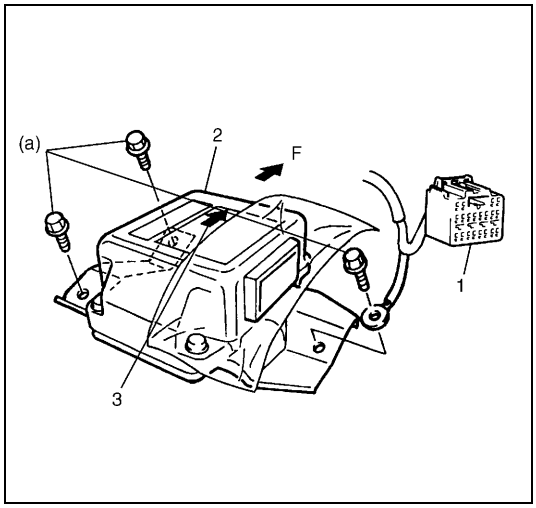

For installation, reverse removal procedure noting the following points.

- Ensure that arrow (3) on the SDM (2) is pointing toward the front of the vehicle.
- Tighten SDM bolts to specified torque.

Tightening torque
SDM mounting bolt (a) : 6 N·m (0.6 kg-m, 4.5 lb-ft)

- Connect SDM connector (1) to SDM (2) securely.
- Enable air bag system referring to “Enabling Air Bag System” in this section.

F : Forward

Passenger Air Bag (Inflator) Module

WARNING:

- **Never attempt to disassemble or repair the passenger air bag (inflator) module. If any abnormality is found, be sure to replace it with new one as an assembly.**
- **Be sure to read “Service Precautions” in this section before starting to work and observe every precaution during work. Neglecting them may result in personal injury or undeployment of the air bag when necessary.**

REMOVAL

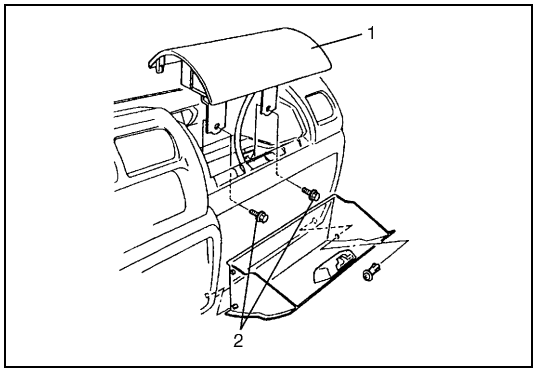

1) Disconnect negative cable at battery.
2) Disable air bag system referring to “Disabling Air Bag System” in this section.
3) Remove passenger air bag (inflator) module attaching bolts (2) and passenger air bag (inflator) module (1) from vehicle.

INSPECTION

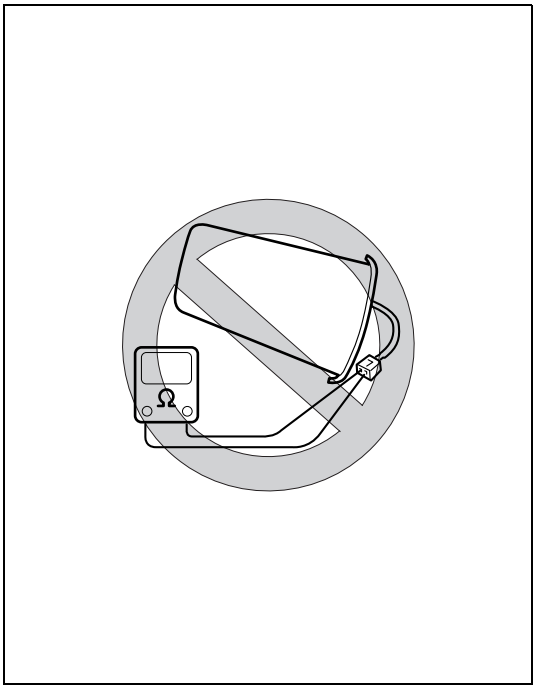

WARNING:

Never measure resistance of passenger air bag (inflator) module or disassemble it. Otherwise personal injury may result.

CAUTION:

If air bag (Inflator) module was dropped from a height or 90 cm (3 ft) or more, it should be replaced.

Check air bag (inflator) module appearance visually for the following symptoms and if any one of them is applicable, replace with a new one.

- Air bag has deployed.
- There is a crack in trim cover (pad surface).
- Wire harness or connector is damaged.
- Air bag (inflator) module is damaged or a strong impact was applied to it.

INSTALLATION

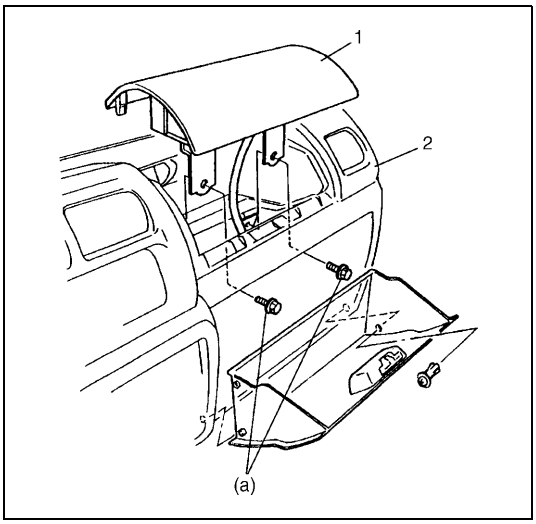

1) Install passenger air bag (inflator) module (1) to instrument panel (2).
2) Tighten passenger air bag (inflator) module attaching bolts to specified torque.

   Tightening torque
   Passenger air bag (inflator) module mounting bolt
   (a) : 23 N·m (2.3 kg-m, 16.5 lb-ft)

3) Connect negative cable to battery.
4) Enable air bag system. Refer to “Enabling Air Bag System” in this section.

Driver Air Bag (Inflator) Module

Refer to “Driver Air Bag (Inflator) Module” in Section 3C for removal, inspection and installation.

Contact Coil and Combination Switch Assembly

Refer to “Contact Coil and Combination Switch Assembly” in Section 3C for removal, inspection and installation.

Seat Belt Pretensioner

Refer to “Front Seat Belt” in Section 10 for removal, inspection and installation.

Air Bag (Inflator) Module and Seat Belt Pretensioner Disposal

WARNING:

Failure to follow proper air bag (inflator) module and seat belt pretensioner disposal procedures can result in air bag deployment and pretensioner activation which may cause personal injury.
Do not dispose of live (undeployed) air bag (inflator) modules and seat belt pretensioners. Because undeployed air bag (inflator) module/inactivated seat belt pretensioner must not be disposed of through normal refuse channels.
Undeployed air bag (inflator) module and inactivated seat belt pretensioner contain substances that can cause severe illness or personal injury if sealed container is damaged during disposal.

Air bag (inflator) module/seat belt pretensioner can be deployed/activated inside or outside of vehicle. Deployment/Activation method used depends upon final disposition of vehicle. Review the following instructions in order to determine which will work best in a given situation.

Deployment/Activation Outside of Vehicle :
When you intend to return the vehicle to service, deploy the air bag (inflator) module(s) or activate seat belt pretensioner(s) outside of the vehicle.

Deployment/Activation Inside of Vehicle :
When the vehicle will be destroyed, or salvaged for component parts, deploy the air bag modules and/or activate seat belt pretensioners installed on vehicle.

WARNING:

The following precautions must be observed for this work. Failure to observe any of them may result in personal injury.

- **Procedure should be followed strictly as described here.**
- **Be sure to read “Service Precautions” in this section beforehand.**
- **To avoid accidental deployment/activation, this work should be performed by no more than one person.**
- **Since smoke is produced when air bag (inflator) module is deployed and pretensioner is activated, select well-ventilated area.**
- **Air bag (inflator) module and seat belt pretensioner will immediately deploy/activate when 12 volts vehicle battery is connected to it. Wear safety glasses throughout this entire deployment/activation and disposal procedure.**
- **Wear suitable ear protection when deploying air bag (inflator) module/activating seat belt pretensioner. Also, advise those who are in area close to deployment/activation site to wear suitable ear protection.**
- **Do not deploy/activate two or more air bag system components (air bag (inflator) modules and seat belt pretensioners) at the same time.**
- **Never connect deployment harness to any 12 volts vehicle battery before connecting deployment harness to air bag (inflator) module and seat belt pretensioner. Deployment harness shall remain shorted and not be connected to 12 volts vehicle battery till you are ready to deploy air bag (inflator) module or activate seat belt pretensioner.**

Deployment/Activation Outside of Vehicle

When you intend to return the vehicle to service, deploy the air bag (inflator) module(s) or activate seat belt pretensioner(s) outside of the vehicle.

1) Turn ignition switch to “LOCK” position and remove key.
2) Wear safety glasses during this deployment/activation procedure.

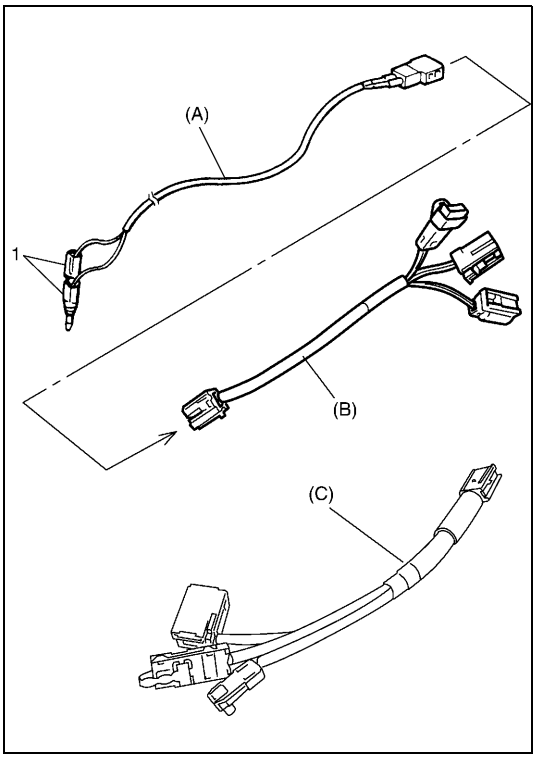

3) Check that there is no open, short or damage in special tools (deployment harness (A), adapter cable (B) and adapter cable (C)). If any faulty is found, do not use it and be sure to use new special tool.

Special tool
(A) : 09932-75031
(B) : 09932-78332
(C) : 09932-78320

NOTE:

If faulty seat belt pretensioner connector of adapter cable (C) is found, replace it to spare connector (special tool).

4) Short two deployment harness leads (1) together by fully seating one banana plug into the other.

WARNING:

Deployment harness (A) shall remain shorted and not be connected to 12 volts vehicle battery till you are ready to deploy air bag module or activate seat belt pretensioner.

5) Remove applicable air bag (inflator) module or seat belt pretensioner as follows.
- For driver air bag (inflator) module
  Remove driver air bag (inflator) module referring to “Driver Air Bag (Inflator) Module” in Section 3C.
- For passenger air bag (inflator) module
  Remove passenger air bag (inflator) module referring to “Passenger Air Bag (inflator) Module” in this section.
- For seat belt pretensioner
  Remove seat belt referring to “Front Seat Belt with Pretensioner” in Section 10.

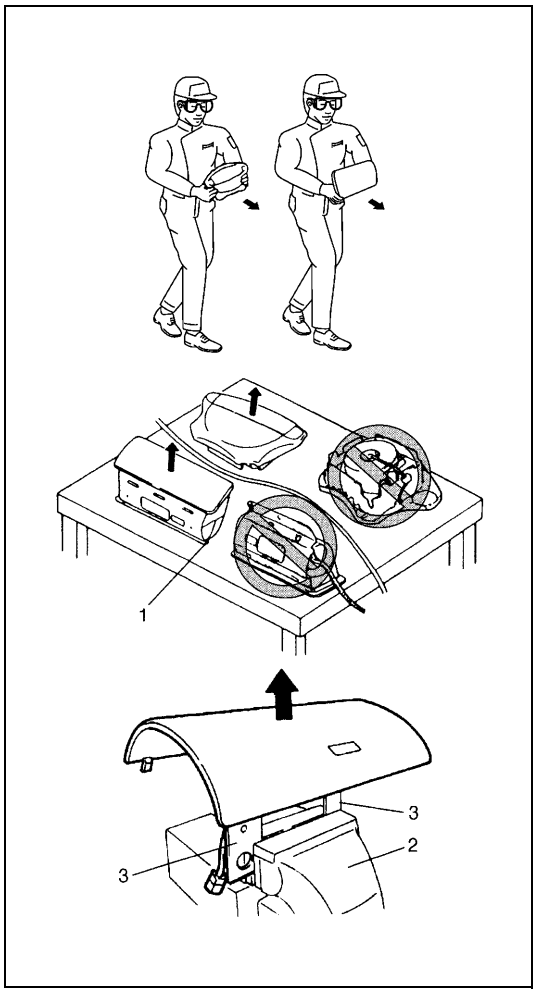

WARNING:

- **For handing and storage of live air bag (inflator) module, select place where ambient temperature below 65°C (150°F), without high humidity and away from electric noise.**
- **Always carry live air bag (inflator) module with trim cover away from you.**
- **When storing live air bag (inflator) module or when leaving live air bag (inflator) module unattended on bench or other surface, always face trim cover up and away from surface. As the live passenger air bag (inflator) module must be placed with its bag (trim cover) facing up, place it on the work bench with a slit (1) or use the work bench vise (2) to hold it securely at its lower mounting bracket (3). It is also prohibited to place anything on top of the trim cover and stack air bag (inflator) modules. This is necessary so that free space is provided to allow air bag (inflator) module to expand in the unlikely event of accidental deployment.**

Failure to follow procedures may result in personal injury.

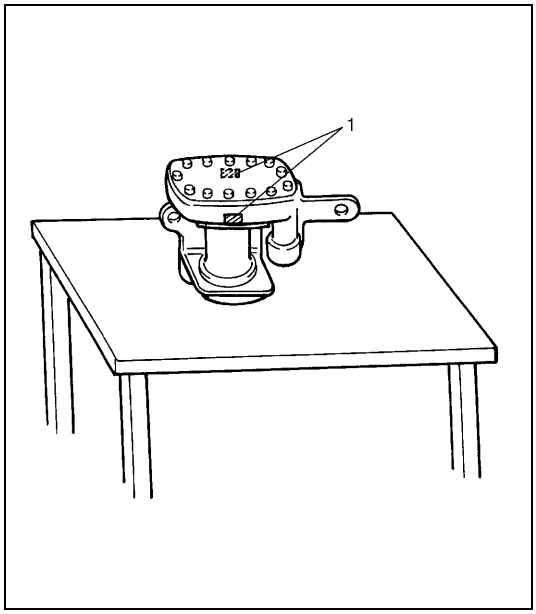

WARNING:

- **For handing and storage of a live seat belt pretensioner, select a place where the ambient temperature below 65°C (150°F), without high humidity and away from electric noise.**
- **Do not carry the seat belt pretensioner by webbing.**
- **When placing a live seat belt pretensioner on the workbench or other surface, be sure not to lay it with its exhaust hole (1) provided side facing down. It is also prohibited to put something on its face with an exhaust hole (1) or to put a seat belt pretensioner on top of another.**

Otherwise, personal injury may result.

6) Set air bag (inflator) module or seat belt pretensioner as follows.

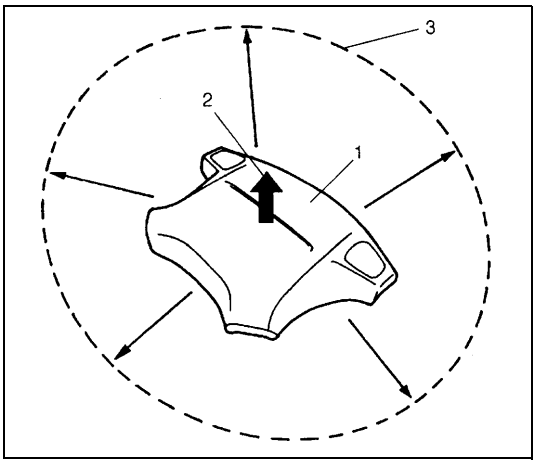

- For driver air bag (inflator) module

a) Clear space (3) on ground about 185 cm (6 ft) in diameter where driver air bag (inflator) module (1) for deployment. Paved, outdoor location where there is no activity is preferred. If outdoor location is not available, space on shop floor where there is no activity and provide sufficient ventilation. Ensure no loose or flammable objects are within deployment area.

b) Place driver air bag (inflator) module (1) with its vinyl trim cover facing up (2) on ground in step a).

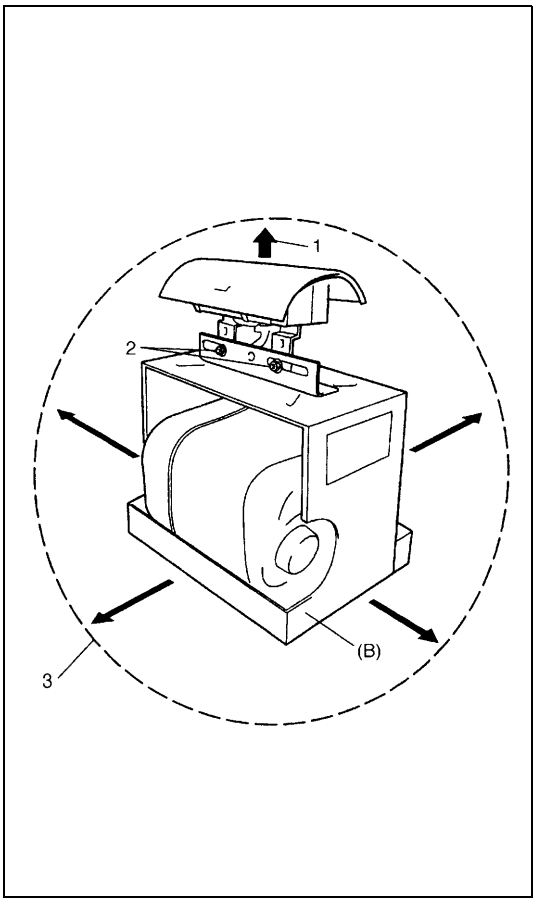

- For passenger air bag (inflator) module

a) Clear space (3) on ground about 185 cm (6 ft) in diameter where passenger air bag (inflator) module (1) for deployment. Paved, outdoor location where there is no activity is preferred. If outdoor location is not available, space on shop floor where there is no activity and provide sufficient ventilation. Ensure no loose or flammable objects are within deployment area.

b) Place deployment fixture (A) on ground in step a).

Special tool
(A) : 09932-75041

c) Fill plastic reservoir in deployment fixture (A) with water or sand. This is necessary to provide sufficient stabilization of fixture during deployment.

d) Attach passenger air bag (inflator) module (1) in deployment fixture (A) securely using mounting attachment, hold-down bolts & nuts and M8 bolts & nuts (2).

CAUTION:

Be sure to use M8 size and 7T strength bolt for fixing passenger air bag (inflator) module (1) to deployment fixture (A).

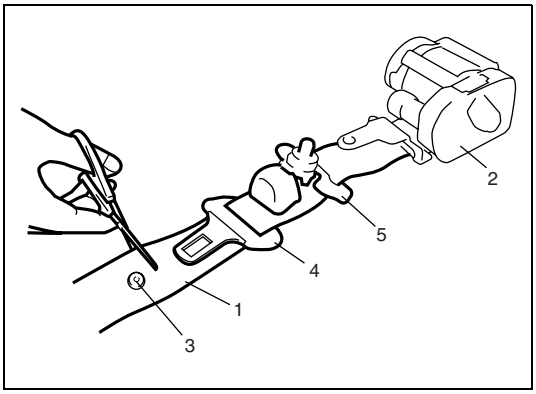

- For seat belt pretensioner

a) Cut webbing (1) at tongue plate stopper (3) of seat belt pretensioner (2) side as shown.

NOTE:

Hold seat belt pretensioner (2) vertically in the same condition as it is installed. Otherwise, webbing can't be pulled out.

b) Remove tongue plate (4) and shoulder anchor (5) from webbing.

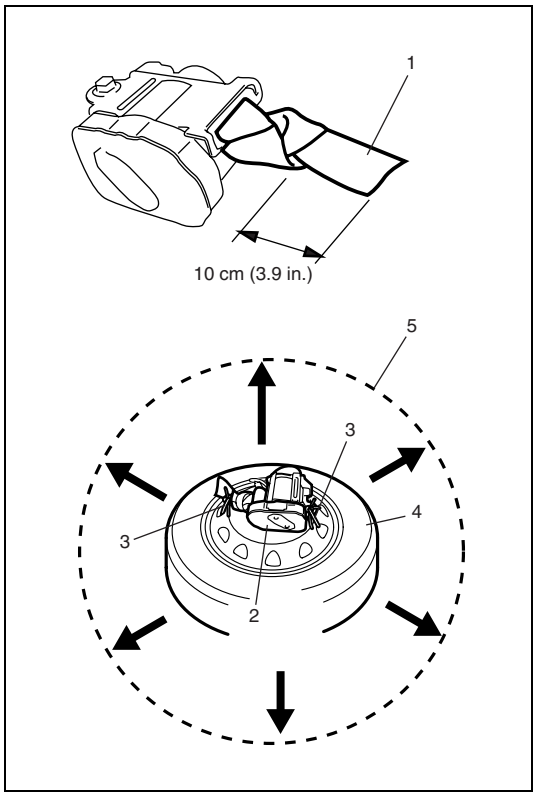

c) Tie webbing (1) tightly at 10 cm (3.9 in.) from cutting edge as shown.
d) Tie seat belt pretensioner (2) with wire harness (3) to wheel-installed tire (4) as shown.

Wire harness specification:

Stripped wire harness section 1.25 mm^2 (0.0019 in.^{2}) or more (Stripped wire harness diameter 1.25 mm (0.05 in.) or more)

NOTE:

Wind wire harness (3) around at least 3 times.

e) Clear space (5) on ground about 185 cm (6 ft) in diameter where seat belt pretensioner (2) is to be activated. Paved, outdoor location where there is no activity is preferred. If outdoor location is not available, space on shop floor where there is no activity and provide sufficient ventilation. Ensure no loose or flammable objects are within activation area.
f) Place wheel-installed tire (4) with seat belt pretensioner (2) on ground in step e).

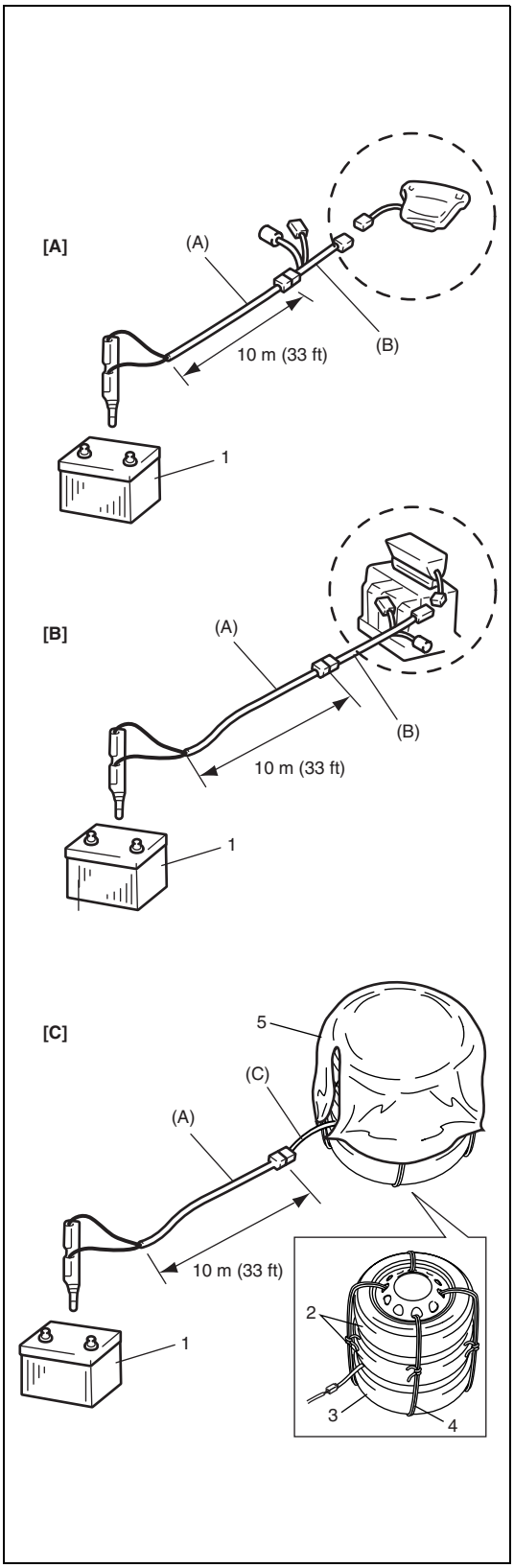

7) Stretch deployment harness (A) from air bag (inflator) module or seat belt pretensioner to its full length 10 m (33 ft).

Special tool
(A) : 09932-75031

8) Place 12 volts vehicle battery (1) near shorted end of deployment harness (A).
9) Verify that area around air bag (inflator) module or seat belt pretensioner is clear of all people and loose or flammable objects.
10) Connect adapter cable (B) or (C) as follows.

Special tool
(B) : 09932-78332
(C) : 09932-78320

- For driver air bag (inflator) module
  Verify that driver air bag (inflator) module is resting with its vinyl trim cover facing up, and connect adapter cable (B) to driver air bag (inflator) module.
- For passenger air bag (inflator) module
  Verify that passenger air bag (inflator) module is firmly and properly secured on deployment fixture (special tool), and connect adapter cable (B) to passenger air bag (inflator) module.
- For seat belt pretensioner

a) Connect adapter cable (C) to seat belt pretensioner.
b) Pile 2 wheel-installed tires (2) on top of tire with seat belt pretensioner (3), and tie them with wire harness (4) as shown.

Wire harness specification:

Stripped wire harness section 1.25 mm^2 (0.0019 in.^{2}) or more (Stripped wire harness diameter 1.25 mm (0.05 in.) or more)

NOTE:

Wind wire harness around at least 2 times.

c) Drape blanket (5) over those tires.

11) Connect adapter cable (B) or (C) to deployment harness (A) connector and lock connectors with lock lever.

[A] :	For driver air bag (inflator) module
[B] :	For passenger air bag (inflator) module
[C] :	For seat belt pretensioner

12) Notify all people in immediate area that you intend to deploy/ activate air bag (inflator) module or seat belt pretensioner.

NOTE:

- **When air bag (inflator) module deploys and seat belt pretensioner activates, rapid gas expansion will create substantial report. Wear suitable ear protection. Notify all people in immediate area that you intend to deploy air bag (inflator) module or activate seat belt pretensioner and suitable ear protection should be worn.**
- **When driver air bag (inflator) module deploys, driver air bag (inflator) module may jump about 30 cm (1 ft) vertically. This is normal reaction to force of rapid gas expansion inside of drive air bag (inflator) module.**
- **After air bag (inflator) module has been deployed, surface of air bag (inflator) may contain powdery residue. This powder consists primarily of cornstarch (used to lubricate bag (inflator) as it inflates) and byproducts of chemical reaction.**

WARNING:

- **Do not place deployed air bag (inflator) module and activated seat belt pretensioner near any flammable objects.**
- **Do not apply water, oil, etc. to deployed air bag (inflator) module and activated seat belt pretensioner.**
- **Wait for about 30 minutes before touching any metal surface of air bag (inflater) module or seat belt pretensioner module. Disregarding these precautions may cause fire or personal injury.**

Failure to follow procedures may result in fire or personal injury.

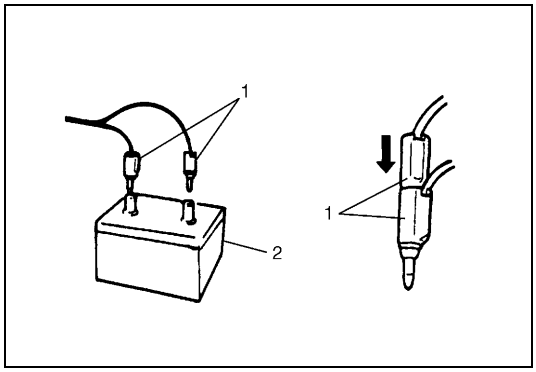

13) Separate two banana plugs (1) on deployment harness.
14) Connect deployment harness to 12 volts vehicle battery (2). This will immediately deploy or activate air bag (inflator) module or seat belt pretensioner.
15) Disconnect deployment harness from 12 volts vehicle battery (2) and short two deployment harness leads together by fully seating one banana plug into the other.

16) After confirming that air bag (inflator) module deployed and/or seat belt pretensioner activated, proceed to Step (7) through Step 21). In the unlikely event that air bag (inflator) module did not deploy or seat belt pretensioner did not activate, proceed to Step 22) through Step 25).
17) Put on pair of shop gloves to protect your hands from possible irritation and heat when handling deployed air bag (inflator) module or activated seat belt pretensioner.
18) Disconnect adapter cable (special tool) from air bag (inflator) module or seat belt pretensioner as soon as possible. This will prevent adapter cable (special tool) from damage due to possible contact with hot air bag (inflator) module or hot seat belt pretensioner.
19) Check adapter cable connector as follows.
    - For air bag (inflator) module
      Air bag (inflator) module connector of adapter cable (special tool) are designed to be reused. However they should be inspected for damage after deployment. Replace it with new adapter cable (special tool), if necessary.
    - For seat belt pretentioner
      Seat belt pretensioner connector of adapter cable (special tool) should be inspected for damage when seat belt pretensioner is activated. Replace it with spare connector (special tool), if necessary.

NOTE:

Do not reuse faulty seat belt pretensioner connector of adapter cable (special tool) because it can be destroyed by shock when seat belt pretensioner is activated.

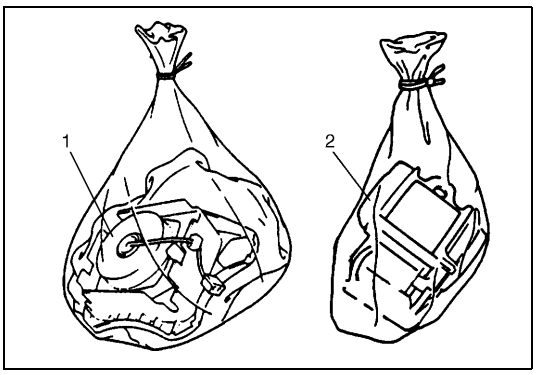

20) Dispose of deployed air bag (inflator) module (1) or activated seat belt pretensioner (2) through normal refuse channels after it has cooled for at least 30 minutes and tightly seal air bag (inflator) module (1) or seat belt pretensioner (2) in strong vinyl bag. (Refer to “Deployed Air Bag (Inflator) Module and Activated Seat Belt Pretensioner Disposal” in detail.)
21) Wash your hands with mild soap and water afterward.

NOTE:

Remaining steps are to be followed in the unlikely event that air bag (inflator) module did not deploy or seat belt pretensioner did not activate.

22) Ensure that deployment harness has been disconnected from 12 volts vehicle battery and that its two banana plugs have been shorted together by fully seating one banana plug into the other.
23) Disconnect deployment harness and adapter cable from air bag (inflator) module or seat belt pretensioner.

24) Temporarily store undeployed air bag (inflator) module or unactivated seat belt pretensioner referring to “Service Precautions” for details.
25) Contact your local distributor for further assistance.

Deployment/Activation Inside Vehicle

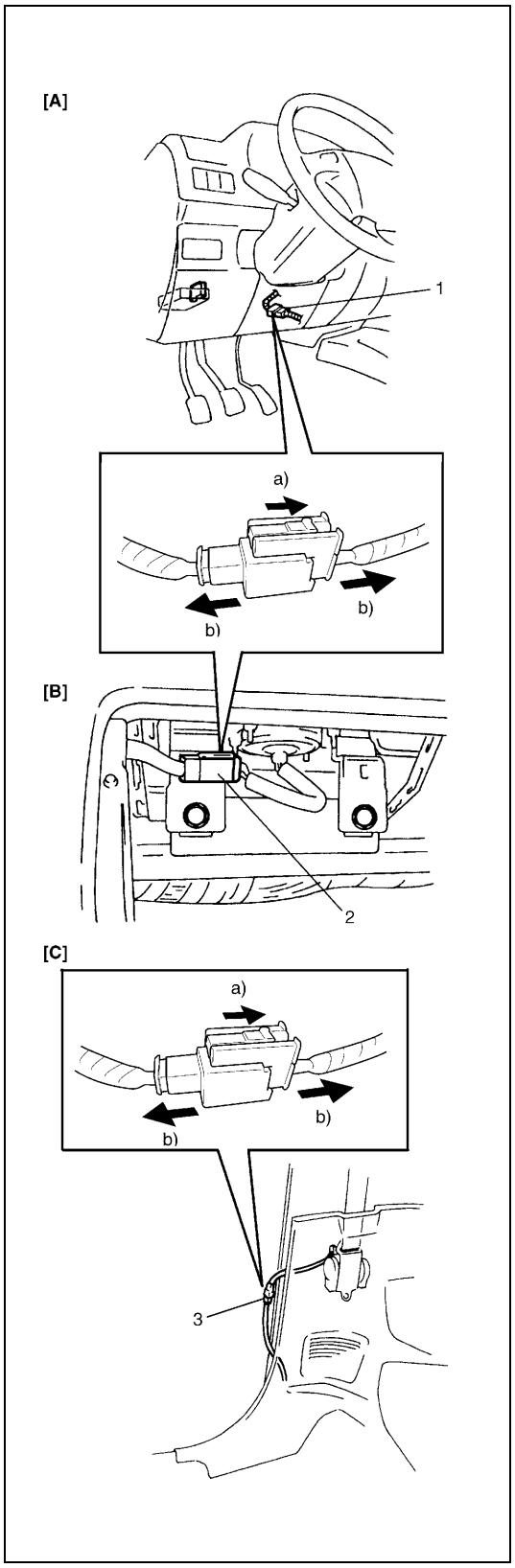

When the vehicle will be destroyed, or salvaged for component parts, deploy the air bag modules and activate seat belt pretensioners installed on vehicle.

1) Turn ignition switch to “LOCK” position, remove key and put on safety glasses.
2) Remove all loose objects from front seats and instrument panel.
3) Disconnect air bag (inflator) module or seat belt pretensioner connector as follows.
   - For driver air bag (inflator) module
     Disconnect contact coil connector (1) located near base of steering column.
   - For passenger air bag (inflator) module
     Remove glove box from instrument panel and disconnect passenger air bag (inflator) module connector (2).
   - For seat belt pretensioner
     Remove both side (driver and passenger side) quarter lower trims and disconnect seat belt pretensioner connectors (3).
4) Confirm that each air bag (inflator) module and seat belt pretensioner is securely mounted.

[A] :	Driver air bag (inflator) module
[B] :	Passenger air bag (inflator) module
[C] :	Seat belt pretensioner

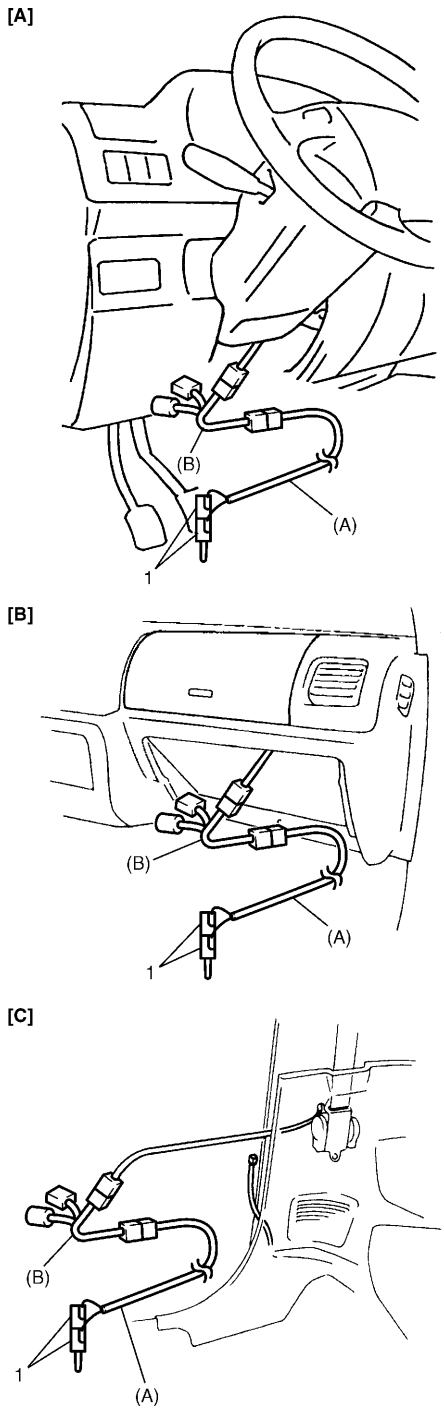

5) Check that there is no open, short or damage in special tools (deployment harness (A) and adapter cable (B)). If any faulty condition is found, do not use it and be sure to use new deployment harness (A) and/or adapter cable (B). And connect adapter cable (B) to deployment harness (A) and lock connectors with lock slider (2).

Special tool
(A) : 09932-75031
(B) : 09932-78332

6) Short two deployment harness leads (1) together by fully seating one banana plug into the other.

WARNING:
Deployment harness (A) shall remain shorted and not be connected to 12 volts vehicle battery until you are ready to deploy air bag (inflator) module or activate seat belt pretensioner.

7) Connect adapter cable (B) in series with deployment harness (A) to air bag (inflator) module or seat belt pretensioner as follows.
- For air bag (inflator) module
  Connect adapter cable (B) in series with deployment harness (A) and push adapter cable (B) connector to air bag (inflator) module connector (driver, passenger or side of driver and passenger) till click can be heard.
- For seat belt pretensioner
  Connect adapter cable (B) in series with deployment harness (A) to seat belt pretensioner and lock connector with lock part.

[A] :	Driver air bag (inflator) module
[B] :	Passenger air bag (inflator) module
[C] :	Seat belt pretensioner

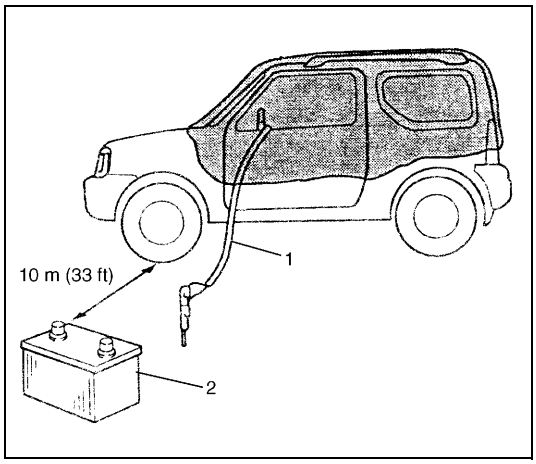

8) Route deployment harness (1) out of vehicle.
9) Verify that inside of vehicle and area surrounding vehicle are clear of all people and loose or flammable objects.
10) Stretch deployment harness (1) to its full length 10 m (33 ft).
11) Place 12 volts vehicle battery (2) near shorted end of deployment harness (1).
12) Completely cover windshield area and front door window openings with drop cloth, a blanket or any similar item (3). This reduces possibility of injury due to possible fragmentation of vehicle's glass or interior.
13) Notify all people in immediate area that you intend to deploy air bag (inflator) module or activate seat belt pretensioner.

NOTE:

- **When air bag (inflator) module deploys or seat belt pretensioner activates, rapid gas expansion will create substantial report. Wear suitable ear protection. Notify all people in immediate area that you intend to deploy air bag (inflator) module or to activate seat belt pretensioner and suitable ear protection should be worn.**
- **After air bag (inflator) module has been deployed, surface of air bag may contain powdery residue. This powder consists primarily of cornstarch (used to lubricate air bag (inflator) module as it inflates) and by-products of chemical reaction.**

WARNING:

- **Do not place deployed air bag (inflator) module and activated seat belt pretensioner near any flammable objects.**
- **Do not apply water, oil, etc. to deployed air bag (inflator) module and activated seat belt pretensioner.**
- **Wait for about 30 minutes before touching any metal surface of air bag (inflater) module or seat belt pretensioner module. Disregarding these precautions may cause fire or personal injury.**

Failure to follow procedures may result in fire or personal injury.

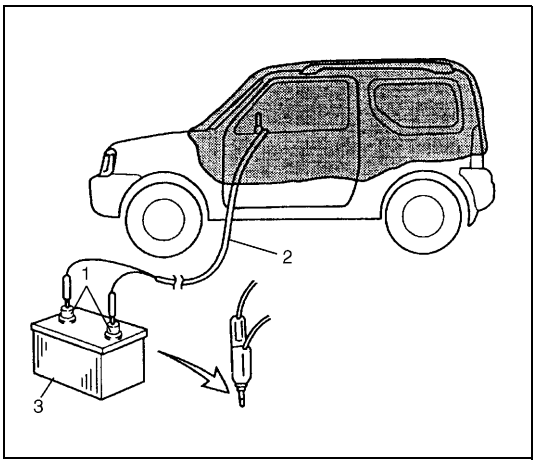

14) Separate two banana plugs (1) on deployment harness (2).
15) Connect deployment harness (2) to 12 volts vehicle battery (3). This will immediately deploy or activate air bag (inflator) module or seat belt pretensioner.
16) Disconnect deployment harness (2) from 12 volts vehicle battery (3) and short two deployment harness leads together by fully seating one banana plug into the other.

17) Repeat Step 3) through Step 16) to deploy/activate air bag (inflator) modules and seat belt pretensioners which has not been deployed/activated, if any.
18) After confirming that air bag (inflator) module and seat belt pretensioner deployed and/or activated, proceed to Step 19) through Step 23). In the unlikely event that air bag (inflator) module did not deploy or seat belt pretensioner did not activate, proceed to Step 24) through Step 26).
19) Carefully remove drop cloth from vehicle and clean off any fragments or discard it entirely.
20) Put on pair of shop gloves to protect your hands from possible irritation and heat when handling deployed air bag (inflator) module and activated seat belt pretensioner.
21) Disconnect adapter cable (special tool) from air bag (inflator) module or seat belt pretensioner as soon as possible. This will prevent adapter cable (special tool) from damage due to possible contact with hot air bag (inflator) module or hot seat belt pretensioner.
22) Check adapter cable connector as follows.
    Adapter cable connector (special tool) are designed to be reused. However they should be inspected for damage after deployment and replaced if necessary.
23) Scrap the vehicle in the same manner as the vehicle without air bag system.

NOTE:

Remaining steps are to be followed in the unlikely event that air bag (inflator) module did not deploy or seat belt pretensioner did not activate.

24) Remove undeployed air bag (inflator) module(s) and/or inactivated seat belt pretensioner(s) from vehicle as follows.
    - For driver air bag (inflator) module
      Remove driver air bag (inflator) module referring to “Driver Air Bag (Inflator) Module” in Section 3C.
    - For passenger air bag (inflator) module
      Remove passenger air bag (inflator) module referring to “Passenger Air Bag (Inflator) Module” in this section.

- For seat belt pretensioner
  Remove seat belt referring to “Front Seat Belt with Pretensioner” in Section 10.

25) Temporarily store undeployed air bag (inflator) module and/or unactivated seat belt pretensioner referring to “Service Precautions” in this section.
26) Contact your local distributor for further assistance.

Deployed Air Bag (Inflator) Module and Activated Seat Belt Pretensioner Disposal

WARNING:

Failure to follow proper air bag (inflator) module and seat belt pretensioner disposal procedures can result in air bag deployment and pretensioner activation which may cause personal injury. The undeployed air bag (inflator) module and the inactivated seat belt pretensioner must not be disposed of through normal refuse channels.
The undeployed air bag (inflator) module and the inactivated seat belt pretensioner contains substances that can cause severe illness or personal injury if the sealed container is damaged during disposal.

Deployed air bag (inflator) module and the activated seat belt pretensioner can be disposed of through normal refuse channels just like any other parts. For their disposal, however, the following points should be noted.

- The air bag (inflator) module and the seat belt pretensioner immediately after deployment/activation is very hot. Wait for 30 minutes to cool it off before handling it.
- Never apply water, oil, etc. to deployed air bag (inflator) module and the activated seat belt pretensioner to cool it off and be careful so that water, oil etc. does not get on the deployed air bag (inflator) module and the activated seat belt pretensioner.
- After the air bag (inflator) module has been deployed, the surface of the air bag may contain a powdery residue. This powder consists primarily of cornstarch (used to lubricate the bag as it inflates) and by-products of the chemical reaction. As with many service procedures, you should wear gloves and safety glasses.

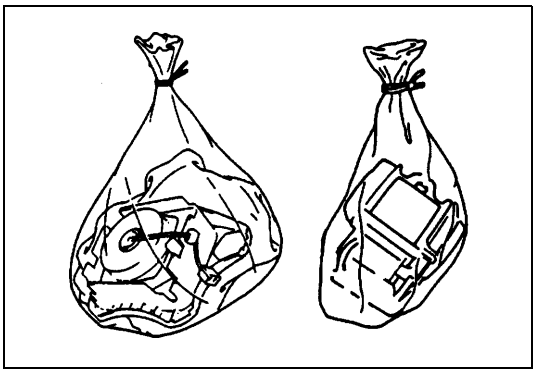

- When disposing of the deployed air bag (inflator) module and the activated seat belt pretensioner, be sure to seal it in a vinyl bag.
- When air bag (inflator) module and seat belt pretensioner have been deployed/activated inside the vehicle which is going to be scrapped, leave them as installed to the vehicle.
- Be sure to wash your hands with mild soap and water after handling it.

Tightening Torque Specification

Fastening part	Tightening torque		
	N•m	kg-m	lb-ft
SDM mounting bolt	6	0.6	4.5
Passenger air bag (inflator) module bolt	23	2.3	16.5

Special Tool

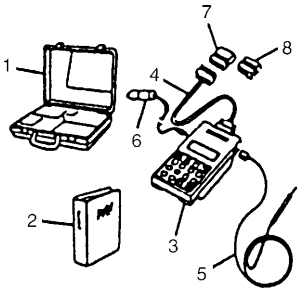 09931-76011 Tech 1A kit (SUZUKI scan tool) (See NOTE “A”.)	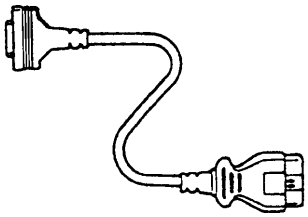 09931-76030 16/14 pin DLC cable for Tech 1A	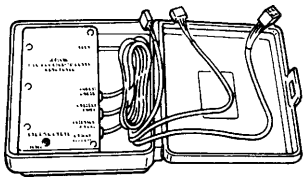 09932-75010 Air bag driver/passenger load tool	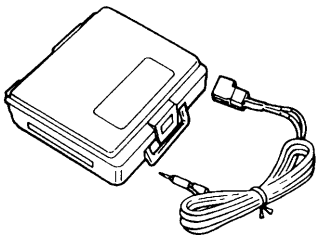 09932-75031 Air bag deployment harness
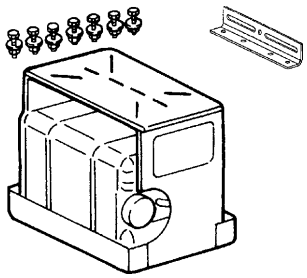 09932-75041 Passenger air bag (inflator) module deployment fixture	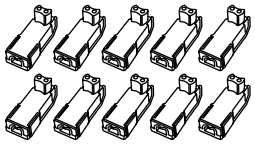 09932-75420 Spare connector (See NOTE “E”.)	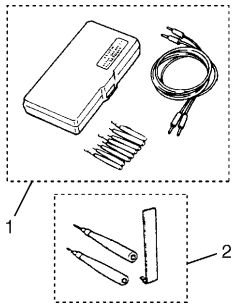 09932-76010 Connector test adapter set (See NOTE “D”.)	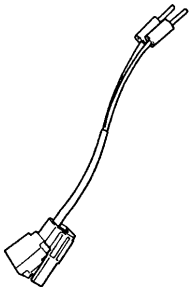 09932-78310 Adapter cable

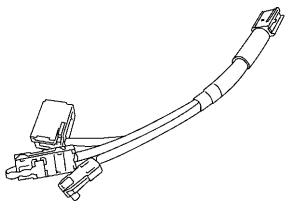 09932-78320 Adapter cable	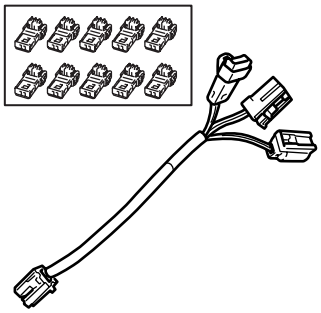 09932-78332 Adapter cable	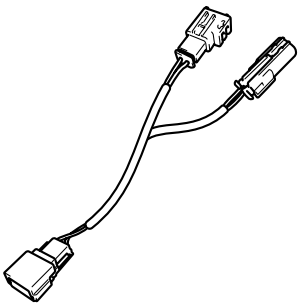 09932-78340 Adapter cable	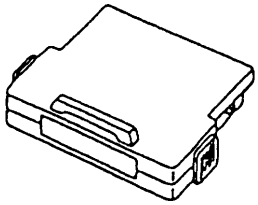 Mass storage cartridge for Tech 1A
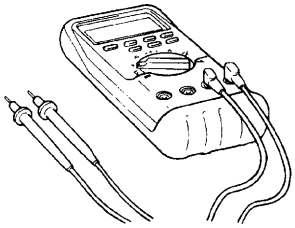 Digital multimeter (See NOTE “B” and WARNING.)	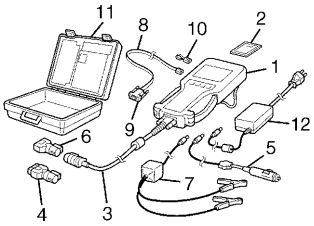 Tech 2 kit (SUZUKI scan tool) (See NOTE “C”.)		

WARNING:

Be sure to use the specified digital multimeter. Otherwise, air bag (inflator) module deployment or personal injury may result.

NOTE:

- **“A” : This kit includes the following items and substitutes for the Tech 2 kit.**
  1. Storage case, 2. Operator’s manual, 3. Tech 1A, 4. DLC cable, 5. Test lead/probe, 6. Power source cable, 7. DLC cable adapter, 8. Self-test adapter
- **“B” : Digital multimeter specification : Maximum test current is 10 mA or less at minimum range of resistance measurement.**
- **“C” : This kit includes the following items and substitutes for the Tech 1A kit.**
  1. Tech 2, 2. PCMCIA card, 3. DLC cable, 4. SAE 16/19 adapter, 5. Cigarette cable, 6. DLC loopback adapter, 7. Battery power cable, 8. RS232 cable, 9. RS232 adapter, 10. RS232 loopback connector, 11. Storage case, 12. Power supply
- **“D” : This set includes the following items.**
  1. Connector test adapter kit (09932-75020), 2. Connector test adapter & shorting bar release tool (09932-76020)
- **“E” : These connector are spare connector for adaptor cable (09932-78320).**

Prepared by

SUZUKI MOTOR CORPORATION

1st Ed. January, 2002

Printed in Japan

Printing: January, 2002 XXXX